NOTE TO USERS

This reproduction is the best copy available.

UMI ®

UNIVERSITÉ DE MONTRÉAL

LES EFFETS DES DÉFORMATIONS EN CISAILLEMENT ET DE L'INERTIE DE ROTATION SUR LE COMPORTEMENT DYNAMIQUE DES COQUES NONUNIFORMES, ANISOTROPES ET CONTENANT UN LIQUIDE EN ÉCOULEMENT

MOHAMMAD H. TOORANI
DÉPARTEMENT DE GÉNIE MÉCANIQUE
ÉCOLE POLYTECHNIQUE DE MONTRÉAL

THÈSE PRÉSENTÉE EN VUE DE L'OBTENTION
DU DIPLÔME DE PHILOSOPHIAE DOCTOR
(GÉNIE MÉCANIQUE)
AOÛT 1999

©Mohammad H. Toorani, 1999.

National Library of Canada
Bibliothèque nationale du Canada

Acquisitions and Bibliographic Services
Acquisitions et services bibliographiques

395 Wellington Street
Ottawa ON K1A 0N4
Canada

395, rue Wellington
Ottawa ON K1A 0N4
Canada

Your file Votre référence

Our file Notre référence

The author has granted a non-exclusive licence allowing the National Library of Canada to reproduce, loan, distribute or sell copies of this thesis in microform, paper or electronic formats.

L'auteur a accordé une licence non exclusive permettant à la Bibliothèque nationale du Canada de reproduire, prêter, distribuer ou vendre des copies de cette thèse sous la forme de microfiche/film, de reproduction sur papier ou sur format électronique.

The author retains ownership of the copyright in this thesis. Neither the thesis nor substantial extracts from it may be printed or otherwise reproduced without the author's permission.

L'auteur conserve la propriété du droit d'auteur qui protège cette thèse. Ni la thèse ni des extraits substantiels de celle-ci ne doivent être imprimés ou autrement reproduits sans son autorisation.

0-612-53546-0

Canada

UNIVERSITÉ DE MONTRÉAL

ÉCOLE POLYTECHNIQUE DE MONTRÉAL

Cette thèse intitulée:

LES EFFETS DES DÉFORMATIONS EN CISAILLEMENT ET DE L'INERTIE DE ROTATION SUR LE COMPORTEMENT DYNAMIQUE DES COQUES NONUNIFORMES, ANISOTROPES ET CONTENANT UN LIQUIDE EN ÉCOULEMENT

présentée par: TOORANI Mohammad H.

en vue de l'obtention du diplôme de : Philosophiae Doctor

a été dûment acceptée par le jury d'examen constitué de :

M. **ROUSSELET Jean** , Ph.D., président

M. **LAKIS Aouni A.** , Ph.D. , membre et directeur de recherche

M. **OSTIGUY Germain** , Ph.D. , membre

M. **AMABILI Marco** , Ph.D. , membre

À ma famille,
À ma mère,
À la mémoire de mon père.

REMERCIEMENTS

Je tiens à adresser mes remerciements à toutes les personnes qui m'ont aidé et soutenu moralement ou techniquement pour finir cette thèse. Je tiens tout d'abord à remercier plus sincèrement mon directeur de recherche, Monsieur le professeur Aouni A. Lakis, pour son soutien constant et son apport considérable jusqu'à l'accomplissement de ce travail.

Je veux également souligner ma reconnaissance envers les membres du jury, Messieurs les professeurs Jean Rousselet Germain Ostiguy et Marco Amabili pour le temps qu'ils ont consacré à la lecture et à la critique de cette thèse. Le support financier alloué par M.C.H..E. (Ministry of Culture and Higher Education of Iran) et mon professeur est grandement apprécié.

Je veux enfin remercier mon épouse qui, tant dans les bons moments que dans les mauvais, a été très compréhensive et patiente et n'a jamais cessé de m'encourager dans la réalisation de mon projet et aussi mes enfants, Tahmineh et Amir, qui ont reçu moins de leur part d'attention au cours de ces années.

RÉSUMÉ

L'analyse statique et dynamique des plaques et des coques minces, vides ou remplies de fluide a été le sujet de plusieurs recherches. Beaucoup de travaux ont étudié les plaques et les coques en considérant différents facteurs tels que la variation d'épaisseur, l'anisotropie des matériaux, l'imperfection géométrique, l'effet du milieu environnant, etc. La plupart de ces études traitent de l'analyse linéaire, avec ou sans l'interaction entre ces structures et le milieu du fluide, des plaques ou des coques fermées selon les premières approximations de la théorie de Love-Kirchhoff.

Aucun travail d'analyse basé sur une théorie où les effets des déformations de cisaillement et de l'inertie de rotation aussi bien que ceux de la courbure initiale sont pris en considération n'a encore été fait pour l'analyse des coques cylindriques ouvertes et anisotropes laminées et remplies de fluide, ou soumise à un liquide en écoulement. Nous proposons de développer analytiquement les équations d'équilibre, les relations constituantes et les relations cinématiques qui décrivent le comportement des coques de forme générale, fabriquées avec des matériaux anisotropes, laminées multicouches en considérant les effets des déformations de cisaillement, ceux de l'inertie de rotation ainsi que de la courbure initiale.

Par la suite, ces équations sont appliquées aux différentes géométries de coque, comme les coques de révolution, cylindriques, sphériques et coniques aussi bien que les plaques rectangulaires et circulaires. Finalement, nous étudions les vibrations libres des coques cylindriques vides ou remplies (partiellement ou complètement) d'un liquide, ou soumises à un écoulement d'un fluide nonvisqueux et incompressible interne ou externe. La stabilité dynamique des coques cylindriques est aussi analysée.

La méthode développée est une combinaison de la méthode des éléments finis hybrides, de la théorie des déformations de cisaillement des coques et de celle des fluides. Les coques cylindriques ouvertes ont des conditions frontières arbitraires sur les rives droites et elles sont simplement supportées selon leur rives courbes.

La première partie de ce travail traite de l'analyse linéaire des coques anisotropes laminées et multicouches de forme générale, analyse basée sur la théorie des déformations de cisaillement, avec les seules hypothèses de négliger la contrainte normale. Les résultats qui incluent les effets des déformations de cisaillement et l'inertie de rotation aussi bien que les effets de la courbure initiale sont déduits par l'application du principe du travail virtuel, avec les déplacements et les rotations comme variables indépendantes. Ces équations sont donc appliquées aux différentes géométries de coque telles que les coques de révolution, cylindriques, sphériques et coniques aussi bien que les plaques rectangulaires et circulaires.

Dans la seconde partie de cette thèse, nous appliquons la présente théorie pour

l'analyse statique et dynamique des coques cylindriques minces élastiques et anisotropes laminées multicouches. L'analyse prend en compte les effets des déformations de cisaillement, de l'inertie de rotation aussi bien que de la courbure initiale. La méthode utilisée est une combinaison de la méthode des éléments finis hybrides et de la théorie des déformations de cisaillement des coques. La coque est divisée en plusieurs éléments finis de type cylindrique et les fonctions de déplacement sont dérivées de la théorie des coques cylindriques minces en coordonnées curvilignes orthogonales.

L'ensemble des matrices, les matrices de masse et de rigidité, qui décrivent leurs contributions relatives à l'équilibre sont déterminées par intégration analytique exacte. Cette théorie donne les déformations nulles pour le mouvement du corps rigide afin que les fonctions des déplacements basées sur cette théorie satisfassent le critère de la convergence de la méthode des éléments finis. Cette théorie conduit à cinq équations différentielles du deuxième ordre, couplées et linéaires avec les coefficients constants. Elles sont résolues conjointement avec cinq conditions aux rives à chaque bord par la méthode des éléments finis hybrides. Les résultats obtenus concordent de façon raisonnable avec d'autres théories.

La troisième partie de cette recherche traite des vibrations libres des coques cylindriques minces, ouvertes ou fermées, anisotropes laminées aussi bien qu'isotropes, remplies (partiellement ou complètement) d'un liquide ou submergées et soumises simultanément à un écoulement d'un fluide nonvisqueux et incompressible interne et externe. Dans cette approche, les déplacements et les rotations de coque, et la pression dynamique du

fluide sont modélisés par la méthode des éléments finis hybrides. Les fonctions du déplacement sont dérivées de la solution exacte d'équations de la coque basées sur les coordonnées curvilignes orthogonales.

Le potentiel de vitesse, l'équation de Bernoulli et l'imperméabilité linéaire appliquée à l'interface de fluide-structure ont été utilisés afin de décrire une expression explicite pour la pression du fluide, menant à trois forces (inertielle, centrifuge et de Coriolis) du fluide en mouvement. Les matrices de masse, de rigidité et d'amortissement dues à l'effet du fluide peuvent être obtenues par une intégration analytique de la pression du fluide sur l'élément liquide. Divers résultats de calcul ont été obtenus pour illustrer la théorie et le comportement dynamique des coques cylindriques ouvertes et fermées, partiellement ou complètement remplies de liquide ou soumises à un écoulement. Les résultats numériques prédits par présente théorie concordent de façon raisonnable avec les résultats obtenus avec l'application d'autres théories.

Cette méthode combine les avantages de la méthode des éléments finis, qui traite des coques complexes et la précision de la formulation basée sur des fonctions de déplacement dérivées de la théorie de cisaillement des coques. Sur la base de cette nouvelle théorie, nous avons donc un modèle puissant qui peut prédire les caractéristiques vibratoires des coques cylindriques ouvertes ou fermées, anisotropes et soumises à un fluide en écoulement.

ABSTRACT

The static and dynamic analysis of thin plates and shells, empty or fluid-filled, has been the focus of many researches. There are many works in which the plates and shells were studied by considering different factors as like the thickness variation, anisotropic materials, geometric imperfection and the effect of surrounding medium, etc. Most of these theories were originally developed for linear analysis of the plates or the closed shells, empty or fluid-filled, based on the first approximations of Love-Kirchhoff theory. This theory could lead to unrealistic prediction of transverse deflection, natural frequencies and buckling load due to neglecting of transverse shear deformations effects. No work has been made to analyse the anisotropic laminated open cylindrical shells filled with or subjected to a flowing fluid by taking into account the effects of shear deformations and rotatory inertia as well as initial curvature effects.

Therefore, the first purpose of this study is to develop the general equations, equilibrium equations, kinematic and constitutive relations, of multi-layered laminated anisotropic shells by considering the effects of the above mentioned parameters. Afterwards, the developed equations are applied to different geometries as revolution, cylindrical,

spherical and conical shells as well as rectangular and circular plates. Finally, free vibrations of anisotropic open cylindrical shells filled(partially or completely) with or subjected to an internal or external incompressible, inviscid fluid are analysed by using a combination of hybrid finite element analysis, the refined shear deformation theory of shells and theory of fluids. The open shells are assumed to have arbitrary straight edge boundary conditions and to be simply-supported along their curved edges. The dynamic stability of cylindrical shells is also analysed.

The first part of this study deals with a generalization of geometrically linear shear deformation theory for multilayered anisotropic shells of general shape. The only assumption made is to neglect the transverse normal strain. The results, which include the effects of shear deformations, rotatory inertia and initial curvature are deduced by application of the virtual work principle, with displacements and transverse shear as independent variables. These equations are applied to different shell geometries, such as revolution, cylindrical, spherical and conical shells as well as rectangular and circular plates.

In the second part of this thesis, the developed theory is applied to static and dynamic analysis of thin laminated anisotropic cylindrical shells. This theory yields five coupled linear second-order differential equations with constant coefficients. They are solved in conjunction with five boundary conditions at each edge by a combination of hybrid finite

element analysis and shear deformation theory of shells. The shell is subdivided into cylindrical finite elements and the displacement functions are obtained using the shell equations based on orthogonal curvilinear coordinates. The set of matrices describing their relative contributions to equilibrium is determined by exact analytical integration. This theory gives zero strains for rigid-body motions so that the displacements functions based on it satisfy the convergence criteria of the finite element method. Reasonable agreement is found with other theories.

The third part of this research deals with the free vibration of anisotropic laminated composite open or closed cylindrical shells filled (partially or completely) or submerged in and subjected simultaneously to an internal and external incompressible, inviscid fluid. In this approach, displacements and rotations of the shell and the dynamic pressure of the fluid are modelled by hybrid finite element method. The displacement functions are derived from the exact solution of refined shell equations based on orthogonal curvilinear coordinates. The velocity potential, Bernoulli's equation and linear impermeability condition, applied to fluid-structure interface, have been used to describe an explicit expression for fluid pressure which yield three forces (inertia, centrifugal and Coriolis) of the moving fluid. The mass, stiffness and damping matrices due to fluid effect can be obtained by an analytical integration of the fluid pressure over the liquid element. Extensive results of computations are carried out to illustrate the theory and dynamic behaviour of open and closed cylindrical shells partially

or completely filled with liquid, or subjected to a flowing fluid. A satisfactory agreement is found between the numerical results predicted by the present theory and the results of previous works.

This method combines the advantage of finite element approach dealing with complex shells and the precision of formulation using displacement functions derived from refined shear deformation theory of shells. Hence, a powerful model based on a developed theory is presented to predict the vibration characteristics of anisotropic open or closed cylindrical shells subjected to a flowing fluid.

TABLE DES MATIÈRES

DÉDICACE....iv

REMERCIEMENTS....v

RÉSUMÉ....vi

ABSTRACT....x

TABLE DES MATIÈRES....xiv

LISTE DES TABLEAUX....xx

LISTE DES FIGURES....xxi

INTRODUCTION....1

Chapitre I REVUE BIBLIOGRAPHIQUE....9

1.1 Matériaux anisotropes....9

1.2 Les théories classiques des coques....12

1.3 Les effets des déformations de cisaillement dans l'analyse des plaques et des coques....21

1.4 Étude de l'interaction dans un système couplé structure-fluide....30

1.5 Les méthodes de solution....33

Chapitre II Article I: GENERAL EQUATIONS OF ANISOTROPIC PLATES AND SHELLS INCLUDING TRANSVERSE SHEAR DEFORMATIONS, ROTATORY INERTIA AND INITIAL CURVATURE EFFECTS.....39

2.1 Abstract.....39

2.2 Introduction.....39

2.3 Literature Review.....41

2.4 Theoretical Development.....76

2.4.1 Strain-Displacement Relations.....77

2.4.2 The Relationships Between the Stress and Strain Vectors.....80

2.4.3 The Equations of Motion.....83

2.4.4 The Stress Resultant and Stress Couples.....84

2.4.5 The Constitutive Equations.....85

2.5 Shells of Revolution.....88

2.5.1 The Equilibrium Equations.....88

2.5.2 Constitutive Equations.....88

2.5.3 Kinematic Relations (Linear Strain-Displacement Relations).....88

2.6 Cylindrical Shells.....89

2.6.1 The Equilibrium Equations....89

2.6.2 Constitutive Equations....90

2.6.3 Kinematic Relations (Linear Strain-Displacement Relations)....90

2.7 Rectangular Plates....91

2.7.1 Equilibrium Equations....91

2.7.2 Constitutive Equations....91

2.7.3 Kinematic Relations (Linear Strain-Displacement Relations)....92

2.8 Spherical Shells....92

2.8.1 Equilibrium Equations....92

2.8.2 Constitutive Equations....93

2.8.3 Kinematic Relations....93

2.9 Conical Shells....94

2.9.1 Equilibrium Equations....94

2.9.2 Constitutive Equations....94

2.9.3 Kinematic Relations (Linear Strain-Displacement Relations)....94

2.10 Circular Plates....95

2.10.1 Equilibrium Equations....95

2.10.2 Constitutive Equations....96

2.10.3 Kinematic Relations (Linear Strain-Displacement Relations)....96

2.11 Characteristic Equation....96

2.12 Discussion and Conclusion....100

2.13 Appendix A-2....102

2.14 Appendix B-2....106

2.15 Appendix C-2....107

2.16 Appendix D-2....112

2.17 Appendix E-2....114

2.18 References....116

2.19 Nomenclature....143

Chapitre III Article II: TRANSVERSE SHEAR DEFORMATION IN FREE VIBRATION ANALYSIS OF ANISOTROPIC OPEN CIRCULAR CYLINDRICAL SHELLS....157

3.1 Abstract....157

3.2 Introduction....158

3.3 Basic Theory and Method....164

3.3.1 Kinematic....166

3.3.2 Constitutive Relations....168

3.4 Fundamental Equation for Open Cylindrical Shells....171

3.4.1 The Equations of Motion....171

3.4.2 The Stress Resultant and Stress Couples....172

3.4.3 The Constitutive Equations....173

3.5 The Displacement Functions....176

3.6 Determination of Mass and Stiffness Matrices for an Element....181

3.7 Stiffness and Mass Matrices for the Whole Shell in Vacuo....184

3.8 Free Vibration....185

3.9 Calculations and Discussions....186

3.10 Conclusion....191

3.11 Appendix A-3....193

3.12 References....199

3.13 Nomenclature....205

Chapitre IV Article III: SHEAR DEFORMATION IN DYNAMIC ANALYSIS OF ANISOTROPIC LAMINATED OPEN CYLINDRICAL SHELLS FILLED WITH OR SUBJECTED TO A FLOWING FLUID....234

4.1 Abstract....234

4.2 Introduction....235

4.3 Structural Formulation....241

4.3.1 Basic Equations of the Shell....241

4.3.2 Determination of Mass and Stiffness Matrices for Empty Finite Elements...246

4.4 Dynamic Fluid-Structure Interaction Behaviour....248

4.4.1 Assumptions....248

4.4.2 Equations of Motion....248

4.4.3 Determination of the Mass, Stiffness and Damping Matrices of the Moving Fluid....250

4.5 Analysis of Free Vibration....257

4.6 Numerical Results and Discussion....258

4.7 Conclusion....265

4.8 Appendix A-4....268

4.9 Appendix B-4....271

4.10 References....275

4.11 Nomenclature....282

CONCLUSION....310

BIBLIOGRAPHIE....318

LISTE DES TABLEAUX

Table 2.1 Roots of characteristic equation for $12R^2(1-\nu^2)/t^2=4\times10^4$ and $\nu=0.3$.....146

Table 2.2 Roots of characteristic equations(2.48 and 2.49) for isotropic materials(m=1).....147

Table 2.3 Roots of characteristic equations (2.48 and 2.49) for anisotropic materials (0°/90°/90°/0°).....147

Table 3.1 Non-dimensional fundamental frequencies (m=1) of simply-supported cylindrical shells with symmetric cross-ply 0°/90°/90°/0° $\Omega = \omega_0 R^2 \sqrt{\rho / E_2} / t$ 208

Table 3.2 Properties of the shell layers.....208

Table 4.1 Free vibration (Hz) of a cylindrical shell simply supported at both ends.....286

LISTE DES FIGURES

Figure 1.1 (a) La géométrie et notation utilisées pour un laminé

(b) La construction d'un laminé.....37

Figure 1.2 (a) Un laminé symétrique de couches orthogonales

(b) Un laminé symétrique de couches croisées.....38

Figure 2.1 (a) Differential element of a shell

(b) Definition of shell coordinate system.....148

Figure 2.2 Unidirectional lamina and principal coordinate axes.....149

Figure 2.3 (a) Multidirectional laminate with coordinate notation of individual plies

(b) A fibre reinforced lamina with global and material coordinate systems...50

Figure 2.4 Surface of revolution.....151

Figure 2.5 (a) Circular cylindrical shell geometry

(b) Positive direction of integrated stress quantities.....152

Figure 2.6 Force and moment resultant on a plate element.....153

Figure 2.7 Geometry of spherical shell.....154

Figure 2.8 Geometry of conical shell.....155

Figure 2.9 Circular plate element.....156

Figure 3.1 Segment MN deforms to M*N* through displacement vector $\bar{u}$ 209

Figure 3.2 Surface and shell coordinate system.....210

Figure 3.3 Unidirectional lamina and principal coordinate axes.....211

Figure 3.4 (a) Multidirectional laminate with coordinate notation of individual plies

(b) A fibre reinforced lamina with global and material coordinate systems.212

Figure 3.5 (a) Circular cylindrical shell geometry

(b) Positive directions of integrated stress quantities.....213

Figure 3.6 (a) Finite element discretization

(b) Nodal displacement at node ***i*** for the ***m***'th element. **N**: number of elements

(c) Definition of variables.....214

Figure 3.7 Frequency distribution ($\Omega=\omega_o R^2 (\rho/E_2)^{1/2}/t$) for various axial wave number

(***m***) for anisotropic (0°/90°/90°/0°)cylinder.....215

Figure 3.8 Variation of non-dimensional natural frequencies ($\Omega= \omega_o R^2 (\rho/E_2)^{1/2}/t$) in

conjunction with variation of (***m***).....216

Figure 3.9 Variation of non-dimensional natural frequencies ($\Omega=\omega/\omega_o$, $\omega_o=(A_{22}/(\rho R^2))^{1/2}$)

in terms of the ***n*** variation (***m***=7).....217

Figure 3.10 Variation of non-dimensional natural frequencies ($\Omega=\omega_o R(\rho(1-\upsilon^2)/E)^{1/2}$) in

terms of the circumferential wave number and ***m*** variations.....218

Figure 3.11 Variation of non-dimensional natural frequencies ($\Omega=\omega_o R(\rho(1-\upsilon^2)/E)^{1/2}$)

in terms of the ***n*** and ***R/t*** Variations (***m***=3).....219

Figure 3.12 Variation of non-dimensional natural frequency ($\Omega=\omega_o R(\rho(1-\upsilon^2)/E)^{1/2}$) in

conjunction with ***R/t*** and ***m*** variations(isotropic materials).....220

Figure 3.13 Variation of non-dimensional natural frequency ($\Omega=\omega_o R(\rho(1-\upsilon^2)/E)^{1/2}$) in terms of ***L/R*** and ***m*** variations (isotropic materials).....221

Figure 3.14 The effect of the length to thickness ratio on the non-dimensional frequency ($\Omega=\omega_o L^2(\rho/E_2)^{1/2}/t$) of three layered (0°/90°/0°) anisotropic cylindrical shells.....222

Figure 3.15 Variation of non-dimensional natural frequency ($\Omega=\omega_o R^2(\rho/E_2)^{1/2}/t$) of anti-symmetric cross-ply (0°/90°) laminated cylindrical shells in conjunction with ***L/R*** and ***m*** variations.....223

Figure 3.16 Variation of non-dimensional natural frequency of cross-ply (0°/90°) cylindrical shells ($\Omega=\omega_o R^2(\rho/E_2)^{1/2}/t$) in terms of the ***L/R***'s variations.....224

Figure 3.17 Variation of non-dimensional natural frequency of cross-ply (0°/90°) cylindrical shells ($\Omega=\omega_o R^2(\rho/E_2)^{1/2}/t$) in terms of the ***L/R***'s variations.....225

Figure 3.18 Frequency distribution ($\Omega=\omega_o R^2(\rho/E_2)^{1/2}/t$) for various axial wave number (***m***) of symmetric cross-ply (0°/90°/90°/0°)laminated cylindrical shells.....226

Figure 3.19 Variation of non-dimensional frequency ($\Omega=\omega_o L^2(\rho/E_2)^{1/2}/t$) of symmetric cross- ply laminated cylindrical shells in conjunction with ***L/R*** and ***L/t*** variations.....227

Figure 3.20 Frequency distribution (Ω/Ω_o, $\Omega_o=\pi(G/\rho)^{1/2}/t$) for various axial wave numbers ($\lambda=m\pi R/L$) in terms of ***t/R***'s variations (***n***=1).....228

Figure 3.21 Frequency distribution (Ω/Ω_o, $\Omega_o=\pi(G/\rho)^{1/2}/t$) for various axial wave

numbers (λ=mπR/L) in terms of ***t/R***'s variations (***n***=2).....229

Figure 3.22 Frequency distribution (Ω/Ω_o, $\Omega_o=\pi\,(G/\rho)^{1/2}/t$) for various axial wave numbers (λ=mπR/L) in terms of ***t/R***'s variations (***n***=3).....230

Figure 3.23 Frequency distribution (Ω/Ω_o, $\Omega_o=\pi\,(G/\rho)^{1/2}/t$) for various axial wave numbers (λ=mπR/L) in terms of ***t/R***'s variations (***n***=4).....231

Figure 3.24 Variation of non-dimensional natural frequency ($\Omega=\omega_o R^2(\rho/E_2)^{1/2}/t$)of a symmetric cross-ply open cylindrical shell for various ratios of ***L/R*** and ***m***.....232

Figure 3.25 Frequency distribution ($\Omega=\omega_o R(\rho(1-\upsilon^2)/E)^{1/2}$) of an isotrope, open cylindrical shell in conjunction with ***L/R*** and ***m*** variations.....233

Figure 4.1 (a) Circular cylindrical shell geometry

(b)Positive directions of integrated stress quantities

(c) Flowing fluid open cylindrical shell.....287

Figure 4.2 (a) Finite element discretization

(b) Nodal displacement at node ***i*** for the ***m***'th element

(c) Definition of variables.....288

Figure 4.3 Frequency distribution (Ω) of a fluid-filled closed cylindrical shell as a function of ***R/t*** and ***L/R*** variations.....289

Figure 4.4 Variation of non-dimensional natural frequencies(Ω) in conjunction with

variation of ***R/t*** and ***L/R***.....290

Figure 4.5 Natural frequencies (Ω) of a fluid-filled cylindrical shell in terms of the ***m*** and ***L/R*** variations.....291

Figure 4.6 The effect of axial mode number (***m***) on the frequency parameter(Ω) of a fluid- filled shell.....292

Figure 4.7 Variation of non-dimensional natural frequencies (Ω) as a function of ***R/t***, **L/R** and (***n***) variations.....293

Figure 4.8 Natural frequency parameter(Ω) of a fluid-filled shell as variation of circumferential mode number (***n***).....294

Figure 4.9 Natural frequency parameter (Ω) of a cross-ply fluid-filled shell in terms of circumferential wave number (**n**) variations.....295

Figure 4.10 Frequency distribution (Ω) of a cross-ply fluid-filled shell for various axial mode numbers (**m**).....296

Figure 4.11 Variation of frequency parameter (Ω) of a fluid -filled shell in conjunction with ***L/R*** and ***m*** variations.....297

Figure 4.12 Frequency distribution(Ω) of a cross-ply fluid-filled cylindrical shells with respect to the liquid depth ratio.....298

Figure 4.13 Variation of fundamental frequency parameter (Ω) of a fluid-filled angle-ply open cylindrical shell in terms of ***L/R***, ***m*** variations and the liquid depth ratio.....299

Figure 4.14 Frequency parameter (Ω) variation of clamped-clamped fluid-filled open cylindrical shell with respect to variation of ***L/R*** and the liquid depth ratio.....300

Figure 4.15 Frequency distribution (Ω) of fluid-filled cross-ply cylindrical shell for various numbers of (***m***, ***n***) and depth ratio (***b/d***).....301

Figure 4.16 Variation of non-dimensional frequency (Ω)of a fluid-filled cylindrical shell as variation of ***b/d*** and (**n**).....302

Figure 4.17 Frequency variation (Ω)of empty, fluid-filled and immersed in fluid shell with respect to (**n**) variations.....303

Figure 4.18 Stability of a cross-ply cylindrical shell containing a flowing fluid as a function of flow velocity.....304

Figure 4.19 Stability of a simply-supported cylindrical shell as a function of flow velocity (internal flow).....305

Figure 4.20 Stability of a cylindrical shell with respect to velocity of fluid for (**n** =4,5).....306

Figure 4.21 Stability of a cylindrical shell as a function of flow velocity.....307

Figure 4.22 Lowest natural frequency parameter (Ω) of a fluid-filled cylindrical shell in conjunction with ***t/R*** variation.....308

Figure 4.23 Variation of non-dimensional frequency parameter (Ω) with liquid depth ratio, ***L/R*** and (**m**,**n**).....309

INTRODUCTION

GÉNÉRALITÉS

Les éléments structuraux, comme les coques et les plaques, fabriqués en matériaux composites sont considérablement utilisés dans diverses industries, par exemple dans l'industrie nucléaire, l'industrie aérospatiale et aéronautique, l'industrie navale et le domaine pétrolier. Leur application industrielle s'est rapidement développée à cause de leurs propriétés mécaniques. C'est pourquoi il est si impératif de bien connaître les caractéristiques statiques et dynamiques de ces structures afin d'éviter tout effet destructif durant leur utilisation industrielle.

Beaucoup de travaux ont étudié les coques en considérant différents facteurs tels que les grands déplacements, la variation de l'épaisseur, les contraintes résiduelles, l'inertie de rotation, l'anisotropie, la courbure initiale, l'imperfection géométrique et l'effet du milieu environnant, etc. La plupart de ces études ont été faites dans les domaines linéaire et non-linéaire, avec ou sans l'interaction entre ces structures et le milieu fluide environnant, selon les premières approximations de la théorie de Love-Kirchhoff (la normale à la surface moyenne reste droite et normale après déformation) qui donnent dans certains cas des résultats incomplets en prédisant les déformations, les charges de flambement et les

fréquences naturelles pour des plaques et des coques ayant une épaisseur modérément grande.

Les erreurs sont encore plus importantes dans le cas des plaques et des coques fabriquées de matériaux composites comme le graphite-epoxy ou le boron-epoy, puisque le rapport *E/G* est très grand (de l'ordre 25 à 40 au lieu d'environ 2,5 pour des matériaux isotropes). On peut donc dire que les déformations de cisaillement jouent un rôle plus important dans la résolution de la rigidité effective de flexion des plaques et des coques laminées. Une étude bibliographique exhaustive sur le sujet est présentée dans le premier chapitre de cette thèse.

On étudie dans ce travail une classe générale de problèmes qui incluent le comportement élastique et linéaire des plaques et des coques anisotropes et l'effet de déformation de cisaillement transversal, l'inertie de rotation ainsi que l'interaction avec un fluide incompressible et non-visqueux.

Dans cette étude nous allons d'abord développer les équations générales (par exemple, les équations d'équilibre et les relations constituantes et cinématiques) pour l'analyse linéaire des coques anisotropes laminées et multicouches de forme générale. Ces équations sont basées sur une nouvelle théorie où sont pris en considération les effets des déformations de cisaillement et de l'inertie de rotation aussi bien que ceux de la courbure initiale.

Par la suite, nous appliquerons ces équations à différentes géométries de coques et de plaques, et nous développerons un modèle numérique pour l'analyse dynamique et statique des coques cylindriques ouvertes ou fermées, anisotropes multicouches et remplies (partiellement ou complètement) d'un liquide ou soumises à un fluide en écoulement. On peut classer le milieu fluide environnant selon les caractéristiques suivantes : la viscosité, la compressibilité, le type d'écoulement (stationnaire ou turbulent), le mouvement de la surface libre, etc.

Nos études numériques sur des coques cylindriques anisotropes englobent les points suivants :

a) considération du comportement élastique des matériaux laminés;

b) considération de l'effet des déformations de cisaillement, de l'inertie de rotation et de la courbure initiale;

c) emploi d'une méthode hybride d'élément finis;

d) étude de l'interaction structure-fluide.

Cette étude entre dans le cadre d'un projet de recherche dont le but est de développer un modèle numérique d'une coque quelconque soumise à un écoulement interne et/ou externe. Les résultats de ces travaux seront utiles pour tout développement de réservoirs sous

pression, d'échangeur de chaleur, etc.

BUT DE LA RECHERCHE

Comme le montre notre l'étude bibliographique, les coques ont fait l'objet de plusieurs travaux dans les domaines de la statique et de la dynamique avec ou sans fluide en écoulement. Parmi les nombreuses théories établies, peu de travaux ont été faits pour l'analyse des coques ouvertes et anisotropes laminées en considérant les effets des déformations de cisaillement et de l'inertie de rotation, notamment pour des coques soumises à un liquide en écoulement. La plupart des méthodes utilisées sont inaptes à déterminer les hautes fréquences du système coque-fluide avec autant de précision que pour les basses fréquences.

Les objectifs principaux de notre programme de recherche sont:

a) de développer analytiquement les équations d'équilibre, les relations constituantes et les relations cinématiques qui décrivent le comportement des coques de forme générale, fabriquées avec des matériaux anisotropes, laminées multicouches en considérant les effets des déformations de cisaillement, ceux de l'inertie de rotation ainsi que de la courbure initiale.

b) d'appliquer ces équations aux différentes géométries de coque comme les coques de révolution, cylindriques, sphériques et coniques, aussi bien qu'aux plaques rectangulaires

et circulaires.

c) d'analyser statiquement et dynamiquement le comportement des coques cylindriques minces, élastiques et anisotropes laminées multicouches, ouvertes ou fermées dans le cas vide.

d) d'étudier les vibrations libres des coques cylindriques remplies (partiellement ou complètement) d'un liquide ou soumises à un écoulement d'un fluide non-visqueux et incompressible interne ou externe.

Une partie importante du projet consiste donc à développer des méthodes numériques et des logiciels qui permettent de résoudre numériquement les équations du mouvement d'une coque cylindrique et d'obtenir les fréquences naturelles. La méthode développée est une combinaison de la méthode des éléments finis hybrides, de la théorie des déformations de cisaillement des coques et de celle des fluides. Les coques cylindriques ouvertes ont des conditions frontières arbitraires sur les rives droites et elles sont simplement supportées selon leur rives courbes.

L'équation du mouvement du système coque-fluide peut s'écrire de la façon suivantes:

$$\left[[M_s]-[M_f]\right]\{\ddot{\delta}\}-\left[C_f\right]\{\dot{\delta}\}+\left[[K_s]-[K_f\}\right]\{\delta\}=\{0\} \qquad (1)$$

où: $\{\delta\}$est le vecteur déplacement; $[M_s]$ et $[K_s]$ sont les matrices de masse et de rigidité linéaire de la coque vide; $[M_f]$, $[C_f]$ et $[K_f]$ sont respectivement les matrices associées aux forces d'inertie, de Coriolis et centrifuge dues au fluide en écoulement.

Dans la partie numérique de cette thèse, notre objectif est donc de trouver ces matrices. Nous résoudrons l'équation du mouvement du système coque-fluide (1) afin de déterminer les fréquences naturelles d'une coque cylindrique ouverte ou fermée, élastique, mince, anisotrope remplie de liquide ou soumise aux écoulements du fluide.

Cette étude entre dans le cadre d'un large projet de recherche dirigé par le professeur A.A. Lakis et ayant pour but d'analyser dynamiquement une coque quelconque avec ou sans fluide en écoulement.

ORGANISATION DE LA THÈSE

Cette thèse a été élaborée sous forme d'articles qui constituent le corps principal du travail. Elle est divisée en quatre principaux chapitres.

Le premier chapitre présente une revue de la bibliographie consacrée à l'analyse des plaques et des coques basée sur différentes théories existantes, de différents points de vue tels que : *i*) l'importance des applications des matériaux anisotropes dans l'industrie, *ii*) les théories des coques basées sur les hypothèses de Love-Kirchhoff, *iii*) les théories des coques considérant les déformations de cisaillement, *iv*) l'étude des interactions structures-fluide,

v) la méthode de solution.

Au deuxième chapitre, nous étudions d'abord le comportement des matériaux composites, au niveau macroscopique. Nous développons donc un programme qui peut calculer la matrice d'élasticité pour un cas général (matériaux anisotropes ayant ***n*** couches orthogonales ou croisées avec propriétés mécaniques et orientation des fibres différentes d'une couche à l'autre) qui relie le vecteur des contraintes à celui des déformations (loi de Hooke).

Nous appliquons par après le principe du travail virtuel avec les déplacements et les rotations comme variables indépendantes pour trouver les équations de mouvement. Cette théorie conduit à cinq équations différentielles couplées et linéaires. Enfin, nous appliquons ces équations aux différentes géométries de coque comme les coques de révolution, cylindriques, sphériques et coniques aussi bien qu'aux plaques rectangulaires et circulaires.

Le travail qui constitue le deuxième chapitre est présenté dans l'article intitulé "**General Equations of Anisotropic Plates and Shells Including Transverse Shear Deformations, Rotatory Inertia and Initial Curvature Effects**".Cet article a été soumis à l'International Journal of Engineering Science.

Le troisième chapitre présente l'application numérique de cette théorie au cas d'une coque cylindrique ouverte ou fermée, anisotrope et vide. Les résultats obtenus sont comparés

avec d'autres résultats disponibles dans la littérature. L'analyse est présentée sous la forme d'un article intitulé "**Transverse Shear Deformation in Free Vibration Analysis of Anisotropic Open Circular Cylindrical Shells**" Cet article a été soumis à l'International Journal of Computers and Structures.

Dans le quatrième chapitre, nous étudions les vibrations libres des coques cylindriques minces, ouvertes ou fermées, anisotropes laminées, partiellement ou complètement remplies de fluide ou submergées dans un fluide, ou bien soumises à un écoulement d'un fluide non-visqueux et incompressible. Ce travail est présenté dans l'article intitulé "**Shear Deformation in Dynamic Analysis of Anisotropic Laminated Open Cylindrical Shells Filled With or Subjected to a Flowing Fluid**". L'article a été soumis au Journal of Computer Methods in Applied Mechanics and Engineering.

Finalement, nous présenterons les principales conclusions tirées de cette thèse et énumérerons les perspectives des travaux futurs à la suite de cette recherche.

CHAPITRE I

REVUE BIBLIOGRAPHIQUE

Nous divisons ce chapitre en cinq parties :

1) **Matériaux anisotropes.**

2) **Les théories classiques des coques.**

3) **Les effets des déformations de cisaillement dans l'analyse des plaques et des coques.**

4) **Étude de l'interaction dans un système couplé structure-fluide.**

5) **Les méthodes de solution**

1.1 Matériaux anisotropes

Les éléments structuraux fabriqués en matériaux composites renforcés ont été considérablement utilisés dans diverses industries au cours des dernières années. Leur application industrielle s'est rapidement développée à cause de leurs propriétés mécaniques. En général, ces matériaux sont des laminés de fibres renforcées qui sont disposées en

nombreuses couches avec diverses orientations des fibres(Figures 1.1 et 1.2). L'une des applications caractéristiques est l'industrie aérospatiale.

En optimisant les propriétés, nous pouvons réduire le poids global d'une structure, puisque sa rigidité est optimisée aux endroits où elle est requise. Mais il faut aussi mentionner que les systèmes structuraux optimisés sont souvent plus sensibles aux instabilités. C'est pourquoi une modélisation exacte du comportement de la charge-déplacement ou de l'équilibre peut nous aider à prédire la charge limite qui pourra être portée par la structure afin d'éviter l'instabilité.

Hilderbrand et ses collègues (1949) ont été les premiers à travailler sur les coques orthotropes. Ambartsumyan (1964) a consacré un texte entier aux matériaux anisotropes, basé sur la théorie de Love, avec une certaine discussion des contraintes transversales. Le texte de Reddy (1984) et celui de Vinson et Sierakowski (1986) discutent des structures anisotropes laminées incluant divers traitements des déformations de cisaillement.

Par ailleurs, l'anisotropie du laminé suppose un liant parfait entre les couches, l'adhésif ayant une épaisseur infinitésimale mais de rigidité infinie. Cette façon de faire conduit à la théorie des plaques laminées (CLPT: Classical Laminated Plate Theory). Jones (1975) présente cette théorie (CLPT) qui est reliée aux hypothèses de Love-Kirchhoff. Jones a signalé dans son travail que l'effet de la déformation de cisaillement pour les matériaux anisotropes est plus significatif que dans le cas des mêmes constructions isotropes.

L'étude des matériaux composites nécessite l'examen de leurs comportements au niveau macroscopique pour analyser les réponses linéaires et non linéaires, les fréquences naturelles, les charges de flambement ; il faut aussi examiner leurs comportements au niveau de la micro-mécanique pour étudier d'autres effets comme la fissuration, le délaminage et la perte de liaison entre les matrices et les fibres. L'effet des déformations de cisaillement pour des matériaux anisotropes est plus important parce que le module de cisaillement est plus grand que le module d'élasticité.

La première analyse qui incorporait le couplage flexion-extension dû à la non-symétrie des laminés a été faite par Ambartsumyan (1964). Dans son analyse, il a supposé que chaque couche est orientée de sorte que les axes principaux du matériau coïncident avec les coordonnées principales de la surface moyenne. Donc son travail traite de ce qui est maintenant connu comme les coques orthotropes laminées plutôt que les coques anisotropes.

Il existe dans la littérature un certain nombre de théories pour analyser les coques anisotropes. La plupart de ces théories ont été développées pour des coques minces basées sur les hypothèses de Kirchhoff-Love (la normale à la surface moyenne reste droite et normale après déformation). Cependant, l'application de telles théories aux coques anisotropes laminées pourrait conduire à des grandes erreurs dans l'appréciation des déformations, des contraintes ainsi que des fréquences.

1.2 Les théories classiques des coques

Les coques minces ont fait l'objet de plusieurs travaux de recherche allant de la statique à la dynamique. La première tentative pour élaborer une théorie des coques a été faite par Aron en 1874, en utilisant les équations générales d'élasticité, et a été suivie en 1888 par Love, qui a prouvé une théorie approximative décrivant le comportement des coques minces et élastiques, et appelée "Love's first approximation". Depuis 1888 jusqu'à nos jours, la théorie élastique des coques a été réexaminée périodiquement dans la littérature.

Beaucoup de méthodes ont déjà été utilisées pour dériver les équations des coques via les relations d'élasticité. Dans la réalité, le comportement des coques sous charge peut être très différent pour d'une surface à l'autre.

En dérivant les équations d'équilibre, les forces et les déplacements qui agissent à la surface sont définis en intégrant les contraintes à travers l'épaisseur. Cependant, les contraintes dans le plan deviennent dominantes, puisque la coque est supposée mince. On peut donc décrire d'une façon approximative le comportement de la coque en se basant uniquement sur le comportement d'une surface 2-D [Saada (1993) ; Mollman (1981) ; Kraus (1967), Novozhilov (1959) et Niordson (1980)]. Dans les coques minces, les contraintes planes ont tendance à dominer la réponse de la coque sous le chargement, donc les

contraintes transversales (normales) sont d'importance moindre. Dans ce cas, la contrainte normale peut être négligée.

Beaucoup de théories classiques ont été originalement développées pour des coques minces et élastiques basées sur les hypothèses de Love -Kirchhoff (Saada (1993)) telles qu'utilisées dans les travaux de Naghdi (1956), puis de Bert et Francis (1974). Une étude détaillée des coques minces linéaires et non linéaires peut être trouvée dans les monographies de Kraus (1967) et d'Ambartsumyan (1964). Leissa (1973) a produit une bonne synthèse de plusieurs recherches dans une excellente bibliographie vieille de 25 ans.

Les hypothèses de Love sont définies comme suit :

a) Les lignes droites et normales à la surface moyenne restent droites et normales suite à la déformation.

b) Les contraintes normales perpendiculaires à la surface moyenne peuvent être négligées dans les relations constitutives.

c) Les déplacements transversaux sont indépendants du paramètre d'épaisseur.

d) La coque est mince.

Ces hypothèses conduisent à une théorie des coques minces qui peut être vue comme une extension de la théorie des plaques, souvent appelée la théorie des coques de

Kirchhoff-Love. La première hypothèse mène à négliger les déformations de cisaillement bien que la contrainte de cisaillement transversal doive être incluse dans les équations d'équilibre. Mais, à mesure que la coque devient épaisse, les effets transversaux deviennent plus importants, notamment celui de la déformation de cisaillement.

Tous les travaux basés sur les hypothèses de la théorie de Love-Kirchhoff, dans lesquelles la déformation de cisaillement est négligeable, sont connus comme des approximations du premier ordre de Love donnant des résultats suffisamment exacts quand:

i) Le rapport de rayon-épaisseur est grand.

ii) Les excitations dynamiques sont la plage des basses fréquences.

iii) L'anisotropie des matériaux n'est pas trop forte.

D'autre part, l'effet de la courbure initiale ne doit pas être négligé dans les relations constitutives et dans le champ des contraintes, comme l'indiquent Voyiadjis et Shi (1991). Pour considérer ces effets, le terme $1+Z/R$ doit être inclus dans l'analyse.

Les élégantes représentations de la théorie de Love peuvent être strictement dérivées via la définition de la théorie de surface sans référer aux relations 3-D [Kraus (1967), Mollman(1981) et Niordson (1980)]. Une inconsistance existe dans la théorie de Love puisqu'il en résulte des déformations non nulles dans le mouvement de corps rigide. Cette

inconsistance a vrai semblablement incité beaucoup de chercheurs à développer des théories de coque légèrement différentes.

Sanders (1959) a redéfini les forces et les moments de telle façon que les déformations de mouvements rigides disparaissent. Les approximations successives ont été faites dans les relations constitutives exactes par Sanders(1959) pour analyser des coques isotropiques et par Liberscu (1987) pour des coques anisotropes.

Les contraintes normales sont en général d'ordre t/R (le rapport épaisseur-rayon) fois les contraintes de flexion tandis que celles de cisaillement sont d'ordre t/L (le rapport épaisseur-longueur) fois les contraintes de flexion. Donc, pour L/R inférieur à 10, les contraintes normales sont négligeables en comparaison des contraintes de cisaillement.

Pour quelques cas, les éléments qui forment le système éprouvent seulement de petites déformations sous la charge mais peuvent échouer de façon catastrophique à cause de leur configuration géométrique. Donc toute une classe de systèmes structuraux peut être représentée exactement sur la base de la non- linéarité géométrique, des petites déformations et du comportement linéaire des matériaux élastiques.

Il est bien connu que le comportement non-linéaire des coques cylindriques composites joue un rôle important dans la stabilité et la réponse dynamique des coques. Reissner (1955) est considéré comme un pionnier dans l'analyse des effets de la non-linéarité

géométrique sur la dynamique des coques cylindriques.

Une nouvelle série de relations constitutives non linéaires pour des coques axisymétriques à grands déplacements (en retenant plus de termes) a été présentée par Rotter et Jumikis (1988). Leur travail est basé sur les hypothèses de Kirchhoff. Ils ont retenu quelques termes des produits des différentiations des déplacements, qui ont été omis dans les théories précédentes et qui peuvent être importants dans certains problèmes de flambement.

La théorie non linéaire présentée par Sanders (1962) est restreinte aux hypothèses de Kirchhoff. Les déformations de la surface moyenne sont supposées petites et les rotations modérément petites. Pour les cas non linéaires, les relations de Sanders(1962), qui sont beaucoup utilisées, conduisent à des solutions fausses pour les problèmes pratiques, du fait que certains termes des produits de différentiation des déplacements sont négligés dans les relations constitutives non linéaires (Rotter et Jumikis (1988)). Malgré tout, les théories non linéaires de Sanders (1962) et de Novozhilov (1953) sont plus exactes que celle de Donnell (1933) parce que ces deux premiers auteurs ont retenu plus de termes dans leurs relations constitutives.

Naghdi (1957) a employé le principe variationnel mixte de Reissner (1950) pour développer une formulation complète des coques élastiques et isotropes (en appliquant la même série tronquée qu'Hilderbrand) en retenant respectivement deux et trois termes dans

la série de Taylor pour les déplacements tangentiels et transversaux. Inclure le troisième terme dans les déplacements tangentiels n 'a aucune signification pratique pour des coques suffisamment minces. C'est la raison qui a incité Naghdi (1957) à tronquer l'expansion en série de Taylor après les termes linéaires dans la coordonnée d'épaisseur pour les déplacements tangentiels. Beaucoup d'auteurs ont suivi cette approche ultérieurement.

Martin et Drew (1971) ont résolu les équations qui décrivent le comportement d'une coque de révolution et anisotrope. Leur analyse est basée sur la théorie de Sanders (1959) mais sans considérer les effets des déformations de cisaillement. La méthode de solution suit la procédure employée par Budianski et Radkowski (1963). Les équations sont découplées en traitant les termes non linéaires comme des quantités connues (pseudo-charges) et la procédure d'élimination de Gauss est utilisée pour obtenir la solution. Cette solution est utilisée pour calculer les termes non linéaires et est par la suite réintroduite dans le système comme une estimation révisée des pseudos-charges. Cette procédure itérative continue jusqu'à ce que la solution converge.

Cheng (1973, 1984) a développé une théorie linéaire exacte pour la coque cylindrique et circulaire basée sur des hypothèses de Love. Dong, Pister et Taylor (1962) ont développé la théorie de Love (petits déplacements, similaires à ceux d'Ambartsumyan) pour l'analyse de la flexion des plaques et coques minces, théorie qui se veut une extension de la théorie développée par Reissner et Stavsky (1961) (plaques anisotropiques selon de la théorie des

coques incomplète de Donnell (1933)).

L'analyse non-linéaire des coques minces basée sur les hypothèses de Love-Kirchhoff a été faite par Basar et Ding(1990). Pagano (1970, 1971) et Srinivas et Rao (1970) ont développé certaines solutions exactes des équations d'élasticité en 3-D pour des plaques composites. Ils ont conclu que CLPT donne de bonnes approximations pour les déplacements et les contraintes si la plaque est mince.

Padovan et Lestinigi (1973, 1974) ont employé une procédure d'intégration numérique à segments multiples complexes pour analyser statiquement des coques de révolution laminées sous charges mécaniques et thermiques. Les équations du mouvement sont basées sur la théorie de Love-Reissner. C'est donc dire que l'effet de déformation de cisaillement a été négligé. Pour des problèmes statiques, Flügge et Kelkar (1968) ont obtenu une solution exacte pour des cylindres fermés, longs et isotropes sous des forces de surface en deux dimensions.

Dowell et Venters (1968) ont présenté une approximation modale afin de dériver les équations de mouvement pour les vibrations non linéaires d'une coque cylindrique en utilisant la théorie des coques incomplète de Donnell (1933). Cheng et Ho (1963) ont présenté une analyse les coques cylindriques et anisotropes en utilisant la théorie de Flügge (1960).

On trouve dans la littérature quelques travaux sur les coques cylindriques (isotropes ou orthotropes) basés sur les équations de Flügge et de Donnell [Saada (1993), Kraus (1967) et Reddy (1984)]. Les équations gouvernantes des coques cylindriques orthotropes ont été résolues via une paire d'équations complexes conjuguées de quatrième ordre par Cheng et He(1984). Leur travail est basé sur les hypothèses de Kirchhoff.

Dong (1968) a étudié les vibrations libres des coques cylindriques et orthotropes laminées avec des conditions frontières homogènes. La réponse statique d'un problème axisymétrique des coques cylindriques et orthotropes avec une longueur finie, en utilisant les équations d'élasticité en 3-D, a été établie par Jing et Zeng(1993). Les équations différentielles couplées d'ordre supérieur sont réduites à des équations ordinaires à coefficients variables en choisissant une solution composée de fonctions trigonométriques le long de la direction axiale.

Bogner et ses collègues (1967) ont développé une méthode d'éléments finis pour une coque cylindrique et isotrope basée sur la théorie classique. Pagano(1972) a obtenu le champ des contraintes pour un cylindre fermé, anisotrope et homogène sous des charges surfaciques en 2-D pour lequel le problème est indépendant de la coordonnée axiale. Les vibrations libres des coques cylindriques laminées avec des couches orthogonales ont été étudiées par Timarci et Soldatos (1995).

Une théorie statique et non linéaire géométrique incluant de grands déplacements et

de grandes rotations a été développée par Dennis et Palazotto (1990) en utilisant la méthode des éléments finis et une description Lagrangienne totale pour la solution approximative. Ils ont employé cette méthode pour analyser un panneau cylindrique et isotrope. La solution des équations non linéaires a été faite en utilisant la méthode de Newton-Raphson. Ces équations ont été linéarisées à l'aide d'une série tronquée de Taylor.

Une étude plus rigoureuse des vibrations libres et non linéaires des coques cylindriques a été faite par Atluri (1972) qui a comparé ses résultats avec les données expérimentales accessibles et qui a aussi conclu sur la possibilité de non-linéarité de type assouplissement. En adoptant la technique de perturbation, Chen et Babcork (1975) ont aussi considéré la vibration à grande amplitude des coques cylindriques et minces. Ramachandran (1979) a étudié la vibration non linéaire des coques cylindriques à épaisseur variable.

Se basant sur les équations de Von Karman-Donnell, Khot (1970) a étudié le comportement post-flambement des coques cylindriques sous charge axiale ainsi que la rotation. Les résultats obtenus montrent qu'en général, les coques composites sont moins sensibles aux imperfections que celles qui sont isotropes.

Iu et Chia (1988) ont discuté des vibrations non linéaires et post-flambement des coques cylindriques ayant des couches orthogonales et anti-symétriques selon des suppositions de Von Karman-Donnell. Ils ont négligé certains termes (comme les produits croisés de différenciation des déplacements) dans les relations constitutives non linéaires.

Les réponses dynamiques des coques cylindriques incluant les effets des non-linéarités géométriques et des matériaux sous charges transitoires ont été présentées par Wu et Witmer (1974). Les formulations sont basées sur le principe du travail virtuel et sur celui de D'Alambert ainsi que sur les hypothèses de Love.

1.3 Les effets des déformations de cisaillement dans l'analyse des plaques et des coques.

Négliger les déformations de cisaillement dans les composites laminés peut conduire à sous-estimation les déformations et les contraintes ainsi qu'à surestimation les fréquences naturelles et les charges critiques de flambement à cause du bas module de rigidité. Comme Koiter (1960) l'a indiqué, l'amélioration de la théorie approximative de Love pour des coques minces et élastiques n'a pas de sens à moins que les effets des déformations transversales et des contraintes normales soient pris en compte dans la théorie améliorée. Les théories classiques donnent des résultats fortement erronés lorsqu'elles sont utilisées pour prédire les déplacements, les charges de flambement ou les fréquences naturelles quand les coques ou les plaques deviennent épaisses.

Les erreurs relatives aux déplacements, aux contraintes, aux fréquences naturelles et aux charges de flambement sont encore plus grandes pour des plaques et des coques fabriquées en composite comme le graphite-epoxy et le boron-epoxy dont le rapport de

module d'élasticité /module de rigidité (E/G) est très grand (de l'ordre de 25 à 40 au lieu d'environ 2,5 pour des matériaux isotropes). On peut donc dire que les déformations de cisaillement jouent un rôle beaucoup plus important dans la résolution de la rigidité effective de flexion des plaques et des coques laminées.

Les effets des déformations de cisaillement sur la vibration non linéaire et le comportement post-flambement sont significatifs, notamment pour les coques laminées ayant une épaisseur modérément grande, une rigidité élevée et un grand nombre de couches.

Les effets des déformations de cisaillement, des contraintes normales ainsi que des déformations normales transversales sur le comportement des coques laminées peuvent être incorporées dans le modèle mathématique via l'inclusion de termes d'ordre supérieur dans la série de puissance du champ des déplacements supposés. Les effets de la déformation transversale peuvent généralement être inclus dans l'analyse via les relations constitutives.

L'étude des effets de cisaillement nous montre que ces effets peuvent devenir assez significatifs pour de petits rapports R/t (rayon-épaisseur) ou L/t (longueur-épaisseur) ainsi que pour des longueurs d'onde plus courtes. La sévérité des effets des déformations de cisaillement dépend aussi de l'anisotropie des couches.

Dans la théorie qui présente les déformations de cisaillement, les normaux à la surface peuvent tourner de sorte que les sections, qui sont originalement perpendiculaires,

restent planes mais seulement si elles ne sont plus perpendiculaires par suite de la déformation. L'effet de la déformation de cisaillement est représenté en incluant le degré de liberté indépendant dans les relations cinématiques. Ici encore, la coque est décrite par le comportement de la surface moyenne ; ces approches représentent donc des théories en 2-D (Reddy (1984)).

Les théories de cisaillement du premier ordre s'appellent théories de Reissner-Mindlin (RM), mais celles-ci ne satisfont pas les conditions aux limites de cisaillement transversal sur les surfaces extérieures des coques ou des plaques. Donc, les théories basées sur celles de *RM* requièrent habituellement des facteurs de correction pour des considérations d'équilibre. Les facteurs de correction ne sont fonction que des paramètres de laminage (nombre de couches, séquence de couchage, degré d'orthotropie et orientation des fibres dans chaque couche individuelle).

Stein (1986) a utilisé l'expansion en séries tronquées pour les déformations non linéaires exactes en considérant l'effet des déformations de cisaillement pour des plaques et coques isotropes. L'analyse non linéaire géométrique quasi-3D a été faite par Palazotto et ses collègues (1985, 1986) pour des plaques et des coques composites. Grigolyuk et Kulikov (1988) ont passé en revue l'analyse des coques composites multicouches dans lesquelles le principe variationnel mixte de Reissner avait été utilisé.

Widera et Logan (1970) ont utilisé une expansion en série paramétrique ainsi que le

principe variationnel de Reissner (1950) pour développer une théorie qui décrit le comportement d'une coque cylindrique circulaire, élastique anisotrope et non-homogène de premier ordre pour des coques minces et d'ordre supérieur pour les coques épaisses. Ils ont employé le même modèle de déplacement que celui de Naghdi (1956). Reddy (1984) a développé des théories qui satisfont les conditions de contraintes nulles sur les surfaces extérieures.

Les effets des déformations de cisaillement et des contraintes normales ont été considérés par Hilderbrand, Reissner et Thomas (1949) et Reissner(1952). Hilderbrand et ses collègues(1949) ont trouvé que l'effet des termes de déplacement de deuxième ordre et des termes dans le déplacement transversal donnant les déformations normales non nulles, est négligeable. Dans le domaine des coques orthotropes et homogènes, Hilderbrand et al. (1949) étaient les premiers à ne pas utiliser les hypothèses de Love en supposant une série étendue de Taylor ayant les trois termes pour le vecteur des déplacements.

Les théories de coque et de plaque présentées dans le travail de Whitney et Sun (1973) sont basées sur un champ de déplacement dans lequel les déplacements de la surface sont des expansions linéaires du paramètre d'épaisseur et les déplacements transversaux sont des expansions quadratiques de la coordonnée d'épaisseur. Les déplacements ont été développés d'une façon similaire à ce que Mindlin et Medick (1959) avaient fait pour des plaques isotropes et homogènes.

Ces théories sont encombrantes et exigent plus de calcul que les autres parce qu'une inconnue dépendante est introduite dans la théorie avec chaque puissance supplémentaire de la coordonnée. Quand même, les théories de cisaillement de plus hauts ordres ne donnent pas des contraintes transversales qui soient significativement meilleures, mais les déplacements nous montrent une amélioration considérable pour des plaques épaisses par rapport à la théorie du CLPT.

Jing et Liao (1989) ont proposé une fonctionnelle mixte avec des déplacements et des contraintes de cisaillement comme variables indépendantes et ont donc établi un élément hybride pour analyser des plaques laminées et épaisses.

Phan et Reddy (1985) ont présenté une théorie de déformation de cisaillement d'ordre supérieur afin de déterminer les fréquences naturelles et les charges de flambement des plaques élastiques. Ils ont aussi établi une solution exacte pour analyser les vibrations libres et le flambement des plaques rectangulaires et orthotropes.

La théorie développée par Reddy(1984) incluant l'effet de cisaillement pour des plaques composites contient les mêmes inconnues dépendantes que celle de Whitney et Pagano (1970) tandis que le champ de déplacement utilisé est celui de Levinson (1980). Reddy a développé des théories de plaque qui incluent des termes cubiques en définissant des déplacements plans (sur la surface).

Une théorie simple pour l'analyse de flexion non linéaire des plaques rectangulaires et laminées, qui tient compte des déformations de cisaillement, a été formulée par Ren (1991) et Ling en utilisant le principe des déplacements virtuels.

L'étude des plaques laminées nous montre que le champ des déplacements suggéré par Murakami (1986) peut améliorer les réponses dynamiques dans le plan (qui sont même meilleures qu'avec les théories d'ordres élevés). Le champ des déplacements suggéré par Murakami(1986), ayant des composantes de déplacement linéaires et de déplacement transversal constant à travers d'épaisseur, est employé pour formuler une théorie mixte.

Reddy (1984) a présenté une théorie à ordre supérieur des déformations de cisaillement pour des plaques en tenant compte des déformations de Von-Karman. Cette théorie contient les mêmes inconnues dépendantes que celles de Hencky-Mindlin (1951). Les solutions exactes de plusieurs plaques simplement supportées ont été obtenues en utilisant une théorie linéaire et les résultats ont été comparés avec ceux provenant de solutions exactes (théorie de l'élasticité 3-D). Reddy a utilisé le principe de Hamilton pour dériver les équations du mouvement et il a employé la procédure de Navier pour résoudre le problème.

Rothert et Di (1994) ont présenté de leurs coté les formulations et la procédure de calcul pour l'analyse non linéaire géométrique des coques orthotropes laminées, en se basant sur une méthode modifiée du principe Hellinger-Reissner (référence de Di et Cheung (1991))

et en utilisant la description Lagrangienne totale.

L'analyse des vibrations des coques de révolution anisotropes laminées ainsi que la sensibilité de leur réponse aux coefficients des matériaux anisotropes ont été présentées par Noor et Peters (1987). Les formulations analytiques sont basées sur la théorie de Sandres-Budiansky (1963,1968) incluant les effets des déformations de cisaillement. Chaque variable de coque est exprimée en fonction trigonométrique dans la direction circonférentielle et un modèle mixte d'éléments finis est employé dans la direction méridionale. Noor et Peters ont utilisé une méthode de réduction sur l'espace par l'emploi successif de la méthode des éléments finis et la technique classique de Bubnov-Galerkin pour réduire les dimensions du problème aux valeurs propres.

Touratier (1992) a présenté une théorie linéaire incluant la déformation de cisaillement pour des coques axisymétriques et multicouches. Il a proposé une théorie des déformations de cisaillement pour des coques axisymétriques, modérément épaisses et multicouches. Cette théorie est restreinte à une coque axisymétrique sous chargement axisymétrique et avec conditions aux rives classiques.

Ji-Fan He (1995) a analysé des coques laminées pour le cas statique en utilisant la théorie de déformation de cisaillement. Dans cette théorie, l'épaisseur de la coque doit être petite en comparaison avec le rayon de courbure principal.

Une théorie de déformation de cisaillement pour des coques laminées a aussi été proposée par Dong et Tso(1972), et par Reddy(1984). Ces théories violent en général la condition de la continuité de traction aux interfaces des couches. Quelques théories ont été proposées pour surmonter ces inconvénients par Hsu et Wang (1970) et Di Sciuva (1987). Le travail de Librescu et Schmidt (1988) présente une analyse des coques anisotropes en considérant les petites rotations.

Une analyse non linéaire géométrique et transitoire des coques composites laminées (isotropes transversales) basée sur la théorie de Von-Karman a été présentée par Kant et Kommineni (1994). Ceux-ci n'ont pas considéré certains produits de différentiation du premier ordre des composantes des déplacements tangentiels (relativement aux directions x, y et z) dans les relations constitutives. Ces relations sont basées sur la théorie de Von-Karman (Novozhilov (1953)). Kant et Kommineni ont discuté certaines méthodes avec lesquelles on peut diagonaliser la matrice de masse.

Jing et Tzeng (1993, 1993b) ont établi une méthode pour analyser les effets des déformations de cisaillement pour des coques anisotropes laminées et épaisses en utilisant une formulation mixte basée sur la fonctionnelle proposée par Jing et Liao(1989). La fonctionnelle de Jing et Liao (1989), modifiée par le principe de Hellinger-Reissner, sépare le champ des contraintes en deux parties en laissant seulement les déplacements et les contraintes de cisaillement comme variables indépendantes.

Un élément fini iso-paramétrique basé sur un modèle avec déplacements d'ordre supérieur pour l'analyse linéaire et non linéaire, qui tient compte des grands déplacements au sens de Von-Karman, des coques sous charges transversales a été présenté par Kant et Kommineni (1992).

Kant et Ramesh (1976) ont présenté pour leur part une théorie générale des coques orthotropes dans les coordonnées curvilignes orthogonales basée sur le modèle de Hilderbrand et al. (1949). Kant avec ses collègues- après avoir fait beaucoup d'investigations numériques pour des plaques et des coques laminées, soit statiques soit dynamiques- ont prouvé que l'imposition de la condition libre-contrainte au sommet et au fond de la surface du laminé donne une solution plus rapide que celle d'élasticité en 3-D.

Noor et Hartely (1977) ont employé la théorie des coques incomplètes avec déformations de cisaillement et effets de non-linéarité géométrique pour développer des éléments finis quadrilatéraux et triangulaires. Bhimaraddi (1984) a appliqué une variation parabolique de l'épaisseur pour les déformations transversales afin d'analyser le comportement vibratoire linéaire d'une coque cylindrique et isotrope en considérant l'inertie de rotation. Son analyse est basée sur des hypothèses telles que les petits déplacements et l'élasticité linéaire.

Les effets des déformations de cisaillement et d'isotropie transversale ainsi que celui de l'expansion thermique via l'épaisseur des coques cylindriques ont été considérés par Gulati

et Essenberg (1967) et Zukas et Vinson (1971), Dong et ses collègues (1962, 1972), Hsu et Wang (1970) et par Whitney et Sun (1974).

Bert et ses collègues (1967,1981, 1982) ont présenté des solutions exactes pour les vibrations et la flexion des coques ayant deux couches orthogonales. Ces solutions sont limitées aux coques cylindriques et aux distributions sinusoïdales des charges transversales, et la procédure employée est similaire à celle qui avait été utilisée par Whitney et Leissa (1969), Whitney et Pagano (1970), Bert et Chen (1978), Reddy et Chao (1981) pour des plaques laminées.

1.4 Étude de l'interaction dans un système couplé structure-fluide.

L'effet de l'environnement (air, liquide, etc.) sur les vibrations des coques et des plaques est intéressant pour les scientifiques et les ingénieurs qui travaillent dans les secteurs de l'énergie nucléaire, de l'aérospatiale et de la marine.

La plus basse fréquence naturelle de vibration de flexion d'une coque immergée dans ou remplie avec un fluide est inférieure à celle correspondante d'une coque dans l'air. Cette fréquence dépend du niveau du liquide, des formes modales ainsi que des paramètres physiques et géométriques de la coque et du fluide.

L'effet du liquide sur les fréquences naturelles est une combinaison de la distribution de pression hydrodynamique et des forces exercées par le mouvement de la surface libre. Les

coques minces contenant un fluide rencontrées en pratique ont des fréquences de "sloshing" qui sont considérablement en dessous de celles d'un système combiné structure-liquide. L'effet du liquide peut être pris en compte en considérant des masses ajoutées. Les masses effectives sont fonctions des formes modales, des paramètres physiques et géométriques de la coque et du fluide.

Des véhicules de navigation marine, aérienne et même terrestre ainsi que des structures stationnaires sont exposées à des collisions, impacts ou autres charges transitoires et pressions de liquide ; de ce fait, ils peuvent subir des dommages importants (grandes déformations structurales). Par conséquent le besoin de méthodes efficaces et exactes pour l'analyse et le design de structures dans de telles conditions (non-linéarités géométriques et non-linéarités des matériaux, charges fluides, charges transitoires, etc.) est de plus en plus important.

La réponse des coques soumises à un fluide en écoulement ainsi que l'influence de la vitesse d'écoulement sur les vibrations libres des coques ont été étudiées par plusieurs chercheurs : Lakis et Païdoussis (1971), Païdoussis et Denis (1972), Weaver et Unny (1973), Chen (1994), Brenneman et Au-Yang (1992). Païdoussis et Il (1993) ont publié une revue bibliographique élaborée du domaine.

L'analyse dynamique des systèmes couplés structure-liquide a été considérablement revue par Au-Yang (1986) et Brown (1982). L'analyse dynamique d'un système

fluide-structure a été faite par Brennemant et Yang (1992) avec une méthode hybride et modale. Dans leur travail, les modes des structures sont obtenus par la méthode de rigidité tandis que les modes du fluide sont obtenus par la méthode de flexibilité. Jain (1974) a décrit une étude du comportement des vibrations des coques cylindriques, orthotropes et partiellement ou entièrement remplies d'un liquide incompressible non-visqueux.

Crouzet-Pascal et Garnet (1972) ont étudié le comportement dynamique d'une coque cylindrique et circulaire renforcée d'un anneau, immergée dans un liquide et assujettie à un effort radial appliqué subitement. Utilisant le procédé de Rayleigh-Ritz, Ramachandran (1979) a analysé, sans considérer l'effet de cisaillement, les vibrations non linéaires transversales des coques cylindriques et orthotropes dont l'épaisseur varie linéairement et qui sont immergées dans un liquide incompressible, encastrées ou simplement supportées ou une combinaison des deux.

Les vibrations libres des coques cylindriques verticales et simplement supportées remplies partiellement de liquide ou submergées dans un fluide ont été étudiées par Gonçalves et Batista (1987). Ceux-ci ont employé la technique de Rayleigh-Ritz pour obtenir une solution approximative qui coïncide avec la solution exacte des cas vides ou celle d'un cas où la coque est complètement en contact avec le fluide. Leur travail est basé sur la théorie de Sanders (1959).

Ici, le fluide est considéré non visqueux et compressible, et le couplage entre la coque

déformée et ce médium est pris en compte. L'effet de la hauteur variable du fluide ainsi que celui des paramètres géométriques de la coque sur les fréquences naturelles de coque ont été présentés par ces chercheurs.

Han et Liu (1994) ont analysé les vibrations libres des réservoirs cylindriques ayant une variation de l'épaisseur dans la direction axiale et partiellement remplis de liquide. Dans ce travail, la coque est modélisée en utilisant la théorie de Flügge pour le cas isotrope, le fluide est supposé non visqueux et incompressible et l'effet de déformation de cisaillement est négligé.

1.5 Les méthodes de solution.

La solution analytique des équations du mouvement des coques minces est généralement difficile, voire impossible. Seules les méthodes approximatives peuvent être convenablement utilisées (Par exemple, la méthode des différences finies, la méthode de Galerkin, la méthode de Rayleigh-Ritz, la méthode des matrices de transfert et celle des éléments finis). Toutes ces méthodes ont des avantages et des inconvénients. La qualité la plus importante d'une méthode de solution est sa capacité à prédire aussi bien les hautes que les basses fréquences et les modes propres correspondants avec une bonne précision.

Dans la méthode des différences finies, on donne priori des valeurs initiales de la fréquence. Cette procédure exige beaucoup de temps de calcul. De même, la méthode de

Galerkin perd sa précision aux hautes fréquences de la coque. La méthode de Rayleigh-Ritz présente des inconvénients parmi lesquels on retrouve le choix des fonctions de déplacement qui doivent tenir compte des conditions aux rives et la nécessité de retenir un grand nombre de termes pour l'expression des fonctions de déplacement. La méthode des éléments finis [Zienkiewicz (1989), Datt et Touzot (1984), Gallagher (1986), Bathe (1982), Tinawi(1981), Reddy (1984), Shames et Dym (1985), etc.] est, par contre, satisfaisante de ces points de vue.

La précision de la méthode dépend de la nature de ces éléments et des degrés de liberté retenus pour simuler le comportement des coques et des plaques, et de la nature des fonctions d'interpolation. Le travail de Figueiras et Owen (1984) présente quelques éléments qui peuvent être appliqués avec succès aux plaques ainsi qu'aux coques minces et épaisses. Kui, Liu et Zienkiewicz (1985) ont appliqué l'élément fini de type déplacement pour analyser les coques minces.

Pryor et Barker (1971) ont développé un élément plat linéaire basé sur la théorie des plaques anisotropes laminées incluant les déformations de cisaillement (la théorie de RM). Ils ont suggéré une approche où chaque couche de laminé a des degrés de liberté en rotation. De cette façon, la continuité des contraintes transversales à chaque interface du laminé peut être satisfaite.

Hinrichsen et Palazotto (1986) ont utilisé une fonction de spline cubique en utilisant l'hypothèse de Pryor et Barker (1971) afin de représenter les déplacements transversaux

d'une plaque. Schmit et Monforton (1970) ont formulé un élément de coque cylindrique et anisotrope qui permet de considérer la non-linéarité géométrique intermédiaire. D'autres articles récents par Noor et Peters (1986), Meroueh (1986) et Surana (1983, 1986) peuvent être cités dans cette même perspective.

Noor et Peters (1986) ont analysé des panneaux cylindriques, dans le cas non-linéaire, en utilisant une approche par éléments finis d'une coque incomplète qui inclut les déformations de cisaillement afin de déterminer les modes de façon approximative. Par la suite, la technique de Rayleigh-Ritz est utilisée pour déterminer les amplitudes de ces modes.

Il y a aussi beaucoup de logiciels généraux qui permettent d'utiliser la méthode des éléments finis dans le domaine de la mécanique des solides, citons ABAQUS , NASTRAN, ADINA (dans le cas non-linéaire), ANSYS, etc.

Pour avoir une bonne précision en obtenant les hautes fréquences aussi bien que les basses fréquences d'un système couplé, on doit utiliser un très grand nombre d'éléments, ce qui peut causer de grandes difficultés numériques. Pour pallier cette difficulté, l'équipe de recherche dirigée par le professeur A.A. Lakis a développé un nouveau type d'éléments finis. Ce sont des éléments hybrides où les fonctions de déplacement de la méthode des éléments finis sont dérivées de la théorie des coques. Cette méthode a été appliquée aux analyses statique et dynamique des différentes géométries de coques et de plaques.

Les coques cylindriques ont fait l'objet de plusieurs études dans le domaine linéaire et non linéaire : matériau isotrope et anisotrope, géométrie uniforme et axialement non uniforme, coques vides, partiellement ou complètement remplies de liquide, avec ou sans écoulement (liquide à une phase ou diphasée) [Lakis et Païdoussis (1971, 1972) Lakis (1976) Lakis et Doré (1978) Lakis, Sami et Rousselet (1978) Lakis et Laveau (1991) Lakis et Sinno (1992)] ainsi que les coques cylindriques ouvertes (Selmane et Lakis (1997)). D'autre travaux ont été faits sur les coques coniques (Lakis, Van Dyke et Ouriche (1992)) et sphériques (Lakis, Tuy et Selmane (1989)), ainsi que sur des plaques circulaires et annulaires (Lakis et Selmane (1990)).

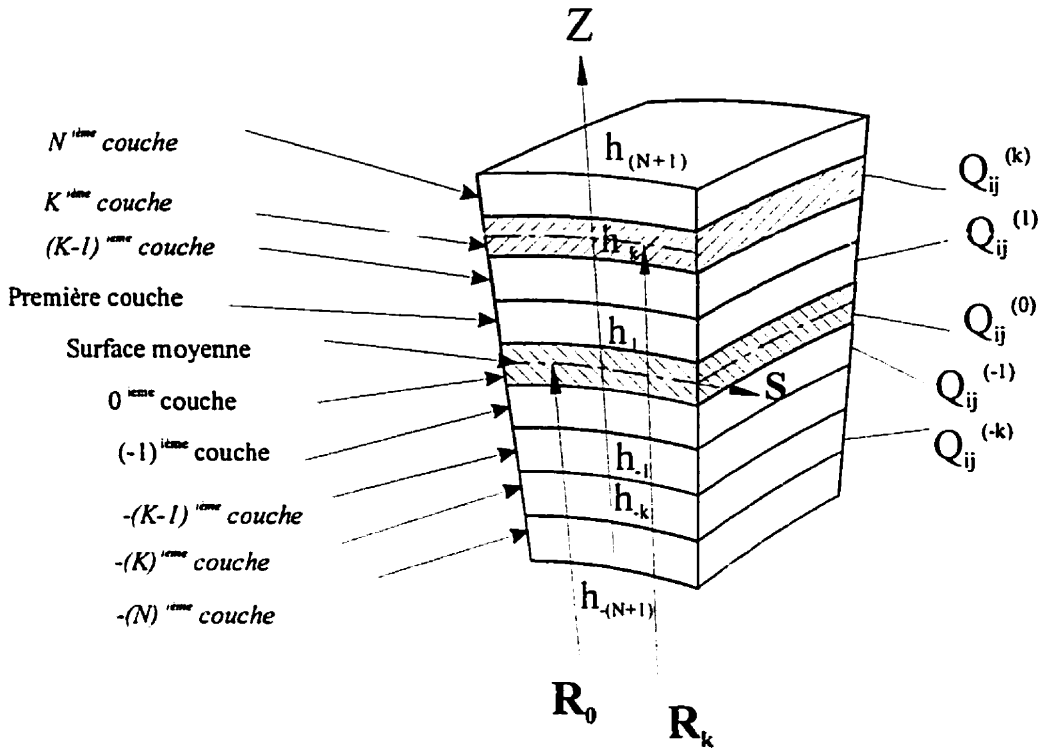

(A)

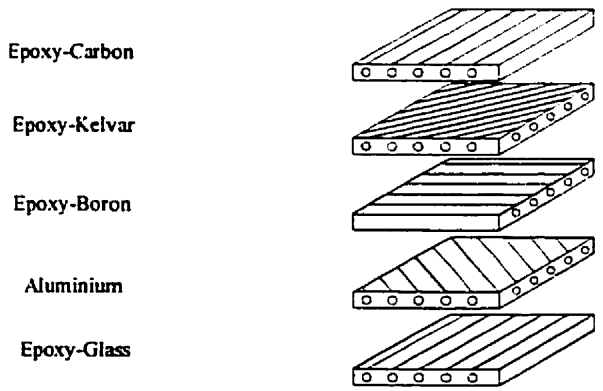

(B)

Figure 1.1 A) La géométrie et notation utilisées pour un laminé
B) La construction d'un laminé

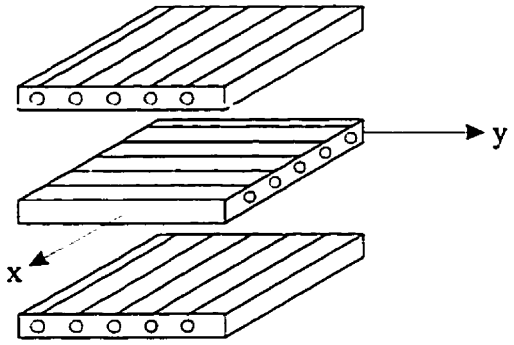

(A)

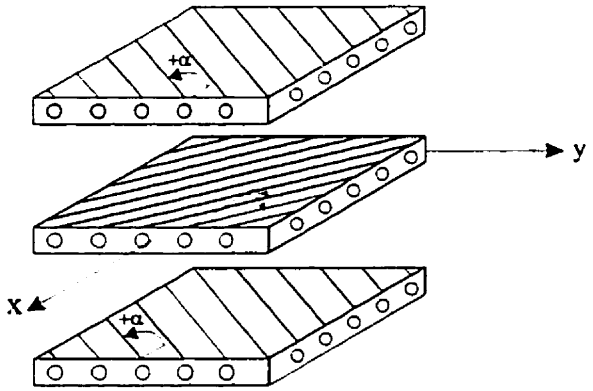

(B)

Figure 1.2 A) Un laminé symétrique de couches orthogonales
B) Un laminé symétrique de couches croisées

CHAPITRE II

GENERAL EQUATIONS OF ANISOTROPIC PLATES AND SHELLS INCLUDING TRANSVERSE SHEAR DEFORMATION, ROTATORY INERTIA AND INITIAL CURVATURE EFFECTS*

M. H. Toorani and A. A. Lakis
Département de Génie Mécanique, École Polytechnique de Montréal
Case Postale 6079, Succ. Centre-ville, Montréal, Canada H3C 3A7

2.1 Abstract

The present work deals with a generalization of geometrically linear shear deformation theory for multilayered anisotropic shells of general shape. No assumptions are made other than to neglect the transverse normal strain. The results, which include the effects of shear deformations and rotatory inertia as well as initial curvature (included in the stress resultants and assumed transverse shear stresses) are deduced by application of the virtual work principle, with displacements and transverse shear as independent variables. These equations are applied to different shell geometries, such as revolution, cylindrical, spherical

---

★: Soumis pour publication dans "International Journal of Engineering Science"

and conical shells as well as rectangular and circular plates.

2.2 Introduction

Shells are widely used as structural elements in modern construction engineering, aircraft construction, ship building, rocket construction, the nuclear, aerospace and aeronautical industries as well as the petroleum and petrochemical industries(pressure vessel, pipeline), etc. It is very important, therefore, that the static and dynamic behavior of these structure when subjected to different loads be clearly understood, in order to be used safely in industry.

The analysis of thin elastic shells under static or dynamic loads has been the focus of a great deal of research. These shells have been studied in the light of such different factors as the large displacements, thickness variation, residual stresses, rotatory inertia, anisotropy, initial curvature and the effect of the surrounding medium(air, liquid), etc.

Many theories have been developed for thin elastic shells, in both linear and non-linear cases, and are based on the first approximation of Love-Kirchhoff theory which, because it does not take transverse shear deformations into account, can be grossly in error in predicting the transverse deflections, buckling loads and natural frequencies. In the case of plates and shells made of advanced laminated composite materials, the prediction errors are even more marked. The transverse shear effect on non-linear vibration and post-buckling behavior is significant especially for the laminates with moderately large thickness.

The present work presents the general equations of anisotropic shells(equilibrium, constitutive and kinematic relations) by considering the effects of shear deformation, rotatory inertia and initial curvature. These relations are then applied to different shell geometries: shells of revolution, cylindrical, spherical and conical shells as well as the circular and rectangular plates.

2.3 Literature Review

The literature review covers three broad areas. In the first, both linear and non-linear theories on analysis of plates and shell structures are discussed. These theories were, in many instances, developed for isotropic materials before being extended to anisotropic material applications. The second part deals with the study of the effect of shear deformation on both the static and dynamic behavior of plates and shells, especially those made of advanced anisotropic materials. In the last part, we briefly discuss the effect of structure-fluid interaction on the vibrations of plates and shells. Special attention is given to cylindrical shells immersed in or filled with a liquid or subjected to a flowing fluid.

A shell structure may be defined as a body enclosed between two closely spaced and curved surface. In general, a shell has three fundamental identifying features: its reference surfaces, its thickness and its edges. Of these, the reference surface is the most significant because the behavior of the shell is governed by the behavior of its reference surface.

Many shell theories are derived from the equations of elasticity. The strain-

displacement relations of shells can be derived from kinematics and the *3-D* strain-displacement relations written in terms of arbitrary curvilinear coordinates [1]. In reality ,the behavior of the top and bottom surfaces of a shell under load can vary widely.

The first attempt to formulate a bending theory of shells from the general equations of elasticity was made by Aron in 1874. A thin shell is one in which the thickness is small compared with the overall dimensions of the reference shell surface, and a two dimensional*(2-D)* theory is used to approximate three dimensional (3-D) phenomena. Many classical shell theories were developed originally for thin elastic shells, and are based on the Love-Kirchhoff assumptions which are: 1) the shell is thin ; 2) the displacements and rotations are small; 3) normals to the shell reference surface before deformation remain normal after deformation; and 4) transverse normal stresses are negligible.

These assumptions led to a thin shell theory that can be viewed as an extension to Kirchhoff plate theory and is often called Kirchhoff-Love shell theory. The effects of the normal transverse strain are often neglected in the kinematics compared to the effects of the in-plane strains due to the thinness of the shell, and shell is assumed to be in an approximate state of plane stress. The in-plane stresses become dominant because the transverse normal stress is, in general, of order h/R times the bending stresses, whereas the transverse shear stresses, obtained from equilibrium conditions, are of order h/L times the bending stresses. Therefore, for L/R less than 10, the transverse normal stress is negligible compared to transverse shear stresses .

On the other hand, the normal transverse strain can generally be included in the analysis through the constitutive relations. In deriving the equilibrium equations, statically equivalent forces and moments acting on the reference surface can be defined by integrating stresses through the thickness. In this way ,the 3-D shell behavior can be fully described using a *2-D* approximation [1-4].The third assumption of the Love-Kirchhoff theory is that transverse shear strains may not be written in terms of displacements, which leads to their being completely ignored although transverse shear stresses should be included in equilibrium equations.

Surveys of various classical shell theories can be found in the works of Bert [5], Reissner [6] and Naghdi [7]. The last truncate the Taylor's series expansion for tangential displacements after linear terms in the thickness coordinate, and many others followed him. An excellent collection of the research carried out on this topic has been produced by Leissa [8]. Elegant representations, both linear and non-linear, of Love's shell theory can be derived strictly via definitions from surface theory without reference to *3-D* relationships [3,9].

One of the best-known of these theories, Love's first approximation, yields sufficiently accurate results when (*i*) the lateral dimension to thickness ratio(L/h) is large; (*ii*) the dynamic excitations are within the low-frequency range; (*iii*) the material anisotropy is not severe. However, the application of such theories to layered anisotropic composites shells could lead to much errors in prediction of natural frequencies, deflections, stresses and

buckling loads .

There is an inconsistency in the original version of Love's theory since all strains do not vanish for rigid body motion. It was perhaps this inconsistency that encouraged many researchers to develop slightly different shell theories. Many shell theories based more or less on Love's assumptions have been developed, each different since each neglects or approximates small terms in its own way. Sanders [45] redefined the force and moment resultants in such a way that all strains vanish for any rigid body motion.

The thin shell assumption in Love's theory have not been taken into account in the theories of Flügge, Lure and Byrne [3], which impose a less restrictive requirement on the thinness of the shell. Their theory also eliminates the rigid body strains anomaly. Koiter [11] discussed the significance of Love's first theory and, based on an order magnitude study, states that refinements of Love first theory cannot consistently be made without including transverse deformation effects. Other prominent theories on this subject include those of Novozhilov [12].

Two types of basic equation, corresponding either to Flügge's or Donnell's equations for isotropic shells, have been formulated in the literature [2,3,13]. Donnell's derivation is not easy to follow, since it completely neglects a number of terms both in the relationships between the changes of curvature and twist and the displacement, and in the relations of stress resultants and moment resultants in terms of displacement.

A small displacement Love theory has been used by Dong et al. [14] for the bending analysis of thin anisotropic plates and shells. These are specialized to give linear Donnell equations for anisotropic cylindrical shells. Bogner et al.[15] developed a linear cylindrical isotropic shell finite element based on the classical shell theory. Morley [16] extended the limits of Donnell theory . Reissner [17] applied the Donnell's assumptions to a shallow spherical shell. The Donnell-Mushtari-Vlasov equations [8] result when Donnell's assumptions are applied to a shallow shell of arbitrary geometry.

Cheng and He [18,19] have developed an exact linear theory for circular cylindrical shell based on Love's assumptions. By retaining all the small terms which are neglected, in varying degrees, by other theories, the usual eighth order operator in the governing equilibrium equation of the transverse displacement can be separated into two complex conjugate operators, thereby reducing the solution's complexity. A general theory for thin isotropic shells, which makes no simplifications for approximations beyond a fundamental hypothesis, was developed by Markov [20].

Padovan [21] used a complex multi-segment numerical integration procedure which can handle the static analysis of mechanically and thermally loaded branches laminated anisotropic shells of revolution with arbitrary meridional variation in thickness and material properties. The governing equations are based on the Love-Reissner theory. They did not consider the effects of shear deformation in their work.

Basar and Ding [22] used the finite rotation elements for the non-linear analysis of thin shell structures. Their work is based on the Kirchhoff-Love hypothesis. In the development of non-linear finite element using the Kirchhoff-Love hypothesis, the essential problem is the elimination of rotation vector(the difference vector)without loss of accuracy. To do this, the Kirchhoff-Love hypothesis is expressed by two sets of equivalent conditions: one of them is used in the form of linear variational equations for elimination of the incremental rotational variables; the other, non-linear one, is needed for the exact calculation of the rotation vector of the fundamental state.

Most of the theories outlined above have been applied to a shell so thin that all transverse shear deformation effects, transverse stresses and strains can be neglected. These transverse effects become more pronounced as the shell becomes thicker relative to its in-plane dimensions and radius curvature. This is particularly true of the transverse shear deformations [11] since classical theories can be grossly in error in predicting transverse deflections, buckling loads or natural frequencies. It is well known from experimental observations that the fact that classical plate theory neglects transverse shear strains leads to under-estimations of deflections and over-predictions of natural frequencies and buckling loads.

These errors are even higher in the case of plates and shells made up of advanced anisotropic laminated composite materials such as graphite-epoxy and boron-epoxy, where the ratio of elastic moduli to shear moduli are very great (i.e. of the order 25 to 40 instead

of 2.6 for isotropic materials). As pointed out by Koiter [11], refinement to Love's approximation theory of thin elastics shells is meaningless unless the effects of transverse shear and normal stresses are taken into account. Transverse shear deformation plays a very important role in reducing the effective flexural stiffness of anisotropic laminated plates and shells because their in-plane elastic modulus to transverse shear modulus ratio is high.

The transverse shear effect on non-linear vibration and post buckling behavior is significant, especially for laminates with moderately significant thickness, a high circumferential wave number and a greater number of layers. Study of shear deformation effects shows that these effects can become quite meaningful for some geometrical parameters, such as small radius-thickness or length-thickness ratios, as well as for shorter wavelengths or longer shells.

In addition to the transverse shear deformation, the initial curvature effect should be considered for the analysis of thick shells as indicated by Voyiadjis and Shi [23] for isotropic materials. The initial curvature effect is very important in making accurate predictions of stresses even in the central region. In the shell structure , the curvature of each parallel surface through the thickness of the shell is different. To consider the initial curvature effect , the term $1+z/R$ has to be included. The presence of curvature effectively increases the structural stiffness.

In the refined shell theories that take the transverse shear deformation effect into account, the normals to the reference surface of shells are permitted to rotate such that plane sections originally perpendicular to the middle surface remain planar, but, as a result of the deformation, are no longer perpendicular. The transverse shear is represented by inclusion of an independent degree of freedom in the kinematics. The shell is still fully described by the behavior of the reference surface and therefore these approaches represent *2-D* theories [24].

Hildebrand et al. [25] were the first to make significant contributions by dispensing with Love's assumption and assuming instead a three terms Taylor's series expansion for the displacement vector for orthotropic and homogeneous shells. Naghdi [26] has employed Reissner's [27] mixed variational principle to develop a complete shell formulation similar to that of Hildebrand et al. [25], retaining two and three terms in the Taylor's series expansions for tangential and transverse displacement components, respectively. The first analysis to incorporate the bending and stretching coupling was carried out by Ambartsumyan [9].

He assumed that the individual orthotropic layers were oriented in such a way that the principal axes of material symmetry coincided with those of the principal coordinates of the shell reference surface. The effects of transverse shear deformation ,transverse normal stresses and transverse normal strain on the behavior of laminated shells can be incorporated, on the basis of a mathematical model, through the inclusion of higher order

terms in the power series expansion of the assumed displacement field.

Dong and Tso [28] were perhaps the first to present a first order shear deformation theory , retaining one and two terms in the Taylor's series for transverse and tangential displacement components, respectively. The theory includes the effects of transverse shear deformation through the shell thickness, and thence they construct a laminated orthotropic shell theory. Hildebrand et al. [25] found that the effects of the additional terms in the transverse displacement that resulted in non-zero transverse normal strains are negligible. Reissner used these kinematic relations to analyse first plates [29]and then sandwich shells[30]. The rotatory inertia terms have been included in the dynamic analysis of plates by Mindlin [31].

The above-mentioned first order shear theories result from the so-called Reissner-Mindlin (RM) kinematics do not satisfy the transverse shear boundary conditions on the top and bottom surfaces of the shell or plate, since a constant shear angle through the thickness is assumed, and plane sections remain plane. For this reason, the theories based on these kinematic relations usually require shear correction factors for equilibrium considerations. The shear correction factors are only functions of lamination parameters(number of layers, stacking sequence, degree of orthotropy and fiber orientation in each individual layer) [32,33].

Levinson [34] and Reddy [35] have developed theories that include terms in in-plane displacement kinematics. They used a parabolic shear strain distribution through the thickness for satisfying zero transverse shear stress on the top and bottom surfaces of the shell, thus producing closer agreement with linear elasticity. The parabolic shear strain distribution has been used to analyze the linear vibrational behavior of isotropic cylindrical shells by Bhimaraddi [36].

The effects of transverse shear deformation and transverse isotropy as well as thermal expansion through the thickness of cylindrica shells were considered by Gulati and Essenburg [37], Zukas and Vinson [38], Dong and his colleagues [14], Hsu and Wang [39], Chaudhuri and Abu-Arja [40] and Khdeir et al. [41].

Whitney and Sun [42,43] developed a shear deformation theory for laminated cylindrical shells that includes both transverse shear deformation and transverse normal strain as well as expansional strains. The theory is based on a displacement field in which the displacements in the surface of the shell are expanded as linear functions of the thickness coordinate and the transverse displacement is expanded as a quadratic function of the thickness coordinate. They discussed some methods by which one can diagnose the mass matrix. They did not consider the product of the first order derivatives of the tangential displacement component with respect to the x, y and z in the strain -displacement relations. These relations are based on the Von Karman's theory [12].

Reddy [44] extended Sanders' [45] theory for simply supported cross-ply laminated shells assuming five degrees of freedom per node. The theory is based on a displacement field in which the displacements of the middle surface are expanded as cubic functions of the thickness coordinate, and the transverse displacement is assumed to be constant through the thickness. The Navier-type exact solutions for bending and natural vibration are presented for cylindrical and spherical shells under simply supported boundary conditions.

A generalization of geometrically linear shear deformation theories for small elastic strains was presented for multilayered axisymmetric shells of general shape by Touratier [46]. He proposed a general shear deformation theory for multilayered , moderately thick, axisymmetric shells. The theory, which is geometrically linear, is developed for small elastic strain and is restricted to axisymmetric shells under axisymmetric loading and classical boundary conditions. The principal advantage of this work is that it does not need shear correction factors.

Static analysis of laminated shells using a refined shear deformation theory was done by Ji-Fan He [47]. According to this theory, the thickness of the shell must be small compared to the principal radii of curvature. It can be expected that the present theory would tend to be fairly accurate for laminated shells with many layers. Hsu and Wang [39] and Di Sciuva [48] proposed a specially designed displacement field with traction continuity at the layer interface and Reissner [49] proposed another type of general shell theory for transversely isotropic materials based on the Reissner mixed variational principle with

independently assumed transverse stresses.

More recently, Jing and Tzeng [50]derived a mixed shear deformation theory for thick laminated shells of general shape based on proposed method of Jing and Liao [51]. The displacement field uses a zig-zag function in addition to the Reissner -Mindlin type in-plane displacements and a constant transverse deflection. Kant and Ramesh [52] developed complete governing equations for a thick laminated composite shell. The theory is based on a three-term Taylor's series expansion of the displacement vector and generalized Hooke's law, as is the displacement model of Hildebrand et al.[25], and is applicable to orthotropic material layers having planes of symmetry coincident with shell coordinates.

Advanced composites materials are being used more and more in a variety of industries due to their high strength and stiffness-to-weight ratios; this has led to a rapid increase in the use of these materials in structural applications during the past decade. Structural elements made up of advanced fiber-reinforced composite materials offer unique advantages over those made of isotropic materials. They are being extensively used in high and low technology areas ,e.g., the aerospace industry, where complex shell configurations are common structural elements.

The filament-winding techniques for manufacturing composite shells of revolution has recently been expanded in aircraft, shipbuilding, petroleum and other industries. In general, these materials are fiber-reinforced laminate, symmetric or anti-symmetric cross-

ply and angle-ply, which consist of numerous layers each with various fiber orientations. Although the total laminate may exhibit orthotropic-like properties, each layer of the laminate is usually anisotropic, thus the individual properties of each layer must be taken into account when attempting to gain insight into the actual stress and strain fields.

By optimizing the properties we can reduce the overall weight of a structure since stiffness and strength can be designed only where they are required. A lower weight structure translates into higher performance. Since optimized structural systems are often more sensitive to instabilities, it is necessary to exercise caution. The designer would be much better able to avoid any instabilities if, when predicting a maximum load capacity, he either knew the equilibrium paths of structural elements or had accurate modeling of the load-displacement behavior of structure.

Anisotropic laminated plates and shells have a further complication which must be considered during the design process: potentially large directional variations of stiffness properties in these structures due to tailoring mean that three-dimensional effects can become very important. The classical two-dimensional assumptions may lead to gross inaccuracies, although they may be valid for an identical shell structure made up of isotropic materials.

However, although they have properties that are superior to isotropic materials, advanced composite structures do present some technical problems in both manufacture and design. For computational reasons, the study of composite materials involves either their

behaviors on the macroscopic level such as linear and nonlinear loading responses, natural frequencies, buckling loads ,etc., or their micro-mechanical properties like cracking, delamination, fiber-matrix debonding, etc.

A number of theories for layered anisotropic shells exist in the literature. Many of these theories were developed for thin shells and are based on the Kirchhoff-Love hypotheses. The first analysis that incorporated the bending-stretching coupling(due to asymmetric lamination in composites) was by Ambartsumayan [9]. In his analysis, he assumed that the individual orthotropic layers were oriented such that the principal axes of material symmetry coincided with the principal coordinates of the shell reference surface. He has written extensively on the matter, basing his work on Love's theory with some discussion of transverse stresses.

The simplifying assumption of laminated anisotropy is often used in applying a 2-D theory to plates and shells consisting of layers of composite materials [24]. In this approach, the individual properties of the composite constituents, the fibers and the matrix, are "smeared" and thus each lamina is treated as an orthotropic material.

A survey of the analysis of multilayered composite shells using Reissner's mixed variational principle was done by Grigolyuk and Kulikov [53]. They maintain that laminated anisotropy assumes perfect bonding between layers, and that the interply adhesive has infinitesimal thickness but infinite stiffness. This approach leads to classical laminated plate

theory (*CLPT*) and the references by Jones [54] and Whitney and Pagano[55], to *CLPT* are based on the Kirchhoff-Love assumptions. However, both references point out that transverse shear deformation is more significant in laminated anisotropic than in similar isotropic constructions.

Bert [56] used Vlasov shell theory to formulate a linear laminated shell theory similar to *CLPT*. Pagano and Wang [57-60] and Srinivas and Rao [61] have developed some exact solutions of *3-D* elasticity equations governing composite plates that have been used to validate the shear theory. They concluded that *CLPT* gives fairly good approximations for both the displacements and stresses if the plate is thin. Higher order shear theories do not give much better transverse stress results but displacements show a marked improvement over *CLPT* for the thicker plates. Transverse stresses are best calculated from equilibrium instead of from the constitutive relations [54]. Ren [62] similarly solved 3-D elasticity equations for a laminated cylindrical shell in cylindrical bending.

His work dealt with what is now known as laminated orthotropic shells rather than with laminated anisotropic shells. In laminated anisotropic shells, the individual layers are, in general, anisotropic, and the principal axes of material symmetry of the individual layers coincide with only one of the principal coordinates of the shell (the thickness-normal coordinate). Whitney and Pagano [55] applied the Reissner-Mindlin theory to composite plate analysis. The buckling of laminated cylindrical shells was studied by Hirano [63]. Reddy and Chao [64] applied the closed form solution to thick composite plates.

Reddy [24,65] has extended the cubic kinematic approach to analysis of laminated anisotropic plates and he has applied them for solving several linear static and buckling problems. Additionally, Soldatos applied the parabolic shear theory to examination of the stability of asymmetrically laminated cylindrical panels [66,67].Cheng and Ho [68] presented an analysis of laminated anisotropic cylindrical shells using Flügge's shell theory [2]. A first approximation theory for the asymmetric deformation of nonhomogeneous, anisotropic, elastic cylindrical shells was derived by Widera and his colleagues [69,70] by means of the asyomptic integration of the elasticity equations. For a homogeneous, isotropic material, the theory reduces to Donnell's equations.

Noor and Peters [71] presented the free vibration analysis of laminated anisotropic shells of revolution as well as the sensitivity of their response to anisotropic material coefficients. Their analytical formulation is based on a form of the Sanders-Budiansky shell theory, including the effects of both transverse shear deformation and the laminated anisotropic material response. Each of shell variables is expressed in terms of trigonometric functions in the circumferential coordinate and a three-field mixed finite element model is used for the discretization in the meridional direction. They used a reduction method involving the successive use of the finite element method and classical Bubnov-Galerkin technique to substantially reduce the size of the eigenvalue problem.

Zienkiewicz [72] introduced a finite element approach with independent transverse displacement and rotational degrees of freedom such that a *RM* shear deformable shell

element is obtained. A small rotation approach for anisotropic shells has been developed by Librescu and Schmidt [73].

Successive approximations, as steps towards an estimate of exact shell strain displacement relations where displacements, large strains and rotations were all initially allowed, are presented for isotropic shells by Sanders [10] and anisotropic shells by Librescu [73].

Kant and Kommineni [74] presented higher order theories for general orthotropic as well as laminated shells. These theories were derived from the three-dimensional elasticity equations by expanding the displacement vector in Taylor's series in the thickness coordinate. Reference [75] presented some elements which can be successfully applied to analysis of both thin and thick plate and shells. Kui et al. [76] applied the finite element method, displacement type, to analyse the thin shells and to overcome the shear locking phenomena.

Pryor and Barker [77] developed a linear plate element based on the *RM* theory. They used a rectangular element with 28 degrees of freedom (8,12,8 for extension, bending and shear effects, respectively) to have the continuity of transverse stress at any interface. Hinrichsen and Palazotto [78] applied a cubic spline function to non-linear analysis of thick composite plates. Their theory is based on the usual Kirchhoff hypothesis. The theory was developed by considering the Lagrangian strains in conjunction with the second Piola-

Kirchhoff stress hypothesis. This formulation leads to a quasi-three dimensional element that combines large displacement with moderately large rotation but is restricted to small strains.

Schmit and Monforton [79] formulated an anisotropic cylindrical shell element which allows them to predict the geometrically nonlinear behavior of sandwich plate and cylindrical shell structures, based on accepted thin shell theory assumptions. Other recent papers by Meroueh [80] and Surana [81,82] can be mentioned. Cylindrical shells are in general use in the aerospace, shipbuilding, structural and petroleum industries. They are the simplest shell structure to analyse yet have many of the characteristics of more complex shell geometries. The linear problem of composite cylindrical shells has been widely investigated by a number of researchers using different shell theories. Based on the Kirchhoff hypothesis, for example, Dong [83] studied the free vibration of laminated orthotropic cylindrical shells with homogeneous boundary conditions.

The governing equations of orthotropic cylindrical shells were solved via a pair of complex conjugate fourth-order differential equations by Cheng and He [19]. Their work is based on the Kirchhoff hypothesis. For the static problem, Flügge and Kelkar [84] and Yao [85] obtained an exact solution for closed isotropic long cylinders under general two-dimensional surface traction.

Using the Forbenius method, Srinivas [61] developed an exact three-dimensional solution for orthotropic finite cylinders with simply supported conditions. Varadan and

Bhaskar [86] also performed the static stress analysis using the procedures proposed by Srinivas[61]. Pagano [87] obtained the stress field for a homogeneous, anisotropic closed cylinder under two-dimensional surface loads in which the problems are independent of the axial coordinate.

Ren [88] presented an exact solution for simply-supported laminated cross-ply circular cylindrical panels of infinite and finite length in the axial direction. Leissa et al. [89] analysed the vibration of cantilevered cylindrical panels by using the Ritz method, with algebraic polynomial functions for the displacements.

Widera and Logan [70] studied the non-homogeneous, anisotropic, circular cylindrical elastic shell, using the method of asymptotic expansion in terms of a small parameter in conjunction with Reissner's variational principle. In their work, the procedure used to derive the shell equation starts with substitution of non-dimensional shell coordinates in terms of characteristic length scale for changes of stresses and displacements and Reissner functional direction. The employment of the formulation in terms of Reissner's principle allows one to obtain automatically all the equations necessary to formulate a complete boundary value problem for a first approximation shell analysis. Non-dimensional stresses, displacements and Reissner functional direction are introduced and considered to be representable by asymptotic expansions in a power series in terms of a small shell parameter.

Recently, Bert and his colleagues [90,91] and Hsu et al. [92] presented exact solutions for bending and vibration of cross-ply, thin cylindrical shells. These solutions are limited to cylindrical shells and sinusoidal distribution of the transverse load, and the procedure used in similar to that used by Whitney and Leissa [93], Whitney and Pagano [55], Bert and Chen [94] , and Reddy and Chao [64] for laminated composite plates.

Tzeng [95] proposed a mixed shear deformation theory for the bending analysis of arbitrarily laminated, anisotropic panels and closed cylinders. The initial curvature effect is included in the strain -displacement relations, stress resultants and assumed transverse shear stresses. Two types of shell geometry, infinitely long cylindrical panels and closed cylinders of finite length, are employed in the numerical study. Suzuki and Leissa [96,97] analysed the free vibration of circular and non-circular cylindrical shells having circumferentially varying thickness.

The static response to the axisymmetric problem of arbitrarily laminated, anisotropic cylindrical shells of finite length using three-dimensional elasticity equations was studied by Jing and Zeng [98]. The closed cylinder is simply supported at both ends. The highly-coupled partial differential equations are reduced to ordinary differential equations with variable coefficients by choosing the solution composed of trigonometric functions along the axial direction.

Kant et al.[52,74] presented various higher order theories for laminated composite

cylindrical shells using C^o continuous finite element formulation. Kant and co-workers did extensive numerical investigations on laminated plates and shells, both static and dynamic analysis, using C^o finite elements and different higher order theories. They proved that the imposition of shear free boundary conditions on the top and bottom bounding planes of the laminate gives stiffer solutions when compared to three-dimensional(*3-D*) elasticity solutions and various displacement models for flat laminates. The one having nine degrees of freedom per node produces results very close to *3-D* elasticity solution.

A higher order shear deformation theory of plates accounting for the Von Karman strains was presented by Reddy [99]. This theory contains the same dependent unknowns as those in the Hencky-Mindlin type first-order shear deformation theory. The displacements are expanded in powers of the thickness of the plate, and accounts for parabolic distribution of the transverse shear strains through the thickness of plate. The Hamilton's principle was used to derive the equations of motions and the Navier solution procedure was used for solve the equations of the simply supported plates.

Jing and Liao [51] proposed a mixed function with displacements and transverse shear stresses as independent variables and established the corresponding partial hybrid stress element for the analysis of thick laminated plates. Some comparison between the results obtained for plates by these two functions were made by Jing and Tzeng [100].

A refined laminated plate theory, developed by Whitney and Sun [42], is applicable to fiber- reinforced composite materials under impact loading. The theory also includes the first symmetric thickness shear and thickness stretch motion, as well as the first anti-symmetric thickness shear mode, by including higher order terms in the displacement expansion about the mid-plane of the laminate in a manner similar to that of Mindlin and Medick [101] for homogeneous isotropic plates.

Reddy and Phan [65] used a higher order shear deformation theory to determine the natural frequencies and buckling loads of elastic plates. The theory accounts for the transverse shear strain and rotatory inertia. This work dealt with the exact solutions of the theory as applied to the free vibration and buckling of isotropic, orthotropic and laminated rectangular plates with simply supported edge conditions.

Reddy [35] developed a higher order shear deformation theory for the laminated composite plates. This theory uses a displacement approach similar to that in the Reissner-Mindlin type theories. The in-plane displacements are expanded as cubic functions of the thickness coordinate and the transverse deflection is constant through plate thickness. The form is dictated by satisfying the conditions that the transverse shear stresses vanish on the plate surfaces and be non-zero elsewhere. This requires the use of a displacement field in which the in-plane displacements are expanded as cubic functions of the thickness coordinate and the transverse deflection is constant through plate thickness.

Ren and Hui [102] formulated a simple theory for non-linear bending of generally laminated composite rectangular plates which taken into account the transverse shear strains by using the principle of virtual displacements. Moreover, because the total deflection of a plate is decomposed into a deflection due to bending and a deflection due to shear, solution of the governing equations of the present theory becomes simpler.

The Jing and Liao's functional, modified from the Hellinger -Reissner principle by separating the stress field into a flexural part and a transverse shear part and leaving only displacements and transverse shear stresses as independent variables, has been used by Jing and Tzeng [50] to analyse laminated plates with satisfactory accuracy.

There are many situations in mechanics in which some simplifying assumptions have been considered to help the analyst in getting timely and accurate results. However, various air, water and land vehicles and structures such as aircraft, rocket, pressure vessel, petroleum and petrochemical units etc., may be subjected to impacts, collisions, blasts and /or other intensive transient loads which can cause large transient structural deformation and damage.

Thin shells subjected to dynamic loads could encounter deflections of the order of the shell thickness or higher. Thin shells could also encounter a phenomenon of dynamic impacts or dynamic buckling and collapse, which are attributed to the change in the equilibrium state characterizing the load-response mode. Response of these kind cannot be

correctly predicted by using the small or intermediate displacement theory. In the intermediate non-linearity approach, the non-linear terms which represent in-plane rotations of the shell are neglected [103,104]. This theory is often used in stability analysis.

The structural elements made up of the advanced composite materials undergo large deformations before they become inelastic, because of the high modulus and high strength properties of composite materials. Therefore, an accurate prediction of transient response is possible only when one accounts for the geometric non-linearity.

There are also cases where structural elements experience only small strains under load but may fail catastrophically due to their geometric configuration. It turns out that this class of structural system can be accurately analysed on the basis of small strain, nonlinear geometrical and linear elastic material behavior. The need for accurate and efficient methods for structural analysis and design ,especially for this category of large-deflection (geometrically non-linear) and elastic -plastic (materially non-linear) dynamic response problems has recently become increasingly apparent.

In the proposed nonlinear analysis methods, e.g. [10,12,105], many of the nonlinear displacement terms may be considered negligible depending, of course, on the specific situation. For example, an accurate load-displacement characterization of a flat plate is based on the Von Karman equation where many nonlinear rotational terms have been omitted. Similar assumptions for shell elements result in equations of the type proposed by Donnell,

Sanders and Novozhilov [105]. These formulations are typically valid for so-called intermediate nonlinearity or theories that allow only moderate rotations.

The strain-displacement relations that include nonlinear displacement terms are used to represent large displacements and rotations of differential elements of the shell. Non-linear vibrations of generally laminated circular cylindrical shells were examined using the Timoshenko-Mindlin kinematics hypothesis and an extension of Donnell's shell theory. The effects of the transverse shear deformation, rotatory inertia and geometrically initial imperfection are included in the analysis. The Galerkin procedure furnishes an infinite series of equations for time functions which can be solved by the method of harmonic balance [106].

It has been recognised that the non-linear behaviour of composite cylindrical shells plays an important role in determining the stability and dynamic response of these shells. Chu [107] first presented an analysis for circular isotropic cylindrical shells with the hardening type of non-linearity for the amplitude-frequency response. Nowinski [108] confirmed the results of Chu [107] by investigating the non-linear vibration of orthotropic cylindrical shells. Later, Evensen [109] pointed out that the mode shape assumed by Chu does not satisfy the condition of continuity of the circumferential in-plane displacement. A more rigorous study of non-linear free flexural vibrations of circular cylindrical shells was conducted by Atluri [110] who compared his results with the available data and concluded

by accepting the possibility of the softening type of non-linearity.

Chen and Babcook [111] adopted a perturbation technique in considering the large-amplitude vibration of a thin-walled cylindrical shell. Ramachandran [112] studied the non-linear vibration of cylindrical shells of varying thickness. Khot [113] studied the post-buckling behavior of a laminated cylindrical shell subjected to axial load and torsion using the Von Karman-Donnell equations. The results obtained by Khot [113] show that, in general, composite shells are less imperfection sensitive than isotropic shells.

Recently, Iu and Chia [114] discussed the non-linear vibration and post-buckling of anti-symmetric cross-ply circular cylindrical shells on the basis of Von Karman-Donnell kinematic assumptions and the effects of transverse shear on the non-linear behavior of these shells using the Timoshenko-Mindlin kinematic hypothesis. They neglected some terms (e.g cross-product of displacement derivatives) in non-linear strain-displacement relations.

Neglecting the transverse rotational nonlinear terms as well will result in a linear Love-type shell theory. These successive approximations to the shell strain-displacement relations are discussed in the paper by Librescu [115] and Sanders [10]. In the last work, the deformations are restricted by the Kirchhoff hypothesis(the transverse shear and normal strains were neglected) , the middle surface strains were assumed small and the rotations were assumed to be moderately small. Most of the above approaches can include various degrees of non-linearity in the strain-displacement relations representing the displacements

and rotations. Considerable simplification was achieved in the Donnell equations by use of the assumption that the non-linear membrane strains derived only from out-of-plane rotations.

For example, non-linear Donnell shallow-shell theory is not suitable for the analysis of shells in which the buckling mode involves fewer than three full waves around the circumference [105]. More accurate non-linear shell equations are given by Sanders and by Novozhilov , but these were somewhat more complex than the Donnell equations. More terms are retained because fewer assumptions are made about the relative magnitude of various terms in the non-linear strain-displacement. Reddy and Chandrashekhara [116] solved laminated shell problems, both cylindrical and spherical, assuming *RM* theory and an intermediate non-linearity. There are few such analytical closed-form solutions for shell geometries, especially those that govern non-linear behavior.

The formulation and computational procedure are presented for the geometrically non-linear analysis of laminated orthotropic and anisotropic composite shells based upon a modified incremental Hellinger-Reissner principal and the total Lagrangian description by Rothert and Di [117]. In this investigation a computational model for a geometrically nonlinear analysis has been studied on the basis of a rational approach for a hybrid stress model. The through-thickness assumption used in the total Lagrangian formulation is introduced, incorporating the nonlinear formulation for a large rotation assumption. Noor and

Peters [118] analyzed the non-linear response of anisotropic cylindrical panel that included transverse shear deformation. Their formulations are based on the Rayleigh-Ritz technique and the Hu-Washizu mixed shallow shell finite element approach.

Stein [119] used truncated series expansions of exact non-linear strain-displacement relations in a shell approach that also included transverse shear deformation. The non-linear strain-displacement relations were expanded into a series that contains all first- and second-degree terms; only the first few terms have been retained for the displacements. Geometrically non-linear quasi-three-dimensional approaches for laminated composite plates and shells have been developed by Palazotto and Witt [120], Hinrichsen and Palazotto [78] and Dennis and Palazotto [121]. Their work is restricted to small strains; the exact Green's strain-displacement and linear strain displacement relations were assumed for the in-plane strains and the transverse strains, respectively, so the accuracy in rotation is limited by linear assumption on the transverse shear strains.

Tsai and Palazotto [122] have developed a finite element formulation for the geometric non-linear vibration analysis of cylindrical shells, based upon a curved quadrilateral, 36 degree of freedoms, thin shell element. The equations of motion are based on a total Lagrangian frame of reference. A β method, which is a generalization of Newmark's time marching integration scheme and the Newton-Raphson iterative method, are both applied in order to solve the set of non-linear equations of motion numerically.

The solution of a set of non-linear, second order differential equations which describe an anisotropic shell of revolution was presented by Martin and Drew [123]. Their analysis is based upon Sanders' non-linear shell theory without considering the shear deformation effects. The method for solving these equations follows the procedure used by Budiansky and Radkowski [124].

Kant and Kommineni [125] presented the geometrically non-linear transient analysis of laminated composite (transversely isotropic) and sandwich shells, based on Von Karman's theory. In the time domain, the explicit central difference integrator is used in conjunction with the special mass matrix diagonalization scheme which conserves the total mass of the element and includes effects due to rotatory inertia terms.

Rotter and Jumikis [105] have presented a set of non-linear strain-displacement relations for axisymmetric thin shells subject to large displacements with moderate rotations, by retaining more terms. Their works is based on Kirchhoff's assumptions. They have shown that nonlinear strains arising from products of in-plane strain terms, which were omitted in previous theories, may be important in certain buckling problems. The new relations are particularly important when branched shells are being studied and when the buckling mode may involve a translation of the branching joint. Their work do not include any numerical result.

A modal approximation in deriving the equations of motion for the non-linear

flexural vibrations of a cylindrical shell by using the Donnell shallow shell theory was presented by Dowell and Ventres [126]. The purpose of their work was to satisfy more accurately the boundary and the continuity conditions and investigate their effects on the form of the modal equations.

Horrigmoe and Bergan [127] presented classical variational principles for non-linear problems by considering incremental deformations of a continuum. Wunderlich [128] and Stricklin et al.[129] have reviewed various principles of incremental analysis and solution procedures for geometrical non-linear problems respectively. Noor and Hartley [130] employed the shallow shell theory with transverse shear strains and geometric non-linearities to develop triangular and quadrilateral finite elements.

Chao and Reddy [131], Reddy and Chandrasekhara [116] have presented a first order shear deformation theory based on kinematic and geometric assumption of Sanders thin shell theory for geometrically non-linear analysis of doubly curved composite shells. An analysis of the dynamic responses of cylindrical shells including geometric and material non-linearities was made by Wu and Witmer [132]. The methods of finite element analysis were applied to the problem of large deflection, elastic-plastic dynamic response of cylindrical shells to transient loading. The formulation is based upon the virtual work principle and D'Alembert's principle. Wu and Witmer used a bilinear polynomial for the axial displacement, and bicubic polynomials for both the circumferential displacement and the transverse displacement, and explicitly excluded rigid body modes.

The analytical solution of shell motion equations is generally considered to be difficult. Approximation methods can be suitably used (e.g. the finite difference, Galerkin, Rayleigh-Ritz, Transfer matrix and finite element methods). All of these methods have advantages and disadvantages. One of the most important criteria in determining the versatility of the resolution is the capacity to predict, with precision, both the high and the low frequencies.

In the finite difference method, the initial values are given and this method requires a great deal of calculation time. The Galerkin approach loose precision in the higher frequencies of shells. The Rayleigh-Ritz method presents several drawbacks, among which are the displacement function choice, which has to take the boundary conditions into account, and the necessity to use a large number of terms to express displacement functions and also in the Galerkin method ,both geometric and force boundary conditions must be satisfied. On the other hand, the finite element method [72,133-136] is satisfactory from these view points.

The accuracy of solutions reached by the finite element displacement formulation depends on whether the assumed functions accurately model the deformations modes of structures. To satisfy this criterion, Lakis and his group have developed a hybrid type of finite element, whereby the displacement functions in the finite element method are derived from Sanders' classical shell theory [45]. This method has been applied with satisfactory results to the dynamic linear and non-linear analysis of cylindrical shells, both closed and

open [137-147], spherical [148], conical [149], isotropic and anisotropic, uniform and axially non-uniform shells, both empty and liquid-filled. This method has also been applied to the dynamic analysis of circular and annular plates by Lakis and Selmane [150-152].

The effect of surrounding medium (air, liquid and etc.) upon the vibration of plates and shells is of primary interest to scientists and engineers working in aerospace, marine and reactor technology. The effect of the fluid on the structural response is usually significant except in the case of extremely thick shells. The dynamic response of the shells when subjected to a flowing fluid, as well as the influence of fluid speed on the shell free vibrations, were studied by several researchers: Lakis and Païdoussis [137-139], Païdoussis and Denis[153], Weaver and Unny [154], Cheng [155] and Jain [156]. Païdoussis and Li made an elaborate review in this field [157].

The fluid effect on the dynamic behavior of the structure can be taken into account by considering the hydrodynamic mass which is added to the mass matrix of the structure. The effective mass is a function of the mode shape being considered, the shell and liquid geometrical parameters, plus the physical parameters. In addition, the forces exerted by free surface motion have to be considered; the pressure distribution due to surface motion during vibration could be neglected, however, since resonant sloshing frequencies of thin shells are considerably below the natural frequencies of the combined fluid-structure system.

The dynamics of coupled fluid-shells were reviewed extensively by Yang [158] and

Brown [159]. Dynamic analysis of the structure-fluid systems was studied by Brenneman and Yang [160], using the modal and hybrid methods. They obtained the structure and fluid modes by applying the stiffness and flexibility methods, following MacNeal's approach. Crouzet-Pascal and Garnet [161] studied a ring-reinforced cylindrical shell immersed in a fluid medium, and its dynamic response to an axisymmetric step pulse. MacNeal [162] presented another approach which is based on a hybrid finite element formulation in which the structure is modeled with displacements as the unknown variables, and a fluid is modeled with pressure as the variables. To utilise existing mainframe structural analysis programs, MacNeal showed how to recover symmetry by manipulating the equations and adding auxiliary variables to the problem.

The free vibration of simply supported vertical cylindrical shells partially filled with or submerged in a fluid has been analyzed by Gonçalves and Batista [163]. The Galerkin method was used to obtain an approximate solution which coincide with the exact solution for the cases of an empty shell or a shell completely in contact with fluid. Their work is based upon the consistent shell theory of Sanders. The fluid is taken as non-viscous and incompressible and the coupling between the deformable shell and this acoustic medium is taken into account.

Since the lowest natural frequency of bending vibration of shells, immersed in or filled with a fluid, is much less than the corresponding natural frequency of the shell in air, they investigated the effects of variable height of fluid on the vibration response of vertical

cylinders filled with or submerged in an acoustic fluid medium. In general, the lowest frequency depends on liquid level, mode shapes and shell and liquid geometrical and physical parameters.

The free vibration analysis of cylindrical storage tanks with axial thickness variation and partially filled with liquid was studied by Han and Liu [164]. The tank is modeled using Flügge's thin shell theory (in the isotropic case)and the fluid in the tank, according to potential flow theory, is assumed to be inviscid and incompressible. In their work, the shear deformation effects have not been considered. They solved the partial differential equations by using the transfer matrix technique.

An analysis of the non-linear vibration of cylindrical shells of varying thickness in an incompressible fluid was made by Ramachandran [112]. The Rayleigh-Ritz procedure was used to analyze non-linear transverse vibrations of elastic, orthotropic cylindrical shells of linearly varying thickness, embedded in an incompressible fluid (there is no shear deformation effect in his work).

In the present thesis, we develop a general linear shell theory -for multilayered laminated anisotropic materials case- which takes into account the transverse shear deformations, rotatory inertia and initial curvature effects which were not considered simultaneously in the previous works. We obtain five coupled second-order differential equations with five independent variables as components of displacement vector. Also, the

equilibrium equations, constitutive and kinematic relations for the following shell and plate geometries are developed: shells of revolution, cylindrical, spherical and conical shells as well as rectangular and circular plates.

The displacement functions presented, for cylindrical shells, in the last section of this paper allow us to study the dynamic behaviour analysis of open or closed cylindrical shells with arbitrary boundary conditions, while most of previous investigations have been limited to simply supported boundary conditions using the Fourier double series in solving the equations of motion.

There are several reasons for undertaking the development of this theory. First, developing a theory for either dynamic or stress analysis of anisotropic laminated plates and shells, with various geometry shapes. The accurate prediction of the dynamic response or failure characteristics of these structures made up from advanced composite materials requires the use of refined theory where the effect of transverse shear deformation and other factors such as rotatory inertia and initial curvature effects are taken into account. This is because the transverse shear deformation plays an important role in reducing the effective flexural stiffness of plates or shells made of these advanced materials than in corresponding isotropic materials, so the present study focuses on this last effect.

The next step deals with the study of the free vibration characteristics of thin anisotropic laminated cylindrical shells based on the present theory. One of the criteria of

success of a method may be considered to be its capability of yielding the high, as well as the low, natural frequencies and modal shapes with comparable high accuracy. The numerical method will be based on a combination of hybrid finite element analysis [139] and refined shear deformation theory of shells. This allows us to use the thin shell equations in full for the determination of the displacement functions, and hence the mass, stiffness and stress-resultant matrices, instead of the more usual polynomial displacement functions.

This formulation yields the natural frequencies and mode shapes of shell defined by arbitrary conditions without changing the displacement functions in each case. Numerical results for fundamental frequencies will be presented for anisotropic laminated cylindrical shells. At the same time, the flowing fluid effect on the natural frequencies of anisotropic, open cylindrical shells will be studied.

2.4 Theoretical Development

This work is based on the following assumptions:

1) Linear elastic behavior of laminated anisotropic materials;

2) Use of the strain-displacement relations expressed in arbitrary orthogonal curvilinear coordinate system;

3) The shell is thin and therefore we assume that the thickness-direction normal stress is negligible compared with stress tangential to the shell surface;

4) The transverse shear deformation, rotatory inertia and initial curvature are considered to influence the governing equations.

2.4.1 Strain-Displacement Relations

The normal and shear strain components are related to the components of the displacement vector by [3]:

$$\varepsilon_i = \frac{\partial}{\partial \alpha_i}\left(\frac{\overline{u_i}}{\sqrt{g_i}}\right) + \frac{1}{2g_i}\sum_{k=1}^{3}\frac{\partial g_i}{\partial \alpha_k}\frac{\overline{u_k}}{\sqrt{g_k}} \qquad i = 1,2,3$$

$$\gamma_{ij} = \frac{1}{\sqrt{g_i g_j}}\left[g_i \frac{\partial}{\partial \alpha_j}\left(\frac{\overline{u_i}}{\sqrt{g_i}}\right) + g_j \frac{\partial}{\partial \alpha_i}\left(\frac{\overline{u_j}}{\sqrt{g_i}}\right)\right] \qquad i = 1,2,3\ ;\ i \neq j \tag{2.1}$$

where α_i ; $\overline{u}_i$ and g_i are, respectively, the curvilinear coordinates of the surface, components of the displacement vector and geometrical scale factor quantities, and are defined below for application to shells (Figure 2.1):

$$\alpha_1 = \alpha_1 \quad \alpha_2 = \alpha_2 \quad \alpha_3 = \zeta$$

$$\overline{u_1} = U_1 \quad \overline{u_2} = U_2 \quad \overline{u_3} = W \tag{2.2}$$

$$g_1 = A_1^2(1+\zeta/R_1)^2 \quad g_2 = A_2^2(1+\zeta/R_2)^2 \quad g_3 = 1$$

where U_1, U_2, W, A_i, R_i and ζ are, respectively, the displacement vector components, Lamé's parameters, the curvature radius and the thickness coordinate. If we substitute equations (2.2) into equations (2.1), we obtain the following strain-displacements equations in the shell space:

$$
\begin{aligned}
\varepsilon_1 &= \frac{1}{A_1(1+\zeta/R_1)}\left(\frac{\partial U_1}{\partial \alpha_1} + \frac{U_2}{A_2}\frac{\partial A_1}{\partial \alpha_2} + \frac{A_1 W}{R_1}\right) \\
\varepsilon_2 &= \frac{1}{A_2(1+\zeta/R_2)}\left(\frac{\partial U_2}{\partial \alpha_2} + \frac{U_1}{A_1}\frac{\partial A_2}{\partial \alpha_1} + \frac{A_2 W}{R_2}\right) \\
\varepsilon_n &= \frac{\partial W}{\partial \zeta} \\
\gamma_{1n} &= \frac{1}{A_1(1+\zeta/R_1)}\frac{\partial W}{\partial \alpha_1} + A_1(1+\zeta/R_1)\frac{\partial}{\partial \zeta}\left[\frac{U_1}{A_1(1+\zeta/R_1)}\right] \\
\gamma_{2n} &= \frac{1}{A_2(1+\zeta/R_2)}\frac{\partial W}{\partial \alpha_2} + A_2(1+\zeta/R_2)\frac{\partial}{\partial \zeta}\left[\frac{U_2}{A_2(1+\zeta/R_2)}\right] \\
\gamma_{12} &= \frac{A_2(1+\zeta/R_2)}{A_1(1+\zeta/R_1)}\frac{\partial}{\partial \alpha_1}\left[\frac{U_2}{A_2(1+\zeta/R_2)}\right] + \frac{A_1(1+\zeta/R_1)}{A_2(1+\zeta/R_2)}\frac{\partial}{\partial \alpha_2}\left[\frac{U_1}{A_1(1+\zeta/R_1)}\right]
\end{aligned}
\tag{2.3}
$$

where ε_i and (γ_{in}, γ_{12}) are, respectively, the normal and shearing strain components. We can assume that the displacement components are presented by the following relationships:

$$
\begin{aligned}
U_1(\alpha_1,\alpha_2,\zeta) &= u_1(\alpha_1,\alpha_2) + \zeta\beta_1(\alpha_1,\alpha_2) \\
U_2(\alpha_1,\alpha_2,\zeta) &= u_2(\alpha_1,\alpha_2) + \zeta\beta_2(\alpha_1,\alpha_2) \\
W(\alpha_1,\alpha_2,\zeta) &= w(\alpha_1,\alpha_2)
\end{aligned}
\tag{2.4}
$$

The β_1 and β_2 represent the rotation of tangents to the reference surface oriented along the parametric lines α_1 and α_2 respectively. We substitute equations (2.4) into equations (2.3):

$$\begin{Bmatrix} \varepsilon_1 \\ \varepsilon_2 \\ \gamma_{12} \\ \gamma_{1n} \\ \gamma_{2n} \end{Bmatrix} = \begin{bmatrix} \frac{1}{(1+\zeta/R_1)} & 0 & 0 & 0 & 0 & 0 \\ 0 & \frac{1}{(1+\zeta/R_2)} & 0 & 0 & 0 & 0 \\ 0 & 0 & \frac{1}{(1+\zeta/R_1)} & \frac{1}{(1+\zeta/R_2)} & 0 & 0 \\ 0 & 0 & 0 & 0 & \frac{1}{(1+\zeta/R_1)} & 0 \\ 0 & 0 & 0 & 0 & 0 & \frac{1}{(1+\zeta/R_2)} \end{bmatrix} \left[\begin{Bmatrix} \varepsilon^o_1 \\ \varepsilon^o_2 \\ \gamma^o_1 \\ \gamma^o_2 \\ \mu^o_1 \\ \mu^o_2 \end{Bmatrix} + \zeta \begin{Bmatrix} \kappa_1 \\ \kappa_2 \\ \tau_1 \\ \tau_2 \\ 0 \\ 0 \end{Bmatrix} \right] \tag{2.5}$$

where:

$$\begin{aligned}
\varepsilon^o_1 &= \frac{1}{A_1}\frac{\partial u_1}{\partial \alpha_1} + \frac{u_2}{A_1 A_2}\frac{\partial A_1}{\partial \alpha_2} + \frac{w}{R_1} \quad ; \quad \kappa_1 = \frac{1}{A_1}\frac{\partial \beta_1}{\partial \alpha_1} + \frac{\beta_2}{A_1 A_2}\frac{\partial A_1}{\partial \alpha_2} \\
\varepsilon^o_2 &= \frac{1}{A_2}\frac{\partial u_2}{\partial \alpha_2} + \frac{u_1}{A_1 A_2}\frac{\partial A_2}{\partial \alpha_1} + \frac{w}{R_2} \quad ; \quad \kappa_2 = \frac{1}{A_2}\frac{\partial \beta_2}{\partial \alpha_2} + \frac{\beta_1}{A_1 A_2}\frac{\partial A_2}{\partial \alpha_1} \\
\gamma^o_1 &= \frac{1}{A_1}\frac{\partial u_2}{\partial \alpha_1} - \frac{u_1}{A_1 A_2}\frac{\partial A_1}{\partial \alpha_2} \quad ; \quad \tau_1 = \frac{1}{A_1}\frac{\partial \beta_2}{\partial \alpha_1} - \frac{\beta_1}{A_1 A_2}\frac{\partial A_1}{\partial \alpha_2} \\
\gamma^o_2 &= \frac{1}{A_2}\frac{\partial u_1}{\partial \alpha_2} - \frac{u_2}{A_1 A_2}\frac{\partial A_2}{\partial \alpha_1} \quad ; \quad \tau_2 = \frac{1}{A_2}\frac{\partial \beta_1}{\partial \alpha_2} - \frac{\beta_2}{A_1 A_2}\frac{\partial A_2}{\partial \alpha_1} \\
\mu^o_1 &= \frac{1}{A_1}\frac{\partial w}{\partial \alpha_1} - \frac{u_1}{R_1} + \beta_1 \quad ; \quad \mu^o_2 = \frac{1}{A_2}\frac{\partial w}{\partial \alpha_2} - \frac{u_2}{R_2} + \beta_2
\end{aligned} \tag{2.6}$$

Where ε^o_i; γ^o_i; κ_i; τ_i and μ^o_i are, respectively, the in-surface normal and in-surface shearing strain, the change in the curvature and torsion of the reference surface and the shearing strain components. The Coddazi conditions which were used for the above equations are:

$$\frac{\partial}{\partial \alpha_2}[A_1(1+\frac{\zeta}{R_1})]=\frac{\partial A_1}{\partial \alpha_2}(1+\frac{\zeta}{R_2}) \quad ; \quad \frac{\partial}{\partial \alpha_1}[A_2(1+\frac{\zeta}{R_2})]=\frac{\partial A_2}{\partial \alpha_1}(1+\frac{\zeta}{R_1}) \tag{2.7}$$

where R_i, ζ, A_i and α_i were defined earlier by equations (2.1,2.2).

2.4.2 The Relationship Between the Stress and Strain Vectors (Hooke's law)

The relationship between the stress and strain vectors (Hooke's law):

$$\{\sigma\} = \lfloor Q \rfloor \{\varepsilon\} \tag{2.8}$$

The constitutive equation of the *Kth* lamina (for a lamina of fibre reinforced composite material) in the lamina reference axes (α, β, γ) can be written as follows (for only one lamina) (Figure 2.2):

$$\begin{Bmatrix} \sigma_\alpha \\ \sigma_\beta \\ \sigma_\gamma \\ \tau_{\beta\gamma} \\ \tau_{\alpha\gamma} \\ \tau_{\alpha\beta} \end{Bmatrix} = \begin{bmatrix} Q_{\alpha\alpha} & Q_{\alpha\beta} & Q_{\alpha\gamma} & 0 & 0 & 0 \\ Q_{\beta\alpha} & Q_{\beta\beta} & Q_{\beta\gamma} & 0 & 0 & 0 \\ Q_{\gamma\alpha} & Q_{\gamma\beta} & Q_{\gamma\gamma} & 0 & 0 & 0 \\ 0 & 0 & 0 & 2Q_{44} & 0 & 0 \\ 0 & 0 & 0 & 0 & 2Q_{55} & 0 \\ 0 & 0 & 0 & 0 & 0 & 2Q_{66} \end{bmatrix} \begin{Bmatrix} \varepsilon_\alpha \\ \varepsilon_\beta \\ \varepsilon_\gamma \\ \gamma_{\beta\gamma} \\ \gamma_{\alpha\gamma} \\ \gamma_{\alpha\beta} \end{Bmatrix} \tag{2.9}$$

The [Q] matrix denotes the elastic stiffness in the material coordinates (locai axes). It is useful to mention that the shear strains used in this work are tensor shear strains, not engineering shear strains.

Qij's elements are defined as follows:

$$\begin{gathered} Q_{\alpha\alpha}=E_{\alpha\alpha}(1-\nu_{\beta\gamma}\nu_{\gamma\beta})/\Delta \quad ; \quad Q_{\alpha\beta}=(\nu_{\beta\alpha}+\nu_{\gamma\alpha}\nu_{\beta\gamma})E_{\alpha\alpha}/\Delta=(\nu_{\alpha\beta}+\nu_{\gamma\beta}\nu_{\alpha\gamma})E_{\beta\beta}/\Delta \\ Q_{\beta\beta}=E_{\beta\beta}(1-\nu_{\gamma\alpha}\nu_{\alpha\gamma})/\Delta \quad ; \quad Q_{\alpha\gamma}=(\nu_{\gamma\alpha}+\nu_{\beta\alpha}\nu_{\gamma\beta})E_{\alpha\alpha}/\Delta=(\nu_{\alpha\gamma}+\nu_{\alpha\beta}\nu_{\beta\gamma})E_{\gamma\gamma}/\Delta \\ Q_{\gamma\gamma}=E_{\alpha\alpha}(1-\nu_{\alpha\beta}\nu_{\beta\alpha})/\Delta \quad ; \quad Q_{\beta\gamma}=(\nu_{\gamma\beta}+\nu_{\alpha\beta}\nu_{\gamma\alpha})E_{\beta\beta}/\Delta=(\nu_{\beta\gamma}+\nu_{\beta\alpha}\nu_{\alpha\gamma})E_{\gamma\gamma}/\Delta \\ Q_{44}=G_{\beta\gamma} \; ; Q_{55}=G_{\alpha\gamma} \; ; Q_{66}=G_{\alpha\beta} \\ \Delta=1-\nu_{\alpha\beta}\nu_{\beta\alpha}-\nu_{\beta\gamma}\nu_{\gamma\beta}-\nu_{\gamma\alpha}\nu_{\alpha\gamma}-2\nu_{\beta\alpha}\nu_{\gamma\beta}\nu_{\alpha\gamma} \end{gathered} \tag{2.10}$$

where $E_{\alpha\beta}$,$G_{\alpha\beta}$ and $\nu_{\alpha\beta}$ are, respectively, Young's moduli of elasticity in the principal directions, rigidity moduli characterizing the change of angles between the principal directions, and the Poisson ratios characterizing the transverse contraction (expansion) under tension (compression) in the directions of the coordinate axes.

The stress-strain relations of the *Kth* lamina in the laminate coordinate axes (1,2,3

global coordinates) can be written as (Figure 2.3):

$$\{\bar{\sigma}\} = \begin{Bmatrix} \sigma_1 \\ \sigma_2 \\ \sigma_n \\ \tau_{2n} \\ \tau_{1n} \\ \tau_{12} \end{Bmatrix} = \begin{bmatrix} \overline{Q_{11}} & \overline{Q_{12}} & \overline{Q_{13}} & 0 & 0 & 2\overline{Q_{16}} \\ \overline{Q_{21}} & \overline{Q_{22}} & \overline{Q_{23}} & 0 & 0 & 2\overline{Q_{26}} \\ \overline{Q_{31}} & \overline{Q_{32}} & \overline{Q_{33}} & 0 & 0 & 2\overline{Q_{36}} \\ 0 & 0 & 0 & 2\overline{Q_{44}} & 2\overline{Q_{45}} & 0 \\ 0 & 0 & 0 & 2\overline{Q_{54}} & 2\overline{Q_{55}} & 0 \\ \overline{Q_{16}} & \overline{Q_{26}} & \overline{Q_{36}} & 0 & 0 & 2\overline{Q_{66}} \end{bmatrix} \begin{Bmatrix} \varepsilon_1 \\ \varepsilon_2 \\ \varepsilon_n \\ \gamma_{2n} \\ \gamma_{1n} \\ \gamma_{12} \end{Bmatrix} \tag{2.11}$$

where :

$$[\overline{Q}] = [T]^{-1}[Q][T] \tag{2.12}$$

The transformation matrix [T] is defined by:

$$[T] = \begin{bmatrix} m^2 & n^2 & 0 & 0 & 0 & 2mn \\ n^2 & m^2 & 0 & 0 & 0 & -2mn \\ 0 & 0 & 1 & 0 & 0 & 0 \\ 0 & 0 & 0 & m & -n & 0 \\ 0 & 0 & 0 & n & m & 0 \\ -mn & mn & 0 & 0 & 0 & (m^2-n^2) \end{bmatrix} \tag{2.13}$$

where: $m \equiv \cos\alpha$, $n \equiv \sin\alpha$

The orientation angle α is measured counter-clockwise from the *1*-axis to the x-axis

(Figure 2.3).

[$\overline{Q}$]'s elements are defined as follows:

$$
\begin{gathered}
\overline{Q_{11}}=Q_{\alpha\alpha}m^4+2(Q_{\alpha\beta}+2Q_{66})m^2n^2+Q_{\beta\beta}n^4;\ \overline{Q_{12}}=(Q_{\alpha\alpha}+Q_{\beta\beta}-4Q_{66})m^2n^2+Q_{\alpha\beta}(m^4+n^4);\ \overline{Q_{13}}=Q_{\alpha\gamma}m^2+Q_{\beta\gamma}n^2 \\
\overline{Q_{16}}=-mn^3Q_{\beta\beta}+m^3nQ_{\alpha\alpha}-mn(m^2-n^2)(Q_{\alpha\beta}+2Q_{66}) \\
\overline{Q_{22}}=Q_{\alpha\alpha}n^4+2(Q_{\alpha\beta}+2Q_{66})m^2n^2+Q_{\beta\beta}m^4;\ \overline{Q_{23}}=Q_{\alpha\gamma}n^2+Q_{\beta\gamma}m^2;\ \overline{Q_{26}}=-m^3nQ_{\beta\beta}+mn^3Q_{\alpha\alpha}+mn(m^2-n^2)(Q_{\alpha\beta}+2Q_{66}) \\
\overline{Q_{33}}=Q_{\gamma\gamma};\ \overline{Q_{36}}=(Q_{\alpha\gamma}-Q_{\beta\gamma})mn;\ \overline{Q_{66}}=(Q_{\alpha\alpha}+Q_{\beta\beta}-2Q_{\alpha\beta})m^2n^2+Q_{66}(m^2-n^2)^2 \\
\overline{Q_{44}}=Q_{44}m^2+Q_{55}n^2;\ \overline{Q_{45}}=(Q_{55}-Q_{44})mn;\ \overline{Q_{55}}=Q_{55}m^2+Q_{44}n^2
\end{gathered}
\tag{2.14}
$$

2.4.3 The Equations of Motion

Using the virtual work principle for the present case yields:

$$
\begin{gathered}
\frac{\partial A_2N_1}{\partial\alpha_1}+\frac{\partial A_1N_{21}}{\partial\alpha_2}+N_{12}\frac{\partial A_1}{\partial\alpha_2}-N_2\frac{\partial A_2}{\partial\alpha_1}+\frac{Q_1A_1A_2}{R_1}+A_1A_2q_1=I_1\ddot{u}_1+I_2\ddot{\beta}_1 \\
\frac{\partial A_1N_2}{\partial\alpha_2}+\frac{\partial A_2N_{12}}{\partial\alpha_1}+N_{21}\frac{\partial A_2}{\partial\alpha_1}-N_1\frac{\partial A_1}{\partial\alpha_2}+\frac{Q_2A_1A_2}{R_2}+A_1A_2q_2=I_1\ddot{u}_2+I_2\ddot{\beta}_2 \\
\frac{\partial A_2Q_1}{\partial\alpha_1}+\frac{\partial A_1Q_2}{\partial\alpha_2}-A_1A_2\left(\frac{N_1}{R_1}+\frac{N_2}{R_2}\right)-A_1A_2q_n=I_1\ddot{w} \\
\frac{\partial A_2M_1}{\partial\alpha_1}+\frac{\partial A_1M_{21}}{\partial\alpha_2}+M_{12}\frac{\partial A_1}{\partial\alpha_2}-M_2\frac{\partial A_2}{\partial\alpha_1}-Q_1A_1A_2=I_2\ddot{u}_1+I_3\ddot{\beta}_1 \\
\frac{\partial A_1M_2}{\partial\alpha_2}+\frac{\partial A_2M_{12}}{\partial\alpha_1}+M_{21}\frac{\partial A_2}{\partial\alpha_1}-M_1\frac{\partial A_1}{\partial\alpha_2}-Q_2A_1A_2=I_2\ddot{u}_2+I_3\ddot{\beta}_2
\end{gathered}
\tag{2.15}
$$

where :

$$I_1, I_2, I_3 = \sum_{k=1}^{N} \int_{h_k}^{h_{k-1}} \rho^{(k)}(1, \zeta, \zeta^2) d\zeta \tag{2.16}$$

where I_i , $\rho^{(k)}$ and ζ are, respectively, inertia moments, density of the Kth's lamina material and the thickness coordinate. The quantities (N_{11}, N_{22}, N_{12}, N_{21}) are called the *in-plane force resultants*, and (M_{11}, M_{22}, M_{12}, M_{21}) are called the *moment resultants*; (Q_{11}, Q_{22}) denote the *transverse force resultants*.

Now, we see that there are five independent boundary conditions to be applied at given edges. The transverse shear deformations do not vanish in the present theory and, therefore, the β_i cannot be expressed in terms of U_i and W. The transverse shear theory recommended here leads to no strains during rigid body motion.

2.4.4 The Stress Resultants and Stress Couples

The stress resultants and stress couples are given by [3] :

$$\begin{Bmatrix} N_1 \\ N_{12} \\ Q_1 \\ M_1 \\ M_{12} \end{Bmatrix} = \int_{\zeta} \begin{Bmatrix} \sigma_1 \\ \tau_{12} \\ \tau_{1n} \\ \sigma_1 \\ \tau_{12} \end{Bmatrix} (1+\zeta/R_2)\, d\zeta \quad ; \quad \begin{Bmatrix} N_2 \\ N_{21} \\ Q_2 \\ M_2 \\ M_{21} \end{Bmatrix} = \int_{\zeta} \begin{Bmatrix} \sigma_2 \\ \tau_{21} \\ \tau_{2n} \\ \sigma_2 \\ \tau_{21} \end{Bmatrix} (1+\zeta/R_1)\, d\zeta \tag{2.17}$$

The quantities (N_{11}, N_{22}, N_{12}, N_{21}) are called the *in-plane force resultants*, and (M_{11}, M_{22}, M_{12}, M_{21}) are called the *moment resultants*; (Q_{11}, Q_{22}) denote the *transverse force resultants*. We notice, in equations (2.17), that the symmetry of the stress tensor ($\tau_{12} = \tau_{21}$) does not necessarily imply that N_{12} and N_{21} are equal or that M_{12} and M_{21} are equal except in the case of a spherical shell, a plate or a thin shell of any shape.

2.4.5 The Constitutive Equations

The stress resultants and stress couples that correspond to the stress components are given by equations (2.17); therefore, by using equations (2.5), (2.11) and (2.17) we have:

$$\begin{Bmatrix} N_1 \\ N_{12} \\ N_2 \\ N_{21} \end{Bmatrix} = \underset{(4\times 4)}{\begin{bmatrix} G_{ij} & A_{ij} \\ A_{ij} & GG_{ij} \end{bmatrix}} \begin{Bmatrix} \varepsilon^o_1 \\ \gamma^o_1 \\ \varepsilon^o_2 \\ \gamma^o_2 \end{Bmatrix} + \underset{(4\times 4)}{\begin{bmatrix} H_{ij} & B_{ij} \\ B_{ij} & HH_{ij} \end{bmatrix}} \begin{Bmatrix} \kappa_1 \\ \tau_1 \\ \kappa_2 \\ \tau_2 \end{Bmatrix} \qquad i,j=1,6,2,6$$

$$\begin{Bmatrix} M_1 \\ M_{12} \\ M_{22} \\ M_{21} \end{Bmatrix} = \underset{(4\times 4)}{\begin{bmatrix} I_{ij} & B_{ij} \\ B_{ij} & II_{ij} \end{bmatrix}} \begin{Bmatrix} \varepsilon^o_1 \\ \gamma^o_1 \\ \varepsilon^o_2 \\ \gamma^o_2 \end{Bmatrix} + \underset{(4\times 4)}{\begin{bmatrix} J_{ij} & D_{ij} \\ D_{ij} & JJ_{ij} \end{bmatrix}} \begin{Bmatrix} \kappa_1 \\ \tau_1 \\ \kappa_2 \\ \tau_2 \end{Bmatrix} \qquad i,j=1,6,2,6 \tag{2.18}$$

where

$$
\begin{aligned}
G_{ij} &= A_{ij} + a_1 B_{ij} + a_2 D_{ij} + a_3 E_{ij} \quad ; \quad H_{ij} = B_{ij} + a_1 D_{ij} + a_2 E_{ij} + a_3 F_{ij} \\
GG_{ij} &= A_{ij} + b_1 B_{ij} + b_2 D_{ij} + b_3 E_{ij} \quad ; \quad HH_{ij} = B_{ij} + b_1 D_{ij} + b_2 E_{ij} + b_3 F_{ij} \\
I_{ij} &= B_{ij} + a_1 D_{ij} + a_2 E_{ij} + a_3 F_{ij} \quad ; \quad J_{ij} = D_{ij} + a_1 E_{ij} + a_2 F_{ij} + a_3 C_{ij} \\
II_{ij} &= B_{ij} + b_1 D_{ij} + b_2 E_{ij} + b_3 F_{ij} \quad : \quad JJ_{ij} = D_{ij} + b_1 E_{ij} + b_2 F_{ij} + b_3 C_{ij}
\end{aligned}
\tag{2.19}
$$

and

$$
\begin{aligned}
a_1 &= \frac{1}{R_2} - \frac{1}{R_1} \quad ; \quad a_2 = \frac{1}{R_1}\left(\frac{1}{R_1} - \frac{1}{R_2}\right) \quad ; \quad a_3 = \frac{1}{R^2{}_1 R_2} \\
b_1 &= \frac{1}{R_1} - \frac{1}{R_2} \quad : \quad b_2 = \frac{1}{R_2}\left(\frac{1}{R_2} - \frac{1}{R_1}\right) \quad : \quad b_3 = \frac{1}{R_2{}^2 R_1}
\end{aligned}
\tag{2.20}
$$

$$
\begin{aligned}
A_{ij} &= \sum_{k=1}^{N} (\overline{Q_{ij}})_k (h_k - h_{k-1}) \quad ; \quad E_{ij} = \frac{1}{4}\sum_{k=1}^{N} (\overline{Q_{ij}})_k (h^4{}_k - h^4{}_{k-1}) \\
B_{ij} &= \frac{1}{2}\sum_{k=1}^{N} (\overline{Q_{ij}})_k (h^2{}_k - h^2{}_{k-1}) \quad ; \quad F_{ij} = \frac{1}{5}\sum_{k=1}^{N} (\overline{Q_{ij}})_k (h^5{}_k - h^5{}_{k-1}) \qquad i,j = 1,6,2,6 \\
D_{ij} &= \frac{1}{3}\sum_{k=1}^{N} (\overline{Q_{ij}})_k (h^3{}_k - h^3{}_{k-1}) \quad ; \quad C_{ij} = \frac{1}{6}\sum_{k=1}^{N} (\overline{Q_{ij}})_k (h^6{}_k - h^6{}_{k-1})
\end{aligned}
\tag{2.21}
$$

N: Number of lamina

Note: $N_{12} \neq N_{21}$ and $M_{12} \neq M_{21}$ and

$$
\frac{1}{(1+\zeta/R)} \cong 1 - \zeta/R + (\zeta/R)^2 - + \cdots \tag{2.22}
$$

This expansion requires only that $(\zeta / R)^2 \ll 1$. So:

$$\int_{-\frac{h}{2}}^{\frac{h}{2}} \frac{1+\frac{\zeta}{R_2}}{1+\frac{\zeta}{R_1}} d\zeta = h\left[1+(\frac{1}{R_1}-\frac{1}{R_2})\frac{h^2}{12R_1}\right] \quad ; \quad \int_{-\frac{h}{2}}^{\frac{h}{2}} \frac{1+\frac{\zeta}{R_2}}{1+\frac{\zeta}{R_1}} \zeta\, d\zeta = -\frac{h^3}{12}(\frac{1}{R_1}-\frac{1}{R_2}) \tag{2.23}$$

We also have:

$$\begin{Bmatrix} Q_1 \\ Q_2 \end{Bmatrix} = \begin{Bmatrix} \int \tau_{1n}(1+\zeta/R_2)d\zeta \\ \int \tau_{2n}(1+\zeta/R_2)d\zeta \end{Bmatrix} = \begin{bmatrix} AA_{55} & A_{45} \\ A_{45} & BB_{44} \end{bmatrix} \begin{Bmatrix} \mu^o{}_1 \\ \mu^o{}_2 \end{Bmatrix} \tag{2.24}$$

where:

$$\begin{aligned} AA_{55} &= A_{55}+a_1B_{55}+a_2D_{55}+a_3E_{55} \quad ; \quad BB_{44} = A_{44}+b_1B_{44}+b_2D_{44}+b_3E_{44} \\ A_{\alpha\beta} &= \sum_{k=1}^{N}(\overline{Q_{\alpha\beta}})_k(h_k-h_{k-1}) \quad ; \quad B_{\alpha\beta} = \frac{1}{2}\sum_{k=1}^{N}(\overline{Q_{\alpha\beta}})_k(h^2{}_k-h^2{}_{k-1}) \qquad \alpha,\beta=4,5 \\ D_{\alpha\beta} &= \frac{1}{3}\sum_{k=1}^{N}(\overline{Q_{\alpha\beta}})_k(h^3{}_k-h^3{}_{k-1}) \quad ; \quad E_{\alpha\beta} = \frac{1}{4}\sum_{k=1}^{N}(\overline{Q_{\alpha\beta}})_k(h^4{}_k-h^4{}_{k-1}) \end{aligned} \tag{2.25}$$

Finally:

$$\left\{ N_{11}N_{12}Q_{11}N_{22}N_{21}Q_{22}M_{11}M_{12}M_{22}M_{21} \right\}^T = \left[P \right]_{(10\times 10)} \left\{ \varepsilon^o{}_1\gamma^o{}_1\mu^o{}_1\varepsilon^o{}_2\gamma^o{}_2\mu^o{}_2\kappa_1\tau_1\kappa_2\tau_2 \right\}^T \tag{2.26}$$

The ε_1^o ; γ_1^o ; ... and τ_2 were given earlier in equations (2.5) whereas P_{ij}'s elements are given in Appendix A and defined by equations (2.19-2.21) and (2.25).

Now, we develop **1)Equilibrium Equations, 2)Constitutive Equations,3)Kinematic Relations (Strain-Displacement Relations)** for the following cases: *a) Shells of Revolution; b) Cylindrical Shells; c) Rectangular Plates; d) Spherical Shells; e) Conical Shells*and *f) Circular Plates.*

2.5 Shells of Revolution

2.5.1 The Equilibrium Equations

We substitute the geometry definitions of shells of revolution (Figure 2.4) into equations (2.15).

$$
\begin{aligned}
&\frac{1}{R_\varphi R_\theta \sin\varphi}[N_\varphi R_\theta \cos\varphi + N_{\varphi,\varphi} R_\theta \sin\varphi + N_{\theta\varphi,\theta} R_\varphi - N_\theta R_\theta \cos\varphi] + \frac{Q_\varphi}{R_\varphi} + q_\varphi = I_1 \ddot{u}_\varphi + I_2 \ddot{\beta}_\varphi \\
&\frac{1}{R_\varphi R_\theta \sin\varphi}[N_{\theta,\theta} R_\varphi + N_{\theta\varphi} R_\theta \cos\varphi + N_{\varphi\theta,\varphi} R_\theta \sin\varphi + N_{\varphi\theta} R_\theta \cos\varphi] + \frac{Q_\theta}{R_\theta} + q_\theta = I_1 \ddot{u}_\theta + I_2 \ddot{\beta}_\theta \\
&\frac{1}{R_\varphi R_\theta \sin\varphi}[Q_\varphi R_\theta \cos\varphi + Q_{\varphi,\varphi} R_\theta \sin\varphi + Q_{\theta,\theta} R_\varphi] - \frac{N_\varphi}{R_\varphi} - \frac{N_\theta}{R_\theta} + q_n = I_1 \ddot{w} \\
&\frac{1}{R_\varphi R_\theta \sin\varphi}[M_{\varphi,\varphi} R_\theta \sin\varphi + M_\varphi R_\theta \cos\varphi + M_{\theta\varphi,\theta} R_\varphi - M_\theta R_\theta \cos\varphi] - Q_\varphi = I_2 \ddot{u}_\varphi + I_3 \ddot{\beta}_\varphi \\
&\frac{1}{R_\varphi R_\theta \sin\varphi}[M_{\theta,\theta} R_\varphi + M_{\varphi\theta,\varphi} R_\theta \sin\varphi + M_{\varphi\theta} R_\theta + M_{\theta\varphi} R_\theta \cos\varphi] - Q_\theta = I_2 \ddot{u}_\theta + I_3 \ddot{\beta}_\theta
\end{aligned}
\tag{2.27}
$$

where the (φ, θ) and ($R\varphi$, $R\theta$) are curvilinear coordinates and curvature radius of the revolution surface, respectively (Figure 2.4).

2.5.2 Constitutive Equations

We have the same equations as those of (2.26), but the definitions given in equations (2.20) must be changed.

$$
\begin{aligned}
&a_1 = \frac{1}{R_\theta} - \frac{1}{R_\varphi} \;;\; a_2 = \frac{1}{R_\varphi}\left(\frac{1}{R_\varphi} - \frac{1}{R_\theta}\right) \;;\; a_3 = \frac{1}{R^2_\varphi R_\theta} \\
&b_1 = \frac{1}{R_\varphi} - \frac{1}{R_\theta} \;;\; b_2 = \frac{1}{R_\theta}\left(\frac{1}{R_\theta} - \frac{1}{R_\varphi}\right) \;;\; b_3 = \frac{1}{R_\varphi R^2_\theta}
\end{aligned}
\tag{2.28}
$$

The constitutive equation is given in Appendix A-2.

2.5.3 Kinematic relations (Linear Strain-Displacement Relations)

Using geometrical parameters given in (Figure 2.4), equations (2.5) can be defined as shown below:

$$\begin{Bmatrix} \varepsilon_\varphi \\ \varepsilon_\theta \\ \gamma_{\varphi\theta} \\ \gamma_{\varphi n} \\ \gamma_{\theta n} \end{Bmatrix} = \begin{bmatrix} \frac{1}{(1+\zeta/R_1)} & 0 & 0 & 0 & 0 & 0 \\ 0 & \frac{1}{(1+\zeta/R_2)} & 0 & 0 & 0 & 0 \\ 0 & 0 & \frac{1}{(1+\zeta/R_1)} & \frac{1}{(1+\zeta/R_2)} & 0 & 0 \\ 0 & 0 & 0 & 0 & \frac{1}{(1+\zeta/R_1)} & 0 \\ 0 & 0 & 0 & 0 & 0 & \frac{1}{(1+\zeta/R_2)} \end{bmatrix} \left[\begin{Bmatrix} \varepsilon^o_\varphi \\ \varepsilon^o_\theta \\ \gamma^o_\varphi \\ \gamma^o_\theta \\ \mu^o_\varphi \\ \mu^o_\theta \end{Bmatrix} + \zeta \begin{Bmatrix} \kappa_\varphi \\ \kappa_\theta \\ \tau_\varphi \\ \tau_\theta \\ 0 \\ 0 \end{Bmatrix} \right] \tag{2.29}$$

where

$$\begin{aligned}
\varepsilon^o_\varphi &= \frac{1}{R_\varphi}\left(W + \frac{\partial U_\varphi}{\partial \varphi}\right) &&; \quad \kappa_\varphi = \frac{1}{R_\varphi}\frac{\partial \beta_\varphi}{\partial \varphi} \\
\varepsilon^o_\theta &= \frac{1}{R_\theta \sin\varphi}\frac{\partial U_\theta}{\partial \theta} + \frac{1}{R_\varphi} cotg\varphi U_\varphi + \frac{W}{R_\theta} &&; \quad \kappa_\theta = \frac{1}{R_\theta \sin\varphi}\frac{\partial \beta_\theta}{\partial \theta} + \frac{\beta_\varphi}{R_\varphi} cotg\varphi \\
\gamma^o_\varphi &= \frac{1}{R_\varphi}\frac{\partial U_\theta}{\partial \varphi} &&; \quad \tau_\varphi = \frac{1}{R_\varphi}\frac{\partial \beta_\theta}{\partial \varphi} \\
\gamma^o_\theta &= \frac{1}{R_\theta \sin\varphi}\frac{\partial U_\varphi}{\partial \theta} - \frac{U_\theta}{R_\varphi} cotg\varphi &&; \quad \tau_\theta = \frac{1}{R_\theta \sin\varphi}\frac{\partial \beta_\varphi}{\partial \theta} - \frac{\beta_\theta}{R_\varphi} cotg\varphi \\
\mu^o_\varphi &= \frac{1}{R_\varphi}\frac{\partial W}{\partial \varphi} - \frac{U_\varphi}{R_\varphi} + \beta_\varphi &&; \quad \mu^o_\theta = \frac{1}{R_\theta \sin\varphi}\frac{\partial W}{\partial \theta} - \frac{U_\theta}{R_\theta} + \beta_\theta
\end{aligned} \tag{2.30}$$

2.6 Cylindrical Shells

2.6.1 The Equilibrium Equations

Using the geometry definitions of circular cylindrical shells given in (Figure 2.5), equations (2.27) will become:

$$
\begin{aligned}
&\frac{\partial N_{xx}}{\partial x}+\frac{1}{R}\frac{\partial N_{\theta x}}{\partial \theta}+q_x=I_1\ddot{u}_x+I_2\ddot{\beta}_x \\
&\frac{\partial N_{x\theta}}{\partial x}+\frac{1}{R}\frac{\partial N_{\theta\theta}}{\partial \theta}+\frac{Q_{\theta\theta}}{R}+q_\theta=I_1\ddot{u}_\theta+I_2\ddot{\beta}_\theta \\
&\frac{\partial Q_{xx}}{\partial x}+\frac{1}{R}\frac{\partial Q_{\theta\theta}}{\partial \theta}-\frac{N_{\theta\theta}}{R}+q_n=I_1\ddot{w} \\
&\frac{\partial M_{xx}}{\partial x}+\frac{1}{R}\frac{\partial M_{\theta x}}{\partial \theta}-Q_{xx}=I_2\ddot{u}_x+I_3\ddot{\beta}_x \\
&\frac{1}{R}\frac{\partial M_{\theta\theta}}{\partial \theta}+\frac{\partial M_{x\theta}}{\partial x}-Q_{x\theta}=I_2\ddot{u}_\theta+I_3\ddot{\beta}_\theta
\end{aligned}
\tag{2.31}
$$

where x and θ are curvilinear coordinates of the cylindrical shells (Figure 2.5)

2.6.2 Constitutive Equations

Equation (2.26) can be used by changing the definitions given in (Figure 2.5). This equation is given in Appendix A-2.

$$a_1 \cdot \frac{1}{R}\,;\ a_2 \cdot 0.\,;\ a_3 \cdot 0.\,;\ b_1 \cdot \frac{1}{R}\,;\ b_2 \cdot \frac{1}{R^2}\,;\ b_3 \cdot 0. \tag{2.32}$$

2.6.3 Kinematic Relations(Linear Strain-Displacement Relations)

The kinematic relations are obtained by using equation (2.30) and shell geometry definitions.

$$\varepsilon^{o}_{x}=\frac{\partial U_{x}}{\partial x} \quad ; \quad \varepsilon^{o}_{\theta}=\frac{1}{R}\frac{\partial U_{\theta}}{\partial \theta}+\frac{W}{R} \quad ; \quad \gamma^{o}_{x}=\frac{\partial U_{\theta}}{\partial x} \quad ; \quad \gamma^{o}_{\theta}=\frac{1}{R}\frac{\partial U_{x}}{\partial \theta}$$

$$\kappa_{x}=\frac{\partial \beta_{x}}{\partial x} \quad ; \quad \kappa_{\theta}=\frac{1}{R}\frac{\partial \beta_{\theta}}{\partial \theta} \quad ; \quad \tau_{x}=\frac{\partial \beta_{\theta}}{\partial x} \quad ; \quad \tau_{\theta}=\frac{1}{R}\frac{\partial \beta_{x}}{\partial \theta} \tag{2.33}$$

$$\mu^{o}_{x}=\frac{\partial W}{\partial x}+\beta_{x} \quad ; \quad \mu^{o}_{\theta}=\frac{1}{R}\frac{\partial W}{\partial \theta}-\frac{U_{\theta}}{R}+\beta_{\theta}$$

Substituting the above equations into the constitutive equations (taking into account the coefficients which were given in equations (2.32)) and then into equations (2.31), we will obtain:

$$L_{k}=(U,V,W,\beta_{x},\beta_{\theta},\overline{P}_{ij})=0. \quad ;(k=1,2,\ldots,5) \tag{2.34}$$

These relations are defined fully by the equations given in Appendix A-2. In order to compare them with *classical shell theory,* the three equations of motion for cylindrical shells are also given in Appendix A [147].

2.7 Rectangular Plates

2.7.1 The Equilibrium Equations

The same cylindrical shell equations are used, taking into account the rectangular plate geometry definitions (Figure 2.6), so equations (2.31) become:

$$
\begin{aligned}
&\frac{\partial N_{xx}}{\partial x}+\frac{\partial N_{yx}}{\partial y}+q_x=I_1\ddot{u}_x+I_2\ddot{\beta}_x\\
&\frac{\partial N_{xy}}{\partial x}+\frac{\partial N_{yy}}{\partial y}+q_y=I_1\ddot{u}_y+I_2\ddot{\beta}_y\\
&\frac{\partial Q_{xx}}{\partial x}+\frac{\partial Q_y}{\partial y}+q_n=I_1\ddot{w}\\
&\frac{\partial M_{xx}}{\partial x}+\frac{\partial M_{yx}}{\partial y}-Q_{xx}=I_2\ddot{u}_x+I_3\ddot{\beta}_x\\
&\frac{\partial M_{xy}}{\partial x}+\frac{\partial M_{yy}}{\partial y}-Q_{yy}=I_2\ddot{u}_y+I_3\ddot{\beta}_y
\end{aligned}
\tag{2.35}
$$

2.7.2 Constitutive Equations

We have the same equations as those of (2.26), but the definitions (2.20) must be changed. This equation is defined in Appendix A-2.

$$a_1=a_2=a_3=b_1=b_2=b_3=0. \tag{2.36}$$

2.7.3 Kinematic Relations(Linear Strain-Displacement Relations)

These relations can be obtained by substituting the structural geometry definitions into the kinematic relations of cylindrical shells (2.33).

$$
\begin{aligned}
&\varepsilon^o{}_x=\frac{\partial U_x}{\partial x}\ ;\ \varepsilon^o{}_y=\frac{\partial U_y}{\partial y}\ ;\ \gamma^o{}_x=\frac{\partial U_y}{\partial x}\ ;\ \gamma^o{}_y=\frac{\partial U_x}{\partial y}\\
&\kappa_x=\frac{\partial \beta_x}{\partial x}\ ;\ \kappa_y=\frac{\partial \beta_y}{\partial y}\ ;\ \tau_x=\frac{\partial \beta_y}{\partial x}\ ;\ \tau_y=\frac{\partial \beta_x}{\partial y}\\
&\mu^o{}_x=\frac{\partial W}{\partial x}+\beta_x\ ;\ \mu^o{}_y=\frac{\partial W}{\partial y}+\beta_y
\end{aligned}
\tag{2.37}
$$

Now, we can substitute the constitutive equations into equations (2.35) in the same

way that we obtained the five differential equations for the case of cylindrical shells, and can obtain the implicit equations as (2.34). These equations are given fully in Appendix B-2.

2.8 Spherical Shells

2.8.1 The Equilibrium Equations

The equilibrium equations for the spherical shells can be derived by using the equations (2.27) and following definitions (Figure 2.7).

$$
\begin{gathered}
r_\theta = r_\varphi = R \\
\frac{\operatorname{cosec}\varphi}{R}[N_\varphi \cos\varphi + N_{\varphi,\varphi}\sin\varphi + N_{\theta\varphi,\theta} - N_\theta \cos\varphi] + \frac{Q_\varphi}{R} + q_\varphi = I_1 \ddot{u}_\varphi + I_2 \ddot{\beta}_\varphi \\
\frac{1}{R}[N_{\theta,\theta}\operatorname{cosec}\varphi + N_{\theta\varphi} cotg\varphi + N_{\varphi\theta,\varphi} + N_{\varphi\theta} cotg\varphi] + \frac{Q_\theta}{R} + q_\theta = I_1 \ddot{u}_\theta + I_2 \ddot{\beta}_\theta \\
\frac{1}{R}[Q_\varphi cotg\varphi + Q_{\varphi,\varphi} + Q_{\theta,\theta}\operatorname{cosec}\varphi] - \frac{N_\varphi}{R} - \frac{N_\theta}{R} + q_n = I_1 \ddot{w} \\
\frac{1}{R}[M_{\varphi,\varphi} + M_\varphi cotg\varphi + M_{\theta\varphi,\theta}\operatorname{cosec}\varphi - M_\theta cotg\varphi] - Q_\varphi = I_2 \ddot{u}_\varphi + I_3 \ddot{\beta}_\varphi \\
\frac{1}{R}[M_{\theta,\theta}\operatorname{cosec}\varphi + M_{\varphi\theta,\varphi} + M_{\varphi\theta} cotg\varphi + M_{\theta\varphi} cotg\varphi] - Q_\theta = I_2 \ddot{u}_\theta + I_3 \ddot{\beta}_\theta
\end{gathered}
\tag{2.38}
$$

2.8.2 Constitutive Equations

We have the same equations as in (2.26), but the definitions given in (2.20) must be changed. These relations are given fully in Appendix A-2.

$$
a_1 = a_2 = b_1 = b_2 = 0. \quad ; \quad a_3 = b_3 = \frac{1}{R^3} \tag{2.39}
$$

2.8.3 Kinematic Relations

Substituting $r_\theta = r_\varphi = R$ into the definitions of (2.30), equations (2.5) are defined as below:

$$\varepsilon^o_\varphi = \frac{1}{R}\left(\frac{\partial U_\varphi}{\partial \varphi} + W\right) \;;\; \varepsilon^o_\theta = \frac{1}{R\sin\varphi}\frac{\partial U_\theta}{\partial \theta} + \frac{1}{R}cotg\varphi U_\varphi + \frac{W}{R} \;;\; \gamma^o_\varphi = \frac{1}{R}\frac{\partial U_\theta}{\partial \varphi} \;;\; \gamma^o_\theta = \frac{1}{R\sin\varphi}\frac{\partial U_\varphi}{\partial \theta} - \frac{1}{R}cotg\varphi U_\theta$$

$$\kappa_\varphi = \frac{1}{R}\frac{\partial \beta_\varphi}{\partial \varphi} \;;\; \kappa_\theta = \frac{1}{R\sin\varphi}\frac{\partial \beta_\theta}{\partial \theta} + \frac{1}{R}cotg\varphi\beta_\varphi \;;\; \tau_\varphi = \frac{1}{R}\frac{\partial \beta_\theta}{\partial \varphi} \;;\; \tau_\theta = \frac{1}{R\sin\varphi}\frac{\partial \beta_\varphi}{\partial \theta} - \frac{1}{R}cotg\varphi\beta_\theta \tag{2.40}$$

$$\mu^o_\varphi = \frac{1}{R}\frac{\partial W}{\partial \varphi} - \frac{U_\varphi}{R} + \beta_\varphi \;;\; \mu^o_\theta = \frac{1}{R\sin\varphi}\frac{\partial W}{\partial \theta} - \frac{U_\theta}{R} + \beta_\theta$$

Now, we substitute relations (2.40) into the constitutive equations and then into equations (2.38), giving five differential equations which describe the equations of motion in terms of the displacement field and mechanical properties of the shell, so that we have the same implicit equations as in (2.34). *Li*'s equations are given in Appendix C-2.

2.9 Conical Shells

2.9.1 The equilibrium Equations

We substitute the geometry definitions of conical shells (Figure 2.8) into equations (2.27):

$$
\begin{aligned}
\frac{\operatorname{cosec}\alpha}{x}N_{\theta x,\theta}+N_{x,x}+q_x&=I_1\ddot{u}_x+I_2\ddot{\beta}_x\\
\frac{\operatorname{cosec}\alpha}{x}N_{\theta,\theta}+N_{x\theta,x}+\frac{1}{x\tan\alpha}Q_\theta+q_\theta&=I_1\ddot{u}_\theta+I_2\ddot{\beta}_\theta\\
\frac{\operatorname{cosec}\alpha}{x}Q_{\theta,\theta}+Q_{x,x}-\frac{1}{x\tan\alpha}N_\theta+q_n&=I_1\ddot{w}\\
\frac{\operatorname{cosec}\alpha}{x}M_{\theta x,\theta}+M_{x,x}-Q_x&=I_2\ddot{u}_x+I_3\ddot{\beta}_x\\
\frac{\operatorname{cosec}\alpha}{x}M_{\theta,\theta}+M_{x\theta,x}-Q_\theta&=I_2\ddot{u}_\theta+I_3\ddot{\beta}_\theta
\end{aligned}
\tag{2.41}
$$

2.9.2 Constitutive Equations

Equation (2.26) has to be modified by changing the definitions given in (2.20) to obtain the constitutive equation of the conical shells. This equation is defined in Appendix A-2.

$$
\begin{aligned}
a_1&=\frac{1}{x\tan\alpha} \quad ; \quad a_2=0. \quad ; \quad a_3=0.\\
b_1&=-\frac{1}{x\tan\alpha} \quad ; \quad b_2=\frac{1}{x^2\tan^2\alpha} \quad ; \quad b_3=0.
\end{aligned}
\tag{2.42}
$$

2.9.3 Kinematic Relations (Linear Strain-Displacement Relations)

These relations can be obtained by using the strain-displacement relations of shells of revolution (2.30) and conical shell geometry definitions given in (Figure 2.8).

$$
\begin{aligned}
&\varepsilon^o{}_x=\frac{\partial U_x}{\partial x} \quad ; \quad \varepsilon^o{}_\theta=\frac{1}{x\sin\alpha}\frac{\partial U_\theta}{\partial\theta}+\frac{W}{x\tan\alpha} \quad ; \quad \gamma^o{}_x=\frac{\partial U_\theta}{\partial x} \quad ; \quad \gamma^o{}_\theta=\frac{1}{x\sin\alpha}\frac{\partial U_x}{\partial\theta}\\
&\kappa_x=\frac{\partial\beta_x}{\partial x} \quad ; \quad \kappa_\theta=\frac{1}{x\sin\alpha}\frac{\partial\beta_\theta}{\partial\theta} \quad ; \quad \tau_x=\frac{\partial\beta_\theta}{\partial x} \quad ; \quad \tau_\theta=\frac{1}{x\sin\alpha}\frac{\partial\beta_x}{\partial\theta}\\
&\mu^o{}_x=\frac{\partial W}{\partial x}+\beta_x \quad ; \quad \mu^o{}_\theta=\frac{1}{x\sin\alpha}\frac{\partial W}{\partial\theta}-\frac{U_\theta}{x\tan\alpha}+\beta_\theta
\end{aligned}
\tag{2.43}
$$

The five differential equations of motion for conical shells, in terms of the displacement field and mechanical properties of shells, can be obtained by substituting the kinematic relations first into the constitutive equations, and then into the equilibrium equations. These implicit equations L_i's are given fully in Appendix D-2.

2.10 Circular Plates

2.10.1 The Equilibrium Equations

These equations are obtained by using circular plate geometry definitions (Figure 2.9) and the same equations as we used for conical shells (2.41).

$$\begin{aligned}
&\frac{1}{R}\frac{\partial N_{\theta r}}{\partial \theta}+\frac{\partial N_{rr}}{\partial r}+q_r=I_1\ddot{u}_r+I_2\ddot{\beta}_r\\
&\frac{1}{R}\frac{\partial N_{\theta\theta}}{\partial \theta}+\frac{\partial N_{r\theta}}{\partial r}+q_\theta=I_1\ddot{u}_\theta+I_2\ddot{\beta}_\theta\\
&\frac{1}{R}\frac{\partial Q_{\theta\theta}}{\partial \theta}+\frac{\partial Q_{rr}}{\partial r}+q_n=I_1\ddot{w}\\
&\frac{1}{R}\frac{\partial M_{\theta r}}{\partial \theta}+\frac{\partial M_{rr}}{\partial r}-Q_{rr}=I_2\ddot{u}_r+I_3\ddot{\beta}_r\\
&\frac{1}{R}\frac{\partial M_{\theta\theta}}{\partial \theta}+\frac{\partial M_{r\theta}}{\partial r}-Q_{\theta\theta}=I_2\ddot{u}_\theta+I_3\ddot{\beta}_\theta
\end{aligned} \tag{2.44}$$

2.10.2 Constitutive Equations

Changing the relations defined in (2.20) and substituting in Equations (2.26), the constitutive equation for a circular plate can be obtained and is given in Appendix A-2.

$$a_1=a_2=a_3=b_1=b_2=b_3=0. \tag{2.45}$$

2.10.3 Kinematic Relations (Linear Strain-Displacement Relations)

These equations are obtained by substituting the geometry definitions of circular plates into the conical shell kinematic relations:

$$\varepsilon^o_r = \frac{\partial U_r}{\partial r} \;;\; \varepsilon^o_\theta = \frac{1}{R}\frac{\partial U_\theta}{\partial \theta} \;;\; \gamma^o_r = \frac{\partial U_\theta}{\partial r} \;;\; \gamma^o_\theta = \frac{1}{R}\frac{\partial U_r}{\partial \theta}$$

$$\kappa_r = \frac{\partial \beta_r}{\partial r} \;;\; \kappa_\theta = \frac{1}{R}\frac{\partial \beta_\theta}{\partial \theta} \;;\; \tau_r = \frac{\partial \beta_\theta}{\partial r} \;;\; \tau_\theta = \frac{1}{R}\frac{\partial \beta_r}{\partial \theta} \tag{2.46}$$

$$\mu^o_r = \frac{\partial W}{\partial r} + \beta_r \;;\; \mu^o_\theta = \frac{1}{R}\frac{\partial W}{\partial \theta} + \beta_\theta$$

We substitute relations (2.46) first into the constitutive equations and then into equations (2.44), and obtain five differential equations which are defined in Appendix E-2.

2.11 Characteristic Equation

In the present theory, β_1 and β_2 which represent the rotation of tangents to the reference surface oriented along parametric lines α_1 and α_2, cannot be expressed in terms of U_i and W. Therefore, the five differential equations of motion cannot be reduced to 3 as in classical shell theory. In the case of cylindrical shells, we obtain five differential equations of motion as shown in A-2.2 to A-2.6 in Appendix A. Also listed in Appendix A are the three differential equations (A-2.7 to A-2.9) of Sanders' cylindrical shell theory.

The accuracy of the finite element method depends primarily on the number and size

of the finite element into which the structure is divided. Good accuracy can generally be obtained with a sufficiently large number of small elements. The optimum degree of approximation in the element stiffness and mass matrices will depend upon many factors, the most important perhaps being the choice of the displacement functions and the degree to which they satisfy the convergence criteria of the finite element method, here we do not mean numerical convergence but absolute convergence to the continuum.

The characteristic equations of vibration analysis of anisotropic laminated open circular cylindrical shells, formulated on the basis of the present theory, have been compared to that of Sanders' shell theory [Ref. 147]. Assuming the displacement functions for the dynamic analysis of anisotropic circular cylindrical shells to be as follows :

$$\begin{Bmatrix} U(x,\theta) \\ V(x,\theta) \\ W(x,\theta) \\ \beta_x(x,\theta) \\ \beta_\theta(x,\theta) \end{Bmatrix} = \sum_{i=1}^{10} \begin{bmatrix} Cos\bar{m}x & 0 & 0 & 0 & 0 \\ 0 & Sin\bar{m}x & 0 & 0 & 0 \\ 0 & 0 & Sin\bar{m}x & 0 & 0 \\ 0 & 0 & 0 & Cos\bar{m}x & 0 \\ 0 & 0 & 0 & 0 & Sin\bar{m}x \end{bmatrix} \begin{Bmatrix} u_i(\theta) \\ v_i(\theta) \\ w_i(\theta) \\ \beta_{x_i}(\theta) \\ \beta_{\theta_i}(\theta) \end{Bmatrix} = \sum_{i=1}^{10} [T_i] \begin{Bmatrix} A_i e^{\eta\theta} \\ B_i e^{\eta\theta} \\ C_i e^{\eta\theta} \\ D_i e^{\eta\theta} \\ E_i e^{\eta\theta} \end{Bmatrix} \tag{2.47}$$

where:

$$\bar{m} = \frac{m\pi}{L}$$

we substitute these definitions into the equations of motion for cylindrical shells (2.34). We then take into account that the non-trivial solution leads to a tenth order polynomial equation (2.48) (characteristic equation) due to five degrees of freedom per node,

instead of an 8th order equation (2.49) [Ref. 147, equation 10]:

$$f_{10}\eta^{10}+f_8\eta^8+f_6\eta^6+f_4\eta^4+f_2\eta^2+f_0=0. \tag{2.48}$$

where f_i (i = 0 to 10) are the coefficients of the determinant of the matrix *[H]* given in Appendix A. For the case of isotropic cylindrical shells based on classical shell theory, we obtain:

$$h_8\eta^8+h_6\eta^6+h_4\eta^4+h_2\eta^2+h_0=0. \tag{2.49}$$

where h_i (i= 0 to 8). The coefficients of the characteristic equation of cylindrical shells based on Sanders' shell theory, are given in [Ref. 147]. Each root of the characteristic equation (2.48) yields a solution to the equations of motion (2.34). The complete solution is obtained by finding the sum of all ten solutions independently with the constants A_i, B_i, C_i, D_i and E_i. The fundamental unknowns consist of the ten strain components, ten stress resultants and the five generalized displacements of plates or shells.

It is necessary to formulate ten boundary conditions for the finite elements, the axial, tangential and radial displacements as well as the rotations will be specified for each node. The displacement functions for this theory are derived and mass and stiffness matrices of each element are obtained by exact analytical integration

The roots of the characteristic equation for equations (2.48,2.49) obtained by the computer program are given for isotropic and anisotropic materials. One such set of calculation is shown in table (2.1), where the computed values based on Sanders' theory, made by authors of reference [139], were compared with those from other theories, given in ref.[139]. Tables (2.2,2.3) show the characteristic equation values of equation (2.49), ref. [147], and those of equation (2.48) obtained by the present theory.

A cross-ply layered (0°/90°/90°/0°) cylindrical shell with the following material properties were used as a anisotropic material example. All layers are assumed to have the same geometric and material parameters and the individual layer is assumed to be orthotropic.

$$E_1=25\ E_2\ ;\ G_{23}=0.2\ E_2\ ;\ G_{13}=G_{12}=0.5\ E_2\ ;\ \nu_{12}=0.25\ ;\ \rho=1$$

2.12 Discussion and Conclusion

General equations of multi-layered laminated anisotropic shells were developed by taking into account the shear deformation and rotatory inertia effects as well as the initial curvature. We believe that these effects will be more pronounced on the dynamic behaviour of anisotropic shells than on the isotropic materials. The derivation was from geometrically linear theory for small elastic strains and from strains expressed in orthogonal curvilinear coordinates for general shells. The virtual work principle was applied in order to derive the equilibrium equations. The work of several researchers on this particular subject has been reviewed and summarized.

The theory used yields five coupled linear second-order differential equations with

constant coefficients, instead of 3 equations, as in the case of other theories. The reason for this is that transverse shear strains do not vanish in the present theory and, therefore, the β_i cannot be expressed in terms of displacement components. This theory leads to no strain during rigid body motions.

A paper currently under preparation will deal with the static and dynamic analysis of open and closed non-uniform anisotropic laminated circular cylindrical shells with arbitrary boundary conditions. The effects of transverse shear deformations on the vibration characteristics of cylindrical shells of different geometrical (R/t, L/R and L/t) and material (isotropic, symmetric and anti-symmetric cross-ply laminated shells) parameters, as well as axial and circumferential wave number (m, n), are handled through several numerical examples with reasonable agreement with other theories. The computational method used is a combination of hybrid finite element analysis based on the method of reference [139] and refined shell theory. The displacement functions are obtained using the new shell equations developed in this paper.

The first preliminary results indicate that the presence of the transverse shear deformation effects is very significant and tends to reduce the frequency parameters specially for laminated anisotropic shells. It has been suggested that the reason for the difference is a change in shear angle from layer to layer and the insensitivity of the CST (classical shell theory) to this change.

Further work is under way to apply this theory to the dynamic analysis of open and closed anisotropic cylindrical shells filled with or subjected to a flowing fluid.

2.13 Appendix A-2

This appendix contains the constitutive equations and equations of motion for thin anisotropic plates and shells which were referred to this paper. The Appendix is divided into five parts, covering respectively cylindrical shells, rectangular plates, spherical and conical shells, and circular plates.

$$\begin{Bmatrix} N_{11} \\ N_{12} \\ Q_{11} \\ N_{22} \\ N_{21} \\ Q_{22} \\ M_{11} \\ M_{12} \\ M_{22} \\ M_{21} \end{Bmatrix} = \begin{bmatrix} G_{11} & G_{16} & 0 & A_{12} & A_{16} & 0 & H_{11} & H_{16} & B_{12} & B_{16} \\ G_{61} & G_{66} & 0 & A_{62} & A_{66} & 0 & H_{61} & H_{66} & B_{62} & B_{66} \\ 0 & 0 & AA_{55} & 0 & 0 & A_{45} & 0 & 0 & 0 & 0 \\ A_{21} & A_{26} & 0 & GG_{22} & GG_{26} & 0 & B_{21} & B_{26} & HH_{22} & HH_{26} \\ A_{61} & A_{66} & 0 & GG_{62} & GG_{66} & 0 & B_{61} & B_{66} & HH_{62} & HH_{66} \\ 0 & 0 & A_{45} & 0 & 0 & BB_{44} & 0 & 0 & 0 & 0 \\ I_{11} & I_{16} & 0 & B_{12} & B_{16} & 0 & J_{11} & J_{16} & D_{12} & D_{16} \\ I_{61} & I_{66} & 0 & B_{62} & B_{66} & 0 & J_{61} & J_{66} & D_{62} & D_{66} \\ B_{21} & B_{26} & 0 & II_{22} & II_{26} & 0 & D_{21} & D_{26} & JJ_{22} & JJ_{26} \\ B_{61} & B_{66} & 0 & II_{62} & II_{66} & 0 & D_{61} & D_{66} & JJ_{62} & JJ_{66} \end{bmatrix} \begin{Bmatrix} \varepsilon^{o}_{1} \\ \gamma^{o}_{1} \\ \mu^{o}_{1} \\ \varepsilon^{o}_{2} \\ \gamma^{o}_{2} \\ \mu^{o}_{2} \\ \kappa_{1} \\ \tau_{1} \\ \kappa_{2} \\ \tau_{2} \end{Bmatrix} \qquad \text{(A-2.1)}$$

The P_{ij}'s elements (A_{ij}, B_{ij}, D_{ij}, G_{ij}, GG_{ij}, H_{ij}, HH_{ij}, I_{ij}, II_{ij}, J_{ij} and JJ_{ij}) have been defined by equations (2.19-2.21) and (25) .

Cylindrical Shells

The equations of motion are defined by the following equations:

$$\begin{aligned} &L_1(U,V,W,\beta_x,\beta_\theta,\overline{P_{ij}}) = \\ &P_{11}\frac{\partial^2 U_x}{\partial x^2} + \frac{1}{R}(P_{15}+P_{51})\frac{\partial^2 U_x}{\partial x \partial \theta} + \frac{P_{55}}{R^2}\frac{\partial^2 U_x}{\partial \theta^2} - I_1\frac{\partial^2 U_x}{\partial t^2} + P_{12}\frac{\partial^2 U_\theta}{\partial x^2} + \frac{1}{R}(P_{14}+P_{52})\frac{\partial^2 U_\theta}{\partial x \partial \theta} + \frac{P_{54}}{R^2}\frac{\partial^2 U_\theta}{\partial \theta^2} + \frac{P_{14}}{R}\frac{\partial W}{\partial x} + \frac{P_{54}}{R^2}\frac{\partial W}{\partial \theta} + \\ &P_{17}\frac{\partial^2 \beta_x}{\partial x^2} + \frac{1}{R}(P_{1,10}+P_{57})\frac{\partial^2 \beta_x}{\partial x \partial \theta} + P_{5,10}\frac{\partial^2 \beta_x}{\partial \theta^2} - I_2\frac{\partial^2 \beta_x}{\partial t^2} + P_{18}\frac{\partial^2 \beta_\theta}{\partial x^2} + \frac{1}{R}(P_{19}+P_{58})\frac{\partial^2 \beta_\theta}{\partial x \partial \theta} + \frac{P_{59}}{R^2}\frac{\partial^2 \beta_\theta}{\partial \theta^2} \end{aligned} \qquad \text{(A-2.2)}$$

$$
\begin{gathered}
L_2(U,V,W,\beta_x,\beta_\theta,\overline{P_{ij}})= \\
P_{21}\frac{\partial^2 U_x}{\partial x^2}+\frac{1}{R}(P_{25}+P_{41})\frac{\partial^2 U_x}{\partial x\partial\theta}+\frac{P_{45}}{R^2}\frac{\partial^2 U_x}{\partial\theta^2}+P_{22}\frac{\partial^2 U_\theta}{\partial x^2}+\frac{1}{R}(P_{24}+P_{42})\frac{\partial^2 U_\theta}{\partial x\partial\theta}+\frac{P_{44}}{R^2}\frac{\partial^2 U_\theta}{\partial\theta^2}-\frac{P_{66}}{R^2}U_\theta-I_1\frac{\partial^2 U_\theta}{\partial t^2}+ \\
+\frac{1}{R}(P_{24}+P_{63})\frac{\partial W}{\partial x}+\frac{1}{R^2}(P_{44}+P_{66})\frac{\partial W}{\partial\theta}+ \\
+P_{27}\frac{\partial^2\beta_x}{\partial x^2}+\frac{1}{R}(P_{2,10}+P_{47})\frac{\partial^2\beta_x}{\partial x\partial\theta}+\frac{P_{4,10}}{R^2}\frac{\partial^2\beta_x}{\partial\theta^2}+\frac{P_{36}}{R}\beta_x+P_{28}\frac{\partial^2\beta_\theta}{\partial x^2}+\frac{1}{R}(P_{29}+P_{48})\frac{\partial^2\beta_\theta}{\partial x\partial\theta}+\frac{P_{49}}{R^2}\frac{\partial^2\beta_\theta}{\partial\theta^2}+\frac{P_{66}}{R}\beta_\theta-I_2\frac{\partial^2 U_\theta}{\partial t^2}
\end{gathered}
\tag{A-2.3}
$$

$$
\begin{gathered}
L_3(U,V,W,\beta_x,\beta_\theta,\overline{P_{ij}})= \\
-\frac{P_{41}}{R}\frac{\partial U_x}{\partial x}-\frac{P_{45}}{R^2}\frac{\partial U_x}{\partial\theta}-\frac{1}{R}(P_{36}+P_{42})\frac{\partial U_\theta}{\partial x}-\frac{1}{R^2}(P_{66}+P_{44})\frac{\partial U_\theta}{\partial\theta}+P_{33}\frac{\partial^2 W}{\partial x^2}+\frac{1}{R}(P_{36}+P_{63})\frac{\partial^2 W}{\partial x\partial\theta}+\frac{P_{66}}{R^2}\frac{\partial^2 W}{\partial\theta^2}-\frac{P_{44}}{R^2}W-I_1\frac{\partial^2 W}{\partial t^2}+ \\
+(P_{33}-\frac{P_{47}}{R})\frac{\partial\beta_x}{\partial x}+\frac{1}{R}(P_{63}-\frac{P_{4,10}}{R})\frac{\partial\beta_x}{\partial\theta}++(P_{36}-\frac{P_{48}}{R})\frac{\partial\beta_\theta}{\partial x}+\frac{1}{R}(P_{66}-\frac{P_{49}}{R})\frac{\partial\beta_\theta}{\partial\theta}
\end{gathered}
\tag{A-2.4}
$$

$$
\begin{gathered}
L_4(U,V,W,\beta_x,\beta_\theta,\overline{P_{ij}})= \\
P_{71}\frac{\partial^2 U_x}{\partial x^2}+\frac{1}{R}(P_{75}+P_{10,1})\frac{\partial^2 U_x}{\partial x\partial\theta}-I_2\frac{\partial^2 U_x}{\partial t^2}+\frac{P_{10,5}}{R^2}\frac{\partial^2 U_x}{\partial\theta^2}-I_2\frac{\partial^2 U_x}{\partial t^2}+P_{72}\frac{\partial^2 U_\theta}{\partial x^2}+\frac{1}{R}(P_{74}+P_{10,2})\frac{\partial^2 U_\theta}{\partial x\partial\theta}+\frac{P_{10,4}}{R^2}\frac{\partial^2 U_\theta}{\partial\theta^2}+\frac{P_{36}}{R}U \\
+(\frac{P_{74}}{R}-P_{33})\frac{\partial W}{\partial x}+\frac{1}{R}(\frac{P_{10,4}}{R}-P_{36})\frac{\partial W}{\partial\theta}+ \\
+P_{77}\frac{\partial^2\beta_x}{\partial x^2}+\frac{1}{R}(P_{7,10}+P_{10,7})\frac{\partial^2\beta_x}{\partial x\partial\theta}+\frac{P_{10,10}}{R^2}\frac{\partial^2\beta_x}{\partial\theta^2}-P_{33}\beta_x-I_3\frac{\partial^2\beta_x}{\partial t^2}+P_{78}\frac{\partial^2\beta_\theta}{\partial x^2}+\frac{1}{R}(P_{79}+P_{10,8})\frac{\partial^2\beta_\theta}{\partial x\partial 0}+\frac{P_{10,9}}{R^2}\frac{\partial^2\beta_\theta}{\partial\theta^2}-P_{36}\beta_\theta
\end{gathered}
\tag{A-2.5}
$$

$$
\begin{gathered}
L_5(U,V,W,\beta_x,\beta_\theta,\overline{P_{ij}})= \\
P_{81}\frac{\partial^2 U_x}{\partial x^2}+\frac{1}{R}(P_{91}+P_{85})\frac{\partial^2 U_x}{\partial x\partial\theta}+\frac{P_{95}}{R^2}\frac{\partial^2 U_x}{\partial\theta^2}+P_{82}\frac{\partial^2 U_\theta}{\partial x^2}+\frac{1}{R}(P_{84}+P_{92})\frac{\partial^2 U_\theta}{\partial x\partial\theta}+\frac{P_{94}}{R^2}\frac{\partial^2 U_\theta}{\partial\theta^2}+\frac{P_{66}}{R}U_\theta-I_2\frac{\partial^2 U_\theta}{\partial t^2}+ \\
+(\frac{P_{84}}{R}-P_{63})\frac{\partial W}{\partial x}+\frac{1}{R}(\frac{P_{94}}{R}-P_{66})\frac{\partial W}{\partial\theta}+ \\
+P_{87}\frac{\partial^2\beta_x}{\partial x^2}+\frac{1}{R}(P_{8,10}+P_{97})\frac{\partial^2\beta_x}{\partial x\partial\theta}+\frac{P_{9,10}}{R^2}\frac{\partial^2\beta_x}{\partial\theta^2}-P_{63}\beta_x+P_{88}\frac{\partial^2\beta_\theta}{\partial x^2}+\frac{1}{R}(P_{89}+P_{98})\frac{\partial^2\beta_\theta}{\partial x\partial\theta}+\frac{P_{99}}{R^2}\frac{\partial^2\beta_\theta}{\partial\theta^2}-P_{66}\beta_\theta-I_3\frac{\partial^2\beta_\theta}{\partial t^2}
\end{gathered}
\tag{A-2.6}
$$

The equations of motion for a thin cylindrical shell (Hybrid finite element method based on Sanders' shell theory) are defined as below [147]:

$$L_1(U,V,W,P_\eta)=P_{11}\frac{\partial^2 U}{\partial x^2}+\frac{P_{12}}{R}\left(\frac{\partial^2 V}{\partial x\partial\theta}+\frac{\partial W}{\partial x}\right)+P_{14}\frac{\partial^3 W}{\partial x^3}+$$
$$\frac{P_{15}}{R^2}\left(\frac{\partial^3 W}{\partial x\partial\theta^2}+\frac{\partial^2 V}{\partial x\partial\theta}\right)+\left(\frac{P_{33}}{R}-\frac{P_{63}}{2R^2}\right)\left(\frac{\partial^2 V}{\partial x\partial\theta}+\frac{1}{R}\frac{\partial^2 U}{\partial\theta^2}\right)+\left(\frac{P_{36}}{R^2}-\frac{P_{66}}{2R^3}\right)\left(-\frac{2\partial^3 W}{\partial x\partial\theta^2}+\frac{3}{2}\frac{\partial^2 V}{\partial x\partial\theta}-\frac{1}{2R}\frac{\partial^2 U}{\partial\theta^2}\right) \tag{A-2.7}$$

$$L_2(U,V,W,P_\eta)=\left(\frac{P_{21}}{R}+\frac{P_{51}}{R^2}\right)\left(\frac{\partial^2 U}{\partial x\partial\theta}\right)+\frac{1}{R}\left(\frac{P_{22}}{R}+\frac{P_{52}}{R^2}\right)\left(\frac{\partial^2 V}{\partial\theta^2}+\frac{\partial W}{\partial\theta}\right)-\left(\frac{P_{24}}{R}+\frac{P_{54}}{R^2}\right)\left(\frac{\partial^3 W}{\partial x^2\partial\theta}\right)+\frac{1}{R^2}\left(\frac{P_{25}}{R}+\frac{P_{55}}{R^2}\right)$$
$$\left(-\frac{\partial^3 w}{\partial\theta^3}+\frac{\partial^2 V}{\partial\theta^2}\right)+\left(P_{33}+\frac{3P_{63}}{2R}\right)\left(\frac{\partial^2 V}{\partial x^2}+\frac{\partial^2 U}{R\partial x\partial\theta}\right)+\frac{1}{R}\left(P_{36}+\frac{3P_{66}}{2R}\right)\left(-2\frac{\partial^3 W}{\partial x^2\partial\theta}+\frac{3}{2}\frac{\partial^2 V}{\partial x^2}-\frac{\partial^2 U}{2R\partial x\partial\theta}\right) \tag{A-2.8}$$

$$L_3(U,V,W,P_\eta)=P_{41}\frac{\partial^3 U}{\partial x^3}+\frac{P_{42}}{R}\left(\frac{\partial^3 V}{\partial x^2\partial\theta}+\frac{\partial^2 W}{\partial x^2}\right)-P_{44}\frac{\partial^4 W}{\partial x^4}+\frac{P_{45}}{R^2}\left(-\frac{\partial^4 W}{\partial x^2\partial\theta^2}+\frac{\partial^3}{\partial x^2\partial\theta}\right)+\frac{2P_{63}}{R}\left(\frac{\partial^3 U}{R\partial x\partial\theta^2}+\frac{\partial^3 V}{\partial x^2\partial\theta}\right)+\left(\frac{2P_{66}}{R^2}\right)$$
$$\left(-2\frac{\partial^4 W}{\partial x^2\partial\theta^2}+\frac{3}{2}\frac{\partial^3 V}{\partial x^2\partial\theta}-\frac{\partial^3 U}{2R\partial x\partial\theta^2}\right)+\frac{P_{51}}{R^2}\frac{\partial^3 U}{\partial x\partial\theta^2}+\frac{P_{52}}{R^3}\left(\frac{\partial^3 V}{\partial\theta^3}\frac{\partial^2 W}{\partial\theta^2}\right)+$$
$$\frac{P_{55}}{R^4}\left(-\frac{\partial^4 W}{\partial\theta^4}+\frac{\partial^3 V}{\partial\theta^3}\right)-\frac{P_{21}}{R}\frac{\partial U}{\partial x}-\frac{P_{54}}{R^2}\frac{\partial^4 W}{\partial x^2\partial\theta^2}-\frac{P_{22}}{R^2}\left(\frac{\partial V}{\partial\theta}+W\right)+\frac{P_{24}}{R}\frac{\partial^2 W}{\partial\theta^2}-\frac{P_{25}}{R^3}\left(-\frac{\partial^2 W}{\partial\theta^2}+\frac{\partial V}{\partial\theta}\right) \tag{A-2.9}$$

The P_{ij}'s elements are defined (only for one lamina) [147]:

$$P_{11}=C_{11}\quad;P_{12}=C_{12}\quad;P_{21}=P_{12}\quad;P_{22}=C_{22}\quad;P_{33}=C_{33}$$
$$P_{44}=D_{11}\quad;P_{45}=D_{12}\quad;P_{54}=P_{45}\quad;P_{55}=D_{22}\quad;P_{66}=D_{33}$$

where

$$C_{11}=E_x t/\Delta\quad C_{22}=E_\theta t/\Delta\quad C_{12}=\nu_x E_\theta t/\Delta\quad C_{33}=G_{x\theta}t \tag{A-2.10}$$
$$D_{11}=E_x t^3/12\Delta\quad D_{22}=E_\theta t^3/12\Delta\quad D_{12}=\nu_x E_\theta t^3/12\Delta\quad D_{33}=G_{x\theta}t^3/12$$

where

$$\Delta=(1-\nu_x\nu_\theta)$$

Matrix [H]:

$$\begin{bmatrix} H_{11} & H_{12} & H_{13} & H_{14} & H_{15} \\ H_{21} & H_{22} & H_{23} & H_{24} & H_{25} \\ H_{31} & H_{32} & H_{33} & H_{34} & H_{35} \\ H_{41} & H_{42} & H_{43} & H_{44} & H_{45} \\ H_{51} & H_{52} & H_{53} & H_{54} & H_{55} \end{bmatrix} \begin{Bmatrix} A \\ B \\ C \\ D \\ E \end{Bmatrix} = \begin{Bmatrix} 0 \\ 0 \\ 0 \\ 0 \\ 0 \end{Bmatrix}$$

where:

$$H_{11} = P_{11}(-\overline{m}^2) - [\frac{P_{5,10} + P_{10,5}}{2R^3} - \frac{P_{10,10}}{4R^4} - \frac{P_{55}}{R^2}]\eta^2 - [\frac{P_{15} + P_{51}}{R} - \frac{P_{10,1} + P_{1,10}}{2R^2}](\overline{m}\eta)$$

$$H_{12} = (P_{12} + \frac{P_{18}}{2R})(-\overline{m}^2) + [\frac{P_{14} + P_{52}}{R} + \frac{P_{58} - P_{10,2}}{2R^2} - \frac{P_{10,8}}{4R^3}]\overline{m}\eta + (\frac{P_{54}}{R^2} - \frac{P_{10,4}}{2R^3})\eta^2$$

$$H_{13} = \frac{P_{14}}{R}\overline{m} + (\frac{P_{54}}{R^2} - \frac{P_{10,4}}{2R^3})\eta$$

$$H_{14} = P_{17}(-\overline{m}^2) - [\frac{P_{1,10} + P_{57}}{R} - \frac{P_{10,7}}{2R^2}]\overline{m}\eta - (\frac{P_{10,10}}{2R^3} - \frac{P_{5,10}}{R^2})\eta^2$$

$$H_{15} = P_{18}(-\overline{m}^2) + [\frac{P_{19} + P_{58}}{R} - \frac{P_{10,8}}{2R^2}]\overline{m}\eta - (\frac{P_{10,9}}{2R^3} - \frac{P_{59}}{R^2})\eta^2$$

$$H_{22} = [P_{22} + \frac{P_{28} + P_{82}}{2R} + \frac{P_{88}}{4R^2}](-\overline{m}^2) + [\frac{P_{24} + P_{42}}{R} + \frac{P_{48} + P_{84}}{2R^2}]\overline{m}\eta - \frac{1}{R^2}(P_{66} - P_{44}\eta^2)$$

$$H_{23} = (\frac{P_{24} + P_{63}}{R} + \frac{P_{84}}{2R^2})\overline{m} + (P_{44} + P_{66})\frac{\eta}{R^2} \qquad \text{(A-2.11)}$$

$$H_{24} = (P_{27} + \frac{P_{87}}{2R})(-\overline{m}^2) - [\frac{P_{2,10} + P_{47}}{R} + \frac{P_{8,10}}{2R^2}]\overline{m}\eta + \frac{\eta^2}{R^2}P_{4,10} + \frac{P_{63}}{R}$$

$$H_{25} = (P_{28} + \frac{P_{88}}{2R})(-\overline{m}^2) + (\frac{P_{29} + P_{48}}{R} + \frac{P_{89}}{2R^2})\overline{m}\eta + \frac{P_{49}}{R^2}\eta^2 + \frac{P_{66}}{R}$$

$$H_{33} = P_{33}(-\overline{m}^2) + (\frac{P_{36} + P_{63}}{R})\overline{m}\eta + \frac{P_{66}}{R^2}\eta^2 - \frac{P_{44}}{R^2}$$

$$H_{34} = (\frac{P_{47}}{R} - P_{33})(\overline{m}) + (\frac{P_{63}}{R} - \frac{P_{4,10}}{R^2})\eta$$

$$H_{35} = (P_{36} - \frac{P_{48}}{R})(\overline{m}) + (P_{66} - \frac{P_{49}}{R})\frac{\eta}{R}$$

$$H_{44} = P_{77}(-\overline{m}^2) - (P_{7,10} + P_{10,7})\frac{\overline{m}\eta}{R} + \frac{P_{10,10}}{R^2}\eta^2 - P_{33}$$

$$H_{45} = P_{78}(-\overline{m}^2) + (P_{79} + P_{10,8})\frac{\overline{m}\eta}{R} + P_{10,9}\frac{\eta^2}{R^2} - P_{36}$$

$$H_{55} = P_{88}(-\overline{m}^2) + (P_{98} + P_{89})\frac{\overline{m}\eta}{R} + \frac{P_{99}}{R^2}\eta^2 - P_{66}$$

where

$$\overline{m} = \frac{m\pi}{L}$$

2.14 Appendix B-2

Rectangular Plates The L_i's equations are given below:

$$L_1(U,V,W,\beta_x,\beta_y,\overline{P_{ij}})=$$
$$P_{11}\frac{\partial^2 U_x}{\partial x^2}+(P_{15}+P_{51})\frac{\partial^2 U_x}{\partial x\partial y}+P_{55}\frac{\partial^2 U_x}{\partial y^2}-I_1\frac{\partial^2 U_x}{\partial t^2}+P_{12}\frac{\partial^2 U_y}{\partial x^2}+(P_{14}+P_{52})\frac{\partial^2 U_y}{\partial x\partial y}+P_{54}\frac{\partial^2 U_y}{\partial y^2}+$$
$$P_{17}\frac{\partial^2 \beta_x}{\partial x^2}+(P_{1,10}+P_{57})\frac{\partial^2 \beta_x}{\partial x\partial y}+P_{5,10}\frac{\partial^2 \beta_x}{\partial y^2}-I_2\frac{\partial^2 \beta_x}{\partial t^2}+P_{18}\frac{\partial^2 \beta_y}{\partial x^2}+(P_{19}+P_{58})\frac{\partial^2 \beta_y}{\partial x\partial y}+P_{59}\frac{\partial^2 \beta_y}{\partial y^2} \tag{B-2.1}$$

$$L_2(U,V,W,\beta_x,\beta_y,\overline{P_{ij}})=$$
$$P_{21}\frac{\partial^2 U_x}{\partial x^2}+(P_{25}+P_{41})\frac{\partial^2 U_x}{\partial x\partial y}+P_{45}\frac{\partial^2 U_x}{\partial y^2}+P_{22}\frac{\partial^2 U_y}{\partial x^2}+(P_{24}+P_{42})\frac{\partial^2 U_y}{\partial x\partial y}+P_{44}\frac{\partial^2 U_y}{\partial y^2}-I_1\frac{\partial^2 U_y}{\partial t^2}+$$
$$+P_{27}\frac{\partial^2 \beta_x}{\partial x^2}+(P_{2,10}+P_{47})\frac{\partial^2 \beta_x}{\partial x\partial y}+P_{4,10}\frac{\partial^2 \beta_x}{\partial y^2}+P_{28}\frac{\partial^2 \beta_y}{\partial x^2}+(P_{29}+P_{48})\frac{\partial^2 \beta_y}{\partial x\partial y}+P_{49}\frac{\partial^2 \beta_y}{\partial y^2}-I_2\frac{\partial^2 \beta_y}{\partial t^2} \tag{B-2.2}$$

$$L_3(U,V,W,\beta_x,\beta_y,\overline{P_{ij}})=$$
$$P_{33}\frac{\partial^2 W}{\partial x^2}+(P_{36}+P_{63})\frac{\partial^2 W}{\partial x\partial y}+P_{66}\frac{\partial^2 W}{\partial y^2}-I_1\frac{\partial^2 W}{\partial t^2}+P_{33}\frac{\partial \beta_x}{\partial x}+P_{63}\frac{\partial \beta_x}{\partial y}+P_{36}\frac{\partial \beta_y}{\partial x}+P_{66}\frac{\partial \beta_y}{\partial y} \tag{B-2.3}$$

$$L_4(U,V,W,\beta_x,\beta_y,\overline{P_{ij}})=$$
$$P_{71}\frac{\partial^2 U_x}{\partial x^2}+(P_{75}+P_{10,1})\frac{\partial^2 U_x}{\partial x\partial y}+P_{10,5}\frac{\partial^2 U_x}{\partial y^2}-I_2\frac{\partial^2 U_x}{\partial t^2}+P_{72}\frac{\partial^2 U_y}{\partial x^2}+(P_{74}+P_{10,2})\frac{\partial^2 U_y}{\partial x\partial y}+P_{10,4}\frac{\partial^2 U_y}{\partial y^2}+(-)P_{33}\frac{\partial W}{\partial x}-P_{36}\frac{\partial w}{\partial y}+$$
$$P_{77}\frac{\partial^2 \beta_x}{\partial x^2}+(P_{7,10}+P_{10,7})\frac{\partial^2 \beta_x}{\partial x\partial y}+P_{10,10}\frac{\partial^2 \beta_x}{\partial y^2}-P_{33}\beta_x-I_3\frac{\partial^2 \beta_x}{\partial t^2}+P_{78}\frac{\partial^2 \beta_y}{\partial x^2}+(P_{79}+P_{10,8})\frac{\partial^2 \beta_y}{\partial x\partial y}+P_{10,9}\frac{\partial^2 \beta_y}{\partial y^2}-P_{36}\beta_y \tag{B-2.4}$$

$$L_5(U,V,W,\beta_x,\beta_y,\overline{P_{ij}})=$$
$$P_{81}\frac{\partial^2 U_x}{\partial x^2}+(P_{85}+P_{91})\frac{\partial^2 U_x}{\partial x\partial y}+P_{95}\frac{\partial^2 U_x}{\partial y^2}+P_{82}\frac{\partial^2 U_y}{\partial x^2}+(P_{84}+P_{92})\frac{\partial^2 U_y}{\partial x\partial y}+P_{94}\frac{\partial^2 U_y}{\partial y^2}-I_2\frac{\partial^2 U_y}{\partial t^2}+(-)P_{63}\frac{\partial W}{\partial x}-P_{66}\frac{\partial W}{\partial y}+$$
$$P_{87}\frac{\partial^2 \beta_x}{\partial x^2}+(P_{8,10}+P_{97})\frac{\partial^2 \beta_x}{\partial x\partial y}+P_{9,10}\frac{\partial^2 \beta_x}{\partial y^2}-P_{63}\beta_x+P_{88}\frac{\partial^2 \beta_y}{\partial x^2}+(P_{89}+P_{98})\frac{\partial^2 \beta_y}{\partial x\partial y}+P_{99}\frac{\partial^2 \beta_y}{\partial y^2}-P_{66}\beta_y-I_3\frac{\partial^2 \beta_y}{\partial t^2} \tag{B-2.5}$$

2.15 Appendix C-2

Spherical Shells

The L_i's equations (equations of motion) are given below:

$$L_1(U_\varphi, U_\theta, W, \beta_\varphi, \beta_\theta, \overline{P}_{ij}) =$$

$$\frac{P_{11}}{r^2}\frac{\partial^2 U_\varphi}{\partial\varphi^2} + \frac{(P_{15}+P_{51})}{r^2\sin\varphi}\frac{\partial^2 U_\varphi}{\partial\varphi\partial\theta} + \frac{P_{55}}{r^2\sin^2\varphi}\frac{\partial^2 U_\varphi}{\partial\theta^2} +$$

$$+\frac{P_{11}}{r^2}cotg\varphi\frac{\partial U_\varphi}{\partial\varphi} + \frac{P_{54}}{r^2}\frac{\cos\varphi}{\sin^2\varphi}\frac{\partial U_\varphi}{\partial\theta} - \frac{1}{r^2}(P_{14}+P_{33}+P_{44}cotg^2\varphi)U_\varphi - I_1\frac{\partial^2 U_\varphi}{\partial t^2} +$$

$$+\frac{P_{12}}{r^2}\frac{\partial^2 U_\theta}{\partial\varphi^2} + \frac{(P_{52}+P_{14})}{r^2\sin\varphi}\frac{\partial^2 U_\theta}{\partial\varphi\partial\theta} + \frac{P_{54}}{r^2\sin^2\varphi}\frac{\partial^2 U_\theta}{\partial\theta^2} +$$

$$+\frac{(P_{12}-P_{15}-P_{42})}{r^2}cotg\varphi\frac{\partial U_\theta}{\partial\varphi} - \frac{(P_{55}+P_{44})}{r^2}\frac{\cos\varphi}{\sin^2\varphi}\frac{\partial U_\theta}{\partial\theta} +$$

$$+\frac{1}{r^2}((P_{15}+P_{45})cotg^2\varphi - P_{36})U_\theta + \frac{(P_{11}+P_{14}+P_{33})}{r^2}\frac{\partial W}{\partial\varphi} + \frac{(P_{51}+P_{54}+P_{36})}{r^2\sin\varphi}\frac{\partial W}{\partial\theta} + \qquad \text{(C-2.1)}$$

$$+\left(\frac{P_{11}}{\sin\varphi} - P_{44}\right)\frac{cotg\varphi}{r^2}W + \frac{P_{17}}{r^2}\frac{\partial^2\beta\varphi}{\partial\varphi^2} + \frac{1}{r^2\sin\varphi}(P_{1,10}+P_{57})\frac{\partial^2\beta_\varphi}{\partial\varphi\partial\theta} +$$

$$+\frac{P_{5,10}}{r^2\sin^2\varphi}\frac{\partial^2\beta_\varphi}{\partial\theta^2} + \frac{(P_{17}+P_{19}-P_{47})}{r^2}cotg\varphi\frac{\partial\beta_\varphi}{\partial\varphi} +$$

$$+\frac{(P_{59}-P_{4,10})}{r^2}\frac{\cos\varphi}{\sin^2\varphi}\frac{\partial\beta_\varphi}{\partial\theta} - \left(\frac{1}{r^2}(P_{19}+P_{49})cotg^2\varphi - \frac{P_{33}}{r}\right)\beta_\varphi - I_2\frac{\partial^2\beta_\varphi}{\partial t^2} +$$

$$+\frac{P_{18}}{r^2}\frac{\partial^2\beta_\theta}{\partial\varphi^2} + \frac{(P_{19}+P_{58})}{r^2\sin\varphi}\frac{\partial^2\beta_\theta}{\partial\varphi\partial\theta} + \frac{P_{59}}{r^2\sin^2\varphi}\frac{\partial^2\beta_\theta}{\partial\theta^2} +$$

$$+\frac{(P_{18}-P_{48}-P_{1,10})}{r^2}cotg\varphi\frac{\partial\beta_\theta}{\partial\varphi} - \frac{(P_{49}+P_{5,10})}{r^2}\frac{\cos\varphi}{\sin^2\varphi}\frac{\partial\beta_\theta}{\partial\theta} + \frac{1}{r^2}(rP_{36}+(P_{1,10}+P_{4,10}cotg^2\varphi))\beta_\theta$$

$$L_2(U_\varphi, U_\theta, W, \beta_\varphi, \beta_\theta, \overline{P_{ij}}) =$$

$$\frac{P_{21}}{r^2}\frac{\partial^2 U_\varphi}{\partial\varphi^2} + \frac{(P_{41}+P_{25})}{r^2\sin\varphi}\frac{\partial^2 U_\varphi}{\partial\varphi\partial\theta} + \frac{p_{45}}{r^2\sin^2\varphi}\frac{\partial^2 U_\varphi}{\partial\theta^2} + \frac{(P_{51}+P_{24}+P_{21})}{r^2}cotg\varphi\frac{\partial U_\varphi}{\partial\varphi} +$$

$$+\frac{(P_{44}+P_{55})\cos\varphi}{r^2\sin^2\varphi}\frac{\partial U_\varphi}{\partial\theta} + \frac{1}{r^2}(P_{54}cotg^2\varphi - P_{24} - P_{63})U_\varphi +$$

$$\frac{P_{22}}{r^2}\frac{\partial^2 U_\theta}{\partial\varphi^2} + \frac{(P_{42}+P_{24})}{r^2\sin\varphi}\frac{\partial^2 U_\theta}{\partial\varphi\partial\theta} + \frac{p_{44}}{r^2\sin^2\varphi}\frac{\partial^2 U_\theta}{\partial\theta^2} + \frac{P_{22}}{r^2}cotg\varphi\frac{\partial U_\theta}{\partial\varphi} -$$

$$-\frac{P_{54}\cos\varphi}{r^2\sin^2\varphi}\frac{\partial U_\theta}{\partial\theta} + \frac{1}{r^2}(P_{25} - P_{55}cotg^2\varphi - P_{66})U_\theta - I_1\frac{\partial^2 U_\theta}{\partial t^2} +$$

$$\frac{(P_{21}+P_{24}+P_{63})}{r^2}\frac{\partial W}{\partial\varphi} + \frac{(P_{41}+P_{44}+P_{66})}{r^2\sin\varphi}\frac{\partial W}{\partial\theta} + \frac{1}{r^2}(p_{51}+P_{54}+P_{21}+P_{24})cotg\varphi W + \tag{C-2.2}$$

$$\frac{P_{27}}{r^2}\frac{\partial^2\beta_\varphi}{\partial\varphi^2} + \frac{(P_{47}+P_{2,10})}{r^2\sin\varphi}\frac{\partial^2\beta_\varphi}{\partial\varphi\partial\theta} + \frac{p_{4,10}}{r^2\sin^2\varphi}\frac{\partial^2\beta_\varphi}{\partial\theta^2} + \frac{(P_{57}+P_{29}+P_{27})}{r^2}cotg\varphi\frac{\partial\beta_\varphi}{\partial\varphi} +$$

$$+\frac{(P_{49}+P_{5,10})\cos\varphi}{r^2\sin^2\varphi}\frac{\partial\beta_\varphi}{\partial\theta} + [\frac{1}{r^2}(P_{59}cotg^2\varphi - P_{29}) + \frac{P_{63}}{r}]\beta_\varphi +$$

$$\frac{P_{28}}{r^2}\frac{\partial^2\beta_\theta}{\partial\varphi^2} + \frac{(P_{48}+P_{29})}{r^2\sin\varphi}\frac{\partial^2\beta_\theta}{\partial\varphi\partial\theta} + \frac{p_{49}}{r^2\sin^2\varphi}\frac{\partial^2\beta_\theta}{\partial\theta^2} + \frac{(P_{58}+P_{28}-P_{2,10})}{r^2}cotg\varphi\frac{\partial\beta_\theta}{\partial\varphi} +$$

$$+\frac{(P_{59}-P_{4,10})\cos\varphi}{r^2\sin^2\varphi}\frac{\partial\beta_\theta}{\partial\theta} + \frac{1}{r^2}(rP_{66}+P_{2,10}-P_{5,10}cotg^2\varphi)\beta_\theta - I_2\frac{\partial^2 U_\theta}{\partial t^2}$$

$$L_3(U_\varphi, U_\theta, W, \beta_\varphi, \beta_\theta, \overline{P_{ij}}) =$$

$$-\frac{1}{r^2}(P_{33}+P_{11}+P_{41})\frac{\partial U_\varphi}{\partial\varphi} - \frac{1}{r^2\sin\varphi}(P_{63}+P_{15}+P_{45})\frac{\partial U_\varphi}{\partial\theta} -$$

$$-\frac{1}{r^2}(P_{33}+P_{14}+P_{44})cotg\varphi U_\varphi - \frac{1}{r^2}(P_{36}+P_{12}+P_{42})\frac{\partial U_\theta}{\partial\varphi} -$$

$$-\frac{1}{r^2\sin\varphi}(P_{66}+P_{14}+P_{44})\frac{\partial U_\theta}{\partial\theta} + \frac{1}{r^2}(P_{15}+P_{45}-P_{36})cotg\varphi U_\theta +$$

$$+\frac{P_{33}}{r^2}\frac{\partial^2 W}{\partial\varphi^2} + \frac{(P_{36}+P_{63})}{r^2\sin\varphi}\frac{\partial^2 W}{\partial\varphi\partial\theta} + \frac{P_{66}}{r^2\sin^2\varphi}\frac{\partial^2 W}{\partial\theta^2} + \qquad \text{(C-2.3)}$$

$$+\frac{P_{33}}{r^2}cotg\varphi\frac{\partial W}{\partial\varphi} - \frac{1}{r^2}(P_{11}+P_{14}+P_{41}+P_{44})W - I_1\frac{\partial^2 W}{\partial t^2} +$$

$$+\frac{1}{r}(P_{33}-\frac{1}{r}(P_{17}+P_{47}))\frac{\partial\beta_\varphi}{\partial\varphi} + \frac{1}{r\sin\varphi}(P_{63}-\frac{1}{r}(P_{1,10}+P_{4,10}))\frac{\partial\beta_\varphi}{\partial\theta} +$$

$$+\frac{1}{r^2}(rP_{33}-P_{19}-P_{49})cotg\varphi\beta_\varphi +$$

$$\frac{1}{r^2}(rP_{36}-P_{18}-P_{48})\frac{\partial\beta_\theta}{\partial\varphi} + \frac{1}{r^2\sin\varphi}(rP_{66}-P_{19}-P_{49})\frac{\partial\beta_\theta}{\partial\theta} + \frac{1}{r}[P_{36}+\frac{1}{r}(P_{1,10}+P_{4,10})]cotg\varphi\beta$$

$$L_4(U_\varphi, U_\theta, W, \beta_\varphi, \beta_\theta, \overline{P_{ij}}) =$$

$$\frac{P_{71}}{r^2}\frac{\partial^2 U_\varphi}{\partial\varphi^2} + \frac{1}{r^2\sin\varphi}(P_{75}+P_{10,1})\frac{\partial^2 U_\varphi}{\partial\varphi\partial\theta} + \frac{1}{r^2\sin^2\varphi}P_{10,5}\frac{\partial^2 U_\varphi}{\partial\theta^2} +$$

$$+\frac{1}{r^2}(P_{74}+P_{71}-P_{91})cotg\varphi\frac{\partial U_\varphi}{\partial\varphi} + \frac{(P_{10,4}-P_{95})}{r^2\sin^2\varphi}\cos\varphi\frac{\partial U_\varphi}{\partial\theta} +$$

$$+\frac{1}{r}(P_{33} - \frac{P_{74}}{r\sin^2\varphi} - \frac{P_{94}}{r}cotg^2\varphi)U_\varphi - I_2\frac{\partial^2 U_\varphi}{\partial t^2} +$$

$$\frac{P_{72}}{r^2}\frac{\partial^2 U_\theta}{\partial\varphi^2} + \frac{(P_{74}+P_{10,2})}{r^2\sin\varphi}\frac{\partial^2 U_\theta}{\partial\varphi\partial\theta} + \frac{P_{10,4}}{r^2\sin^2\varphi}\frac{\partial^2 U_\theta}{\partial\theta^2} +$$

$$+\frac{(P_{72}-P_{75}-P_{92})}{r^2}cotg\varphi\frac{\partial U_\theta}{\partial\varphi} - \frac{1}{r^2\sin^2\varphi}(P_{10,5}+P_{94})\cos\varphi\frac{\partial U_\theta}{\partial\theta} +$$

$$+\frac{1}{r^2}(rP_{36}+P_{75}+P_{95}cotg^2\varphi)U_\theta +$$

$$\frac{(P_{71}+P_{74}-rP_{33})}{r^2}\frac{\partial W}{\partial\varphi} + \frac{1}{r^2\sin\varphi}(P_{10,4}+P_{10,1}-rP_{36})\frac{\partial W}{\partial\theta} + \frac{1}{r^2}(P_{71}+P_{74}-P_{91}-P_{94})cotg\varphi W + \tag{C-2.4}$$

$$\frac{P_{77}}{r^2}\frac{\partial^2\beta_\varphi}{\partial\varphi^2} + \frac{1}{r^2\sin\varphi}(P_{10,7}+P_{7,10})\frac{\partial^2\beta_\varphi}{\partial\varphi\partial\theta} + \frac{1}{r^2\sin^2\varphi}P_{10,10}\frac{\partial^2\beta_\varphi}{\partial\theta^2} +$$

$$+\frac{1}{r^2}(P_{79}+P_{77}-P_{97})cotg\varphi\frac{\partial\beta_\varphi}{\partial\varphi} + \frac{1}{r^2\sin^2\varphi}(P_{10,9}-P_{9,10})\cos\varphi\frac{\partial\beta_\varphi}{\partial\theta} +$$

$$-\frac{1}{r^2}(P_{79}+r^2P_{33}+P_{99}cotg^2\varphi)\beta_\varphi - I_3\frac{\partial^2\beta_\varphi}{\partial t^2} +$$

$$\frac{P_{78}}{r^2}\frac{\partial^2\beta_\theta}{\partial\varphi^2} + \frac{1}{r^2\sin\varphi}(P_{79}+P_{10,8})\frac{\partial^2\beta_\theta}{\partial\varphi\partial\theta} + \frac{1}{r^2\sin^2\varphi}P_{10,9}\frac{\partial^2\beta_\theta}{\partial\theta^2} +$$

$$+\frac{1}{r^2}[P_{78}-(P_{98}+P_{7,10})]cotg\varphi\frac{\partial\beta_\theta}{\partial\varphi} - \frac{1}{r^2\sin^2\varphi}(P_{99}+P_{10,10})\cos\varphi\frac{\partial\beta_\theta}{\partial\theta} -$$

$$-\frac{1}{r^2}(r^2P_{36}-P_{7,10}-P_{9,10}cotg^2\varphi)\beta_\theta$$

$$L_5(U_\varphi, U_\theta, W, \beta_\varphi, \beta_\theta, \overline{P_{ij}}) =$$

$$\frac{P_{81}}{r^2}\frac{\partial^2 U_\varphi}{\partial\varphi^2} + \frac{1}{r^2\sin\varphi}(P_{85}+P_{91})\frac{\partial^2 U_\varphi}{\partial\varphi\partial\theta} + \frac{1}{r^2\sin^2\varphi}P_{95}\frac{\partial^2 U_\varphi}{\partial\theta^2} +$$

$$+\frac{1}{r^2}(P_{84}+P_{81}+P_{10,1})cotg\varphi\frac{\partial U_\varphi}{\partial\varphi} + \frac{1}{r^2\sin^2\varphi}(P_{94}+P_{10,5})\cos\varphi\frac{\partial U_\varphi}{\partial\theta} +$$

$$+\frac{1}{r^2}(rP_{63}-P_{84}+P_{10,4}cotg^2\varphi)U_\varphi +$$

$$\frac{P_{82}}{r^2}\frac{\partial^2 U_\theta}{\partial\varphi^2} + \frac{1}{r^2\sin\varphi}(P_{84}+P_{92})\frac{\partial^2 U_\theta}{\partial\varphi\partial\theta} + \frac{1}{r^2\sin^2\varphi}P_{94}\frac{\partial^2 U_\theta}{\partial\theta^2} +$$

$$+\frac{1}{r^2}(P_{82}-P_{85}+P_{10,2})cotg\varphi\frac{\partial U_\theta}{\partial\varphi} + \frac{1}{r^2\sin^2\varphi}(P_{10,4}-P_{95})\cos\varphi\frac{\partial U_\theta}{\partial\theta} +$$

$$+\frac{1}{r^2}(rP_{66}+P_{85}-P_{10,5}cotg^2\varphi)U_\theta - I_2\frac{\partial^2 U_\theta}{\partial t^2} +$$

$$\frac{1}{r^2}(P_{81}+P_{84}-rP_{63})\frac{\partial W}{\partial\varphi} + \frac{1}{r^2\sin\varphi}(P_{91}+P_{94}-rP_{66})\frac{\partial W}{\partial\theta} + \frac{1}{r^2}(P_{81}+P_{84}+P_{10,1}+P_{10,4})cotg\varphi W + \tag{C-2.5}$$

$$\frac{P_{87}}{r^2}\frac{\partial^2\beta_\varphi}{\partial\varphi^2} + \frac{1}{r^2\sin\varphi}(P_{8,10}+P_{97})\frac{\partial^2\beta_\varphi}{\partial\varphi\partial\theta} + \frac{1}{r^2\sin^2\varphi}P_{9,10}\frac{\partial^2\beta_\varphi}{\partial\theta^2} +$$

$$+\frac{1}{r^2}(P_{89}+P_{87}+P_{10,7})cotg\varphi\frac{\partial\beta_\varphi}{\partial\varphi} + \frac{1}{r^2\sin^2\varphi}(P_{99}+P_{10,10})\cos\varphi\frac{\partial\beta_\varphi}{\partial\theta} +$$

$$-\frac{1}{r^2}[P_{89}-P_{10,9}cotg^2\varphi + r^2P_{63}]\beta_\varphi +$$

$$\frac{P_{88}}{r^2}\frac{\partial^2\beta_\theta}{\partial\varphi^2} + \frac{1}{r^2\sin\varphi}(P_{89}+P_{98})\frac{\partial^2\beta_\theta}{\partial\varphi\partial\theta} + \frac{1}{r^2\sin^2\varphi}P_{99}\frac{\partial^2\beta_\theta}{\partial\theta^2} +$$

$$+\frac{1}{r^2}(P_{88}+P_{10,8}+P_{8,10})cotg\varphi\frac{\partial\beta_\theta}{\partial\varphi} + \frac{1}{r^2\sin^2\varphi}P_{10,9}\cos\varphi\frac{\partial\beta_\theta}{\partial\theta} +$$

$$+\frac{1}{r^2}(P_{8,10}-P_{10,10}cotg^2\varphi - r^2P_{66})\beta_\theta - I_3\frac{\partial^2 U_\theta}{\partial t^2}$$

2.16 Appendix D-2

Conical Shells

TheL_i's equations are given as follows:

$$L_1(U_x,U_\theta,W,\beta_x,\beta_\theta,\overline{P_{ij}})=$$

$$P_{11}\frac{\partial^2 U_x}{\partial x^2}+\frac{(P_{15}+P_{51})}{x\sin\alpha}\frac{\partial^2 U_x}{\partial x\partial\theta}+\frac{P_{55}}{x^2\sin^2\alpha}\frac{\partial^2 U_x}{\partial\theta^2}-\frac{P_{15}}{x^2\sin\alpha}\frac{\partial U_x}{\partial\theta}-I_1\frac{\partial^2 U_x}{\partial t^2}+$$

$$+P_{12}\frac{\partial^2 U_\theta}{\partial x^2}+\frac{(P_{14}+P_{52})}{x\sin\alpha}\frac{\partial^2 U_\theta}{\partial x\partial\theta}+\frac{P_{54}}{x^2\sin^2\alpha}\frac{\partial^2 U_\theta}{\partial\theta^2}-\frac{P_{14}}{x^2\sin\alpha}\frac{\partial U_\theta}{\partial\theta}+$$

$$+\frac{P_{14}}{x\tan\alpha}\frac{\partial W}{\partial x}+\frac{P_{54}}{x^2\sin^2\alpha}\cos\alpha\frac{\partial W}{\partial\theta}-\frac{P_{14}}{x^2\tan\alpha}W+$$

$$+P_{17}\frac{\partial^2\beta_x}{\partial x^2}+\frac{(P_{1,10}+P_{57})}{x\sin\alpha}\frac{\partial^2\beta_x}{\partial x\partial\theta}+\frac{P_{5,10}}{x^2\sin^2\alpha}\frac{\partial^2\beta_x}{\partial\theta^2}-\frac{P_{1,10}}{x^2\sin\alpha}\frac{\partial\beta_x}{\partial\theta}-I_2\frac{\partial^2\beta_x}{\partial t^2}+$$

$$+P_{18}\frac{\partial^2\beta_\theta}{\partial x^2}+\frac{(P_{19}+P_{58})}{x\sin\alpha}\frac{\partial^2\beta_\theta}{\partial x\partial\theta}+\frac{P_{59}}{x^2\sin^2\alpha}\frac{\partial^2\beta_\theta}{\partial\theta^2}-\frac{P_{19}}{x^2\sin\alpha}\frac{\partial\beta_\theta}{\partial\theta}$$

(D-2.1,2.2)

$$L_2(U_x,U_\theta,W,\beta_x,\beta_\theta,\overline{P_{ij}})=$$

$$P_{21}\frac{\partial^2 U_x}{\partial x^2}+\frac{(P_{25}+P_{41})}{x\sin\alpha}\frac{\partial^2 U_x}{\partial x\partial\theta}+\frac{P_{45}}{x^2\sin^2\alpha}\frac{\partial^2 U_x}{\partial\theta^2}-\frac{P_{25}}{x^2\sin\alpha}\frac{\partial U_x}{\partial\theta}+$$

$$+P_{22}\frac{\partial^2 U_\theta}{\partial x^2}+\frac{(P_{24}+P_{42})}{x\sin\alpha}\frac{\partial^2 U_\theta}{\partial x\partial\theta}+\frac{P_{44}}{x^2\sin^2\alpha}\frac{\partial^2 U_\theta}{\partial\theta^2}-\frac{P_{24}}{x^2\sin\alpha}\frac{\partial U_\theta}{\partial\theta}-\frac{P_{66}}{x^2\tan^2\alpha}U_\theta-I_1\frac{\partial^2 U_\theta}{\partial t^2}+$$

$$+\frac{P_{24}+P_{63}}{x\tan\alpha}\frac{\partial W}{\partial x}+\frac{P_{44}+P_{66}}{x^2\sin^2\alpha}\cos\alpha\frac{\partial W}{\partial\theta}-\frac{P_{24}}{x^2\tan\alpha}W+$$

$$+P_{27}\frac{\partial^2\beta_x}{\partial x^2}+\frac{(P_{2,10}+P_{47})}{x\sin\alpha}\frac{\partial^2\beta_x}{\partial x\partial\theta}+\frac{P_{4,10}}{x^2\sin^2\alpha}\frac{\partial^2\beta_x}{\partial\theta^2}-\frac{P_{2,10}}{x^2\sin\alpha}\frac{\partial\beta_x}{\partial\theta}+\frac{P_{63}}{x\tan\alpha}\beta_x+$$

$$+P_{28}\frac{\partial^2\beta_\theta}{\partial x^2}+\frac{(P_{29}+P_{48})}{x\sin\alpha}\frac{\partial^2\beta_0}{\partial x\partial\theta}+\frac{P_{49}}{x^2\sin^2\alpha}\frac{\partial^2\beta_\theta}{\partial\theta^2}-\frac{P_{29}}{x^2\sin\alpha}\frac{\partial\beta_\theta}{\partial\theta}+\frac{P_{66}}{x\tan\alpha}\beta_\theta-I_2\frac{\partial^2\beta_\theta}{\partial t^2}$$

$$L_3(U_x,U_\theta,W,\beta_x,\beta_\theta,\overline{P_{ij}})=$$

$$-\frac{P_{41}}{x\tan\alpha}\frac{\partial U_x}{\partial x}-\frac{P_{45}}{x^2\sin^2\alpha}\cos\alpha\frac{\partial U_x}{\partial\theta}+$$

$$(-)\frac{(P_{36}+P_{42})}{x\tan\alpha}\frac{\partial U_\theta}{\partial x}-\frac{(P_{44}+P_{66})}{x^2\sin^2\alpha}\cos\alpha\frac{\partial U_\theta}{\partial\theta}+\frac{P_{36}}{x^2\tan\alpha}U_\theta+$$

$$+P_{33}\frac{\partial^2 W}{\partial x^2}+\frac{(P_{36}+P_{63})}{x\sin\alpha}\frac{\partial^2 W}{\partial x\partial\theta}+\frac{P_{66}}{x^2\sin^2\alpha}\frac{\partial^2 W}{\partial\theta^2}-\frac{P_{36}}{x^2\sin\alpha}\frac{\partial W}{\partial\theta}-\frac{P_{44}}{x^2\tan^2\alpha}W-I_1\frac{\partial^2 W}{\partial t^2}+$$

$$+(P_{33}-\frac{P_{47}}{x\tan\alpha})\frac{\partial\beta_x}{\partial x}+(\frac{P_{63}}{x\sin\alpha}-\frac{P_{4,10}\cos\alpha}{x^2\sin^2\alpha})\frac{\partial\beta_x}{\partial\theta}+$$

$$+(P_{36}-\frac{P_{48}}{x\tan\alpha})\frac{\partial\beta_\theta}{\partial x}+\frac{(P_{66}-P_{49}cotg\alpha)}{x\sin\alpha}\frac{\partial\beta_\theta}{\partial\theta}$$

$$L_4(U_x,U_\theta,W,\beta_x,\beta_\theta,\overline{P_{ij}})= \qquad \text{(D-2.3.2.4)}$$

$$P_{71}\frac{\partial^2 U_x}{\partial x^2}+\frac{(P_{75}+P_{10,1})}{x\sin\alpha}\frac{\partial^2 U_x}{\partial x\partial\theta}+\frac{P_{10,5}}{x^2\sin^2\alpha}\frac{\partial^2 U_x}{\partial\theta^2}-\frac{P_{75}}{x^2\sin\alpha}\frac{\partial U_x}{\partial\theta}-I_2\frac{\partial^2 U_x}{\partial t^2}+$$

$$+P_{72}\frac{\partial^2 U_\theta}{\partial x^2}+\frac{(P_{74}+P_{10,2})}{x\sin\alpha}\frac{\partial^2 U_\theta}{\partial x\partial\theta}+\frac{P_{10,4}}{x^2\sin^2\alpha}\frac{\partial^2 U_\theta}{\partial\theta^2}-\frac{P_{74}}{x^2\sin\alpha}\frac{\partial U_\theta}{\partial\theta}+\frac{P_{36}}{x\tan\alpha}U_\theta+$$

$$+(\frac{P_{74}}{x\tan\alpha}-P_{33})\frac{\partial W}{\partial x}+\frac{(\frac{P_{10,4}}{x}cotg\alpha-P_{36})}{x\sin\alpha}\frac{\partial W}{\partial\theta}-\frac{P_{74}}{x^2\tan\alpha}W+$$

$$+P_{77}\frac{\partial^2\beta_x}{\partial x^2}+\frac{(P_{10,7}+P_{7,10})}{x\sin\alpha}\frac{\partial^2\beta_x}{\partial x\partial\theta}+\frac{P_{10,10}}{x^2\sin^2\alpha}\frac{\partial^2\beta_x}{\partial\theta^2}-\frac{P_{7,10}}{x^2\sin\alpha}\frac{\partial\beta_x}{\partial\theta}-P_{33}\beta_x-I_3\frac{\partial^2\beta_x}{\partial t^2}+$$

$$+P_{78}\frac{\partial^2\beta_\theta}{\partial x^2}+\frac{(P_{10,8}+P_{79})}{x\sin\alpha}\frac{\partial^2\beta_\theta}{\partial x\partial\theta}+\frac{P_{10,9}}{x^2\sin^2\alpha}\frac{\partial^2\beta_\theta}{\partial\theta^2}-\frac{P_{79}}{x^2\sin\alpha}\frac{\partial\beta_\theta}{\partial\theta}-P_{36}\beta_\theta$$

$$
\begin{aligned}
&L_5(U_x,U_\theta,W,\beta_x,\beta_\theta,\overline{P_{ij}})= \\
&P_{91}\frac{\partial^2 U_x}{\partial x^2}+\frac{(P_{85}+P_{91})}{x\sin\alpha}\frac{\partial^2 U_x}{\partial x\partial\theta}+\frac{P_{95}}{x^2\sin^2\alpha}\frac{\partial^2 U_x}{\partial\theta^2}-\frac{P_{85}}{x^2\sin\alpha}\frac{\partial U_x}{\partial\theta}+ \\
&+P_{82}\frac{\partial^2 U_\theta}{\partial x^2}+\frac{(P_{84}+P_{92})}{x\sin\alpha}\frac{\partial^2 U_\theta}{\partial x\partial\theta}+\frac{P_{94}}{x^2\sin^2\alpha}\frac{\partial^2 U_\theta}{\partial\theta^2}-\frac{P_{84}}{x^2\sin\alpha}\frac{\partial U_\theta}{\partial\theta}+\frac{P_{66}}{x\tan\alpha}U_\theta-I_2\frac{\partial^2 U_\theta}{\partial t^2}+ \\
&+\left(\frac{P_{84}}{x\tan\alpha}-P_{63}\right)\frac{\partial W}{\partial x}+\frac{\left(\frac{P_{94}}{x}cotg\alpha-P_{66}\right)}{x\sin\alpha}\frac{\partial W}{\partial\theta}-\frac{P_{84}}{x^2\tan\alpha}W+ \\
&+P_{87}\frac{\partial^2\beta_x}{\partial x^2}+\frac{(P_{97}+P_{8,10})}{x\sin\alpha}\frac{\partial^2\beta_x}{\partial x\partial\theta}+\frac{P_{9,10}}{x^2\sin^2\alpha}\frac{\partial^2\beta_x}{\partial\theta^2}-\frac{P_{8,10}}{x^2\sin\alpha}\frac{\partial\beta_x}{\partial\theta}-P_{63}\beta_x+ \\
&+P_{88}\frac{\partial^2\beta_\theta}{\partial x^2}+\frac{(P_{98}+P_{89})}{x\sin\alpha}\frac{\partial^2\beta_\theta}{\partial x\partial\theta}+\frac{P_{99}}{x^2\sin^2\alpha}\frac{\partial^2\beta_\theta}{\partial\theta^2}-\frac{P_{89}}{x^2\sin\alpha}\frac{\partial\beta_\theta}{\partial\theta}-P_{66}\beta_\theta-I_3\frac{\partial^2\beta_\theta}{\partial t^2}
\end{aligned}
\tag{D-2.5}
$$

2.17 Appendix E-2

Circular Plates

The five differential equations of motion are defined as follows:

$$
\begin{aligned}
&L_1(U_r,U_\theta,W,\beta_r,\beta_\theta,\overline{P_{ij}})= \\
&P_{11}\frac{\partial^2 U_r}{\partial r^2}+\frac{1}{r}(P_{51}+P_{15})\frac{\partial^2 U_r}{\partial r\partial\theta}+\frac{P_{55}}{r^2}\frac{\partial^2 U_r}{\partial\theta^2}-\frac{P_{15}}{r^2}\frac{\partial U_r}{\partial\theta}-I_1\frac{\partial^2}{\partial t^2}+P_{12}\frac{\partial^2 U_\theta}{\partial r^2}+\frac{1}{r}(P_{52}+P_{14})\frac{\partial^2 U_\theta}{\partial r\partial\theta}+\frac{P_{54}}{r^2}\frac{\partial^2 U_\theta}{\partial\theta^2}-\frac{P_{14}}{r^2}\frac{\partial U_\theta}{\partial\theta}+ \\
&P_{17}\frac{\partial^2\beta_r}{\partial r^2}+\frac{1}{r}(P_{1,10}+P_{57})\frac{\partial^2\beta_r}{\partial r\partial\theta}+\frac{P_{5,10}}{r^2}\frac{\partial^2\beta_r}{\partial\theta^2}-\frac{P_{1,10}}{r^2}\frac{\partial\beta_r}{\partial\theta}-I_2\frac{\partial^2}{\partial t^2}+P_{18}\frac{\partial^2\beta_\theta}{\partial r^2}+\frac{1}{r}(P_{19}+P_{58})\frac{\partial^2\beta_\theta}{\partial r\partial\theta}+\frac{P_{59}}{r^2}\frac{\partial^2\beta_\theta}{\partial\theta^2}-\frac{P_{19}}{r^2}\frac{\partial\beta_\theta}{\partial\theta}
\end{aligned}
\tag{E-2.1}
$$

$$L_2(U_r,U_\theta,W,\beta_r,\beta_\theta,\overline{P_{ij}})=$$

$$P_{21}\frac{\partial^2 U_r}{\partial r^2}+\frac{1}{r}(P_{41}+P_{25})\frac{\partial^2 U_r}{\partial r\partial\theta}+\frac{P_{45}}{r^2}\frac{\partial^2 U_r}{\partial\theta^2}-\frac{P_{25}}{r^2}\frac{\partial U_r}{\partial\theta}+P_{22}\frac{\partial^2 U_\theta}{\partial r^2}+\frac{1}{r}(P_{42}+P_{24})\frac{\partial^2 U_\theta}{\partial r\partial\theta}+\frac{P_{44}}{r^2}\frac{\partial^2 U_\theta}{\partial\theta^2}-\frac{P_{24}}{r^2}\frac{\partial U_\theta}{\partial\theta}-I_1\frac{\partial^2}{\partial t^2}+$$

$$P_{27}\frac{\partial^2\beta_r}{\partial r^2}+\frac{1}{r}(P_{2,10}+P_{47})\frac{\partial^2\beta_r}{\partial r\partial\theta}+\frac{P_{4,10}}{r^2}\frac{\partial^2\beta_r}{\partial\theta^2}-\frac{P_{2,10}}{r^2}\frac{\partial\beta_r}{\partial\theta}+P_{28}\frac{\partial^2\beta_\theta}{\partial r^2}+\frac{1}{r}(P_{29}+P_{48})\frac{\partial^2\beta_\theta}{\partial r\partial\theta}+\frac{P_{49}}{r^2}\frac{\partial^2\beta_\theta}{\partial\theta^2}-\frac{P_{29}}{r^2}\frac{\partial\beta_\theta}{\partial\theta}-I_2\frac{\partial^2}{\partial t^2}$$

$$L_3(U_r,U_\theta,W,\beta_r,\beta_\theta,\overline{P_{ij}})=$$

$$P_{33}\frac{\partial^2 W}{\partial r^2}+\frac{1}{r}(P_{36}+P_{63})\frac{\partial^2 W}{\partial r\partial\theta}+\frac{P_{66}}{r^2}\frac{\partial^2 W}{\partial\theta^2}-\frac{P_{36}}{r^2}\frac{\partial W}{\partial\theta}-I_1\frac{\partial^2}{\partial t^2}+$$

$$P_{33}\frac{\partial\beta_r}{\partial r}+\frac{P_{63}}{r}\frac{\partial\beta_r}{\partial\theta}+P_{36}\frac{\partial\beta_\theta}{\partial r}+\frac{P_{66}}{r}\frac{\partial\beta_\theta}{\partial\theta}$$

(E-2.2,2.3)

$$L_4(U_r,U_\theta,W,\beta_r,\beta_\theta,\overline{P_{ij}})=$$

$$P_{71}\frac{\partial^2 U_r}{\partial r^2}+\frac{1}{r}(P_{10,1}+P_{75})\frac{\partial^2 U_r}{\partial r\partial\theta}+\frac{P_{10,5}}{r^2}\frac{\partial^2 U_r}{\partial\theta^2}-\frac{P_{75}}{r^2}\frac{\partial U_r}{\partial\theta}-I_2\frac{\partial^2}{\partial t^2}+P_{72}\frac{\partial^2 U_\theta}{\partial r^2}+\frac{1}{r}(P_{74}+P_{10,2})\frac{\partial^2 U_\theta}{\partial r\partial\theta}+\frac{P_{10,4}}{r^2}\frac{\partial^2 U_\theta}{\partial\theta^2}-\frac{P_{74}}{r^2}\frac{\partial U_\theta}{\partial\theta}+$$

$$(-)P_{33}\frac{\partial W}{\partial r}-\frac{P_{36}}{r}\frac{\partial W}{\partial\theta}+ \qquad \text{(E-2.4)}$$

$$P_{77}\frac{\partial^2\beta_r}{\partial r^2}+\frac{1}{r}(P_{7,10}+P_{10,7})\frac{\partial^2\beta_r}{\partial r\partial\theta}+\frac{P_{10,10}}{r^2}\frac{\partial^2\beta_r}{\partial\theta^2}-\frac{P_{7,10}}{r^2}\frac{\partial\beta_r}{\partial\theta}-P_{33}\beta_r-I_3\frac{\partial^2}{\partial t^2}+P_{78}\frac{\partial^2\beta_\theta}{\partial r^2}+\frac{1}{r}(P_{79}+P_{10,8})\frac{\partial^2\beta_\theta}{\partial r\partial\theta}+\frac{P_{10,9}}{r^2}\frac{\partial^2\beta_\theta}{\partial\theta^2}-\frac{P_{79}}{r^2}\frac{\partial\beta_\theta}{\partial\theta}-P_{36}$$

$$L_5(U_r,U_\theta,W,\beta_r,\beta_\theta,\overline{P_{ij}})=$$

$$P_{81}\frac{\partial^2 U_r}{\partial r^2}+\frac{1}{r}(P_{91}+P_{85})\frac{\partial^2 U_r}{\partial r\partial\theta}+\frac{P_{95}}{r^2}\frac{\partial^2 U_r}{\partial\theta^2}-\frac{P_{85}}{r^2}\frac{\partial U_r}{\partial\theta}+P_{82}\frac{\partial^2 U_\theta}{\partial r^2}+\frac{1}{r}(P_{84}+P_{92})\frac{\partial^2 U_\theta}{\partial r\partial\theta}+\frac{P_{94}}{r^2}\frac{\partial^2 U_\theta}{\partial\theta^2}-\frac{P_{84}}{r^2}\frac{\partial U_\theta}{\partial\theta}-I_2\frac{\partial^2}{\partial t^2}+$$

$$(-)P_{63}\frac{\partial W}{\partial r}-\frac{P_{66}}{r}\frac{\partial W}{\partial\theta}+P_{87}\frac{\partial^2\beta_r}{\partial r^2}+\frac{1}{r}(P_{8,10}+P_{97})\frac{\partial^2\beta_r}{\partial r\partial\theta}+\frac{P_{9,10}}{r^2}\frac{\partial^2\beta_r}{\partial\theta^2}-\frac{P_{8,10}}{r^2}\frac{\partial\beta_r}{\partial\theta}-P_{63}\beta_r+ \qquad \text{(E-2.5)}$$

$$P_{88}\frac{\partial^2\beta_\theta}{\partial r^2}+\frac{1}{r}(P_{89}+P_{98})\frac{\partial^2\beta_\theta}{\partial r\partial\theta}+\frac{P_{99}}{r^2}\frac{\partial^2\beta_\theta}{\partial\theta^2}-\frac{P_{89}}{r^2}\frac{\partial\beta_\theta}{\partial\theta}-P_{66}\beta_\theta-I_3\frac{\partial^2}{\partial t^2}$$

2.18 REFERENCES

[1] A.S. Saada 1993 Elasticity Theory and Applications. Pergamon Press.

[2] W. Flügge 1960 Stresses in Shells. Julius Springer, Berlin, Germany.

[3] H. Kraus 1967 Thin Elastic Shells. John Wiley, New York.

[4] F.I. Niordson 1980 Introduction to Shell Theory. Technical University of Denmark.

[5] C.W. Bert 1975 Composite materials-Structural Design and Analysis Part I,Vol.7. edited by C.C. Chamis, Academic, NY, 207-258. Analysis of Shells.

[6] E. Reissner 1952 J. Math. Phys. **31**, 109-119. Stress-strain Relations in The Theory of Thin Elastic Shells.

[7] P.M. Naghdi 1956 Applied Mechanics Reviews **9(9)**, 365-388. A Survey of Recent Progress in the Theory of Elastic Shells.

[8] A.W. Leissa 1973 Vibration of Shells. NASA SP-288.

[9] S.A. Ambartsumyan 1964 Theory of Anisotropic Shells. NASA-TT-F-118.

[10] J.L. Sanders 1962 Quarterly Appl. Math. **XXI(1)**, 21-36. Nonlinear Theories for Thin Shells.

[11] W.T. Koiter 1960 Pro. Sym. on Theory of Thin Elastic Shells, Amsterdam, North Holland , 12-32. A Consistent First Approximation in the General Theory of Thin Elastic Shells.

[12] V.V. Novozhilov 1959 The Theory of Thin Shells. P. Noordhoff Ltd.

[13] H. Mollman 1981 Introduction to the Theory of Thin Shells. John Wiley, New York.

[14] S.B. Dong, K.S. Pister and R.L. Taylor 1962 J. of Aero Sci. **29**, 969-975. On the Theory of Laminated Anisotropic Shells and Plates.

[15] F.K. Bogner, R.L. Fox and L.A. Schmit 1967 J. AIAA Journal **5**, 745 -750. A

Cylindrical Shell Discrete Element.

[16] L.S.D. Morley 1959 Quart. J. Mech. and Applied Math. **12**, 89-99. An Improvement on Donnell's Approximation for Thin-Walled Circular Cylinders.

[17] E. Reissner 1955 Quart. Appl. Math. **13(3)**, 279-290. On Axisymmetric Vibrations of Shallow Spherical Shells.

[18] S. Cheng 1973 Journal of Applied Mech. **40**, 582-588. On An Accurate Theory for Circular Cylindrical Shells.

[19] S. Cheng and F.B. He 1984 Journal of Applied Mech. **51**, 736-744. Theory of Orthotropic and Composite Cylindrical Shells, Accurate and Simple Fourth Order Governing Equations.

[20] P. Markov 1982 Journal in Applied Mech. Review **35**, 1088-1089. Cheng's Theory for Shells of General Curvature.

[21] J. Padovan and J.F. Lestingi 1974 Computers & Structures **4**,1159-1172. Complex Numerical Integration Procedure for Static Loading of Anisotropic Shells of

Revolution.

[22] Y. Basar and Y. Ding 1990 Int. J. Solids Struct. **26(1)**, 83-97. Finite Rotation Elements for the Non-Linear Analysis of Thin Shell Structures.

[23] G.Z. Voyiadjis and G. Shi 1991 Int. J. of Solids and Struct. **27(3)**, 261-282. A Refined Two-Dimensional Theory for Thick Cylindrical Shells.

[24] J.N. Reddy 1984 Energy and Variational Methods in Applied Mechanics. John Wiley, New York.

[25] F.B. Hildebrand, E. Reissner and G.B. Thomas 1949 Notes on the Foundations of the Theory of Small Displacements of Orthotropic Shells. NACA-TN-1833.

[26] P.M. Naghdi 1957 Quart. Appl. Math. **14**, 369-380. On the Theory of Thin Elastic Shells.

[27] E. Reissner 1950 Journal Math. and Physics **29**, 90-95. On a Variational Theorem in Elasticity.

[28] S.B. Dong and F.K.W. Tso 1972 Journal Applied Mechanics **39**,1091-1096. On a Laminated Orthotropic Shell Theory Including Transverse Shear Deformation.

[29] E. Reissner 1945 Journal of Applied Mech. **12**,37-45. The Effect of Transverse Shear Deformation on the Bending of Elastic Plates.

[30] E. Reissner 1950 Small Bending and Stretching of Sandwich-Type Shells. NACA Report No. 975.

[31] R.D. Mindlin 1951 Journal of Applied Mech. **18**, 31-38. Influence of Rotatory Inertia and Shear on Flexural Motions of Isotropic Elastic Plates.

[32] J.M. Whitney 1973 Journal of Appl. Mech. **40**, 302-304. Shear Correction Factors for Orthotropic Laminates Under Static Load.

[33] C.W. Bert 1973 Journal of Composite Materials **7**, 525-529. Simplified Analysis of Static Shear Factors for Beams of Nonhomogeneous Cross Section.

[34] M. Levinson 1980 Mechanics Research Communications **7**, 343-350. An Accurate Simple Theory of the Static and Dynamic of Elastic Plates.

[35] J.N. Reddy 1984 Journal of Applied Mech. **51**, 745-752. A Simple Higher Order Theory for Laminated Composite Plates.

[36] A. Bhimaraddi 1984 Int. J. Solids Struc. **20 (7)**, 623-630. A Higher Order Theory for Free Vibration Analysis of Circular Cylindrical Shells.

[37] S.T. Gulati and F. Essenburg 1967 Journal of Applied Mechanics **34**, 659-666. Effects of Anisotropy in Axisymmetric Cylindrical Shells.

[38] J.A. Zukas and J.R. Vinson 1971 Journal of Applied Mechanics **38**, 400-407. Laminated Transversely Isotropic Cylindrical Shells.

[39] T.M. Hsu and J.T.S. Wang 1970 AIAA Journal **8(12)**, 2141-2146. A Theory of Laminated Cylindrical Shells Consisting of Layers of Orthotropic Lamina.

[40] R.A. Chaudhuri and K.R. Abu-Arja 1989 AIAA Journal **27**, 1597-1605. Closed-Form Solutions for Arbitrary Laminated Anisotropic Cylindrical Shells (Tubes) Including Shear Deformation.

[41] A.A. Khdeir , L. Librescu and D. Frederick 1989 Acta Mech. **77**, 1-12. A Shear

Deformable Theory of Laminated Composite Shallow Shell-Type Panels and Their Response Analysis I:Static Response.

[42] J.M. Whitney and C.T. Sun 1973 Journal of Sound and Vibration **30**, 85-97. A Higher Order Theory for Extensional Motion of Laminated Anisotropic Shells and Plates.

[43] J.M. Whitney and C.T. Sun 1974 Journal of Applied Mechanics **41**, 47-53. A Refined Theory for Laminated Anisotropic Cylindrical Shells.

[44] J.N. Reddy 1984 J. Eng. Mech. ASCE **110 (5)**. 794-809. Exact Solutions of Moderately Thick Laminated Shells.

[45] J.L. Sanders 1959 An Improved First Approximation Theory for Thin Shells,. NASA. **TR R-24**, 1-23.

[46] M. Touratier 1992 Int. J. Solids Structures **29(11)**, 1379-1399. A Generalization of Shear Deformation Theories for Axisymmetric Multilayered Shells.

[47] Ji-Fan He 1995 Journal of Reinforced Plastics and Composites **14**, 652-674. Static Analysis of Laminated Shells Using a Refined Shear Deformation Theory.

[48] D.M. Sciuva 1987 ASME J. Appl. Mech. **54**, 589-596. An Improved Shear Deformation Theory for Moderately Thick Multilayered Anisotropic Shells and Plates.

[49] E. Reissner 1987 Theory in Refined Dynamic Theory of Beams, Plates and Shells. Berlin: Springer-Verlag ,17-27. On a Certain Mixed Variational Theorem and on Laminated Elastic Shell.

[50] H.S. Jing and K.G. Tzeng 1993b AIAA Journal, **31(4)**, 765-773. Refined Shear Deformation Theory of Laminated Shells.

[51] H.S. Jing and M.L. Liao 1989 Int. J. Numer. Meth. Engng. **28**, 2813-2827. Partial Hybrid Stress element for the Analysis of Thick Laminated Composite Plates.

[52] T. Kant and C.K. Ramesh 1976 Proc., I.A.S.S. World Congress on Space Enclosures, Montreal Canada , 401-409. Analysis of Thick Orthotropic Shells.

[53] E.I. Grigolyuk and G.M. Kulikov 1988 Mechanics of Composite Materials **24(2)**, 231-241. General Direction of Development of the Theory of Multi-layered Shells.

[54] R.J. Jones 1975 Mechanics of Composite Materials. MacGraw Hill, New York.

[55] J.M. Whitney and N.J. Pagano 1970 Journal of Applied Mech. **37**,1031-1036. Shear Deformation in Heterogeneous Plates.

[56] C.W. Bert 1967 Journal of Composite Materials **1**, 414-423. Structural Theory or Laminated Anisotropic Elastic Shells.

[57] N.J. Pagano 1969 Journal Composite Materials **3**, 398-411. Exact Solutions for Composite Laminates in Cylindrical Bending.

[58] N.J. Pagano 1970 Journal Composite Materials **4**, 330-343. Influence of Shear Coupling in Cylindrical Bending of Anisotropic Laminates.

[59] N.J. Pagano 1970 Journal Composite Materials **4**, 20-34. Exact Solutions for Rectangular Bidirectional Composites and Sandwich Plates.

[60] N.J. Pagano and A.S.D. Wang 1971 Journal Composite Materials **5**, 521-528. Further Study of Composite Laminates Under Cylindrical Bending. Journal Composite Materials.

[61] S. Srinivas and A.K. Rao 1970 Int. J. Solid Struc. **6**, 1463-1481. Bending

,Vibration and Buckling of Simply Supported Thick Orthotropic Rectangular Plates and Laminates.

[62] J.G. Ren 1987 Composites Science Tech. **29**, 81-90. Exact Solutions for Laminated Cylindrical Shells in Cylindrical Bending.

[63] Y. Hirano 1979 Journal of Appl. Mech. **46**, 233-234. Buckling of Angle Ply Laminated Circular Cylindrical Shells.

[64] J.N. Reddy and W.C. Chao 1981 Nuclear Engineering and Design **64**,153-167. A Comparison of Closed Form and Finite Element Solutions of Thick, Laminated, Anisotropic Rectangular Plates.

[65] J.N. Reddy and N.D. Phan 1985 Journal of Sound and Vibration **98(2)**,157-170. Stability and Vibration of Isotropic, Orthotropic and Laminated Plates According to a Higher Order Shear Deformation Theory.

[66] K.P. Soldatos and G.J. Tzivanidis 1982 Journal of Appl. Math. and Physics **33**, 230-240. Buckling and Vibration of Cross-Ply Laminated Circular Cylindrical Panels.

[67] K.P. Soldatos and G.J. Tzivanidis 1982 Journal of Sound and Vibration. **82(3)**(1982) 425-434. Buckling and Vibration of Cross-Ply Laminated Non Circular Cylindrical Panels.

[68] S. Cheng and B.P. Ho 1963 AIAA Journal **1(4)**, 892-898. Stability of Heterogeneous Aeolotropic Cylindrical Shells Under Combined Loading.

[69] G.E.O. Widera and S.W. Chung 1970 Journal of Applied Mathematics and Physics **21**, 378-399. A Theory for Non-Homogeneous Anisotropic Cylindrical Shells.

[70] G.E.O. Widera and D.L. Logan 1980 Journal of Engineering Mechanics Division ASCE **(EM6)** **106**, 1053-1074. Refined Theories for Non- Homogeneous Anisotropic Cylindrical Shells: Part I -Derivation.

[71] A.K. Noor and J.M. Peters 1987 Computer Meth. in Appl. Mech. and Eng. **61**, 277-301. Vibration Analysis of Laminated Anisotropic Shells of Revolution.

[72] O.C. Zienkiewicz 1989 The Finite Element Method. McGraw-Hill , New York.

[73] L. Librescu and R. Schmidt 1988 Int. J. Non-Linear Mech. **23**, 217-229. Refined

Theories of Elastic Anisotropic Shells Accounting for Small Strains and Moderate Rotations.

[74] T. Kant and Kommineni 1992 Journal of Reinforced Plastics and Composites. **11**, 1049-1076. Geometrically Non-Linear Analysis of Doubly Curved Laminated and Sandwich Fibre Reinforced Composite Shells with a Higher Order Theory and C^0 Finite Elements.

[75] J.A. Figüeiras and D.R.J. Owen 1984 In: Hinton, Owen, editors, Finite Element Software for Plates and Shells. Pineridge Press. Analysis of Elasto-Plastic and Geometrically Non-Linear Anisotropic Plates and Shells.

[76] L.X. Kui, G.Q. Liu and O.C. Zienkiewicz 1985 IJNME **21**, 2145-2155. A Generalized Displacement Method for the Finite Element Analysis of Thin Shells.

[77] C.W. Pryor and R.M. Barker 1971 AIAA Journal **9(5)**, 912-917. A Finite Element Analysis Including Transverse Shear Effects For Applications to Laminated Plates.

[78] R.L. Hinrichsen and A.N. Palazotto 1986 AIAA Journal **24(11)**, 1836-1842. Non-Linear Finite Element Analysis of Thick Composite Plates Using a Cubic Spline

Function.

[79] L.A. Schmit and G.R. Monforton 1970 AIAA Journal **8(8)**, 1454-1461. Finite Deflection Discrete Element Analysis of Sandwich Plates and Cylindrical Shells with Laminated Faces.

[80] K.A. Meroueh 1986 Computers& Structures **24(5)**, 691-705. On a Formulation of a Non-Linear Theory of Plates and Shells with Applications.

[81] K.S. Surana 1983 IJNME **19**, 581-615. Geometrically Non-Linear Formulation for Curved Shell Elements.

[82] K.S. Surana 1986 Computers and Structures **24(1)**. 47-55. A Generalized Geometrically Non-Linear Formulation with Large Rotations for Finite Elements with Rotational Degrees of Freedom.

[83] S.B. Dong 1968 Journal of Acoust. Soc. Ame. **44**, 1628-1635. Free Vibration of Laminated Orthotropic Cylindrical shells.

[84] W. Flügge and V.S. Kelkar 1968 Int.J. of Solids & Struct. **4**, 397-420. The Problem of an Elastic Circular Cylinder.

[85] J.C. Yao 1969 The Aeronautical Quarterly **20**, 365-381. Long Cylindrical Tube Subjected to Two Diametrically Opposite Loads.

[86] T.K. Varadan and K. Bhaskar 1991 Composite Structures **17**, 141-156. Bending of Laminated Orthotropic Cylindrical Shells -An Elasticity Approach.

[87] N.J. Pagano 1972 Journal of Appl. Mech. **39**, 791-796. The Stress Field in a Cylindrically Anisotropic Body Under Two-Dimensional Surface Traction.

[88] J.G. Ren 1989 Composite Science and Technology **11(4)**, 277-292. Analysis of Simply Supported Laminated Circular Cylindrical Shell Roofs.

[89] A.W. Leissa, J.K. Lee and A.J. Wang 1981 Journal of Sound and Vibration **78(3)**, 311-328. Vibrations of Cantilevered Shallow Cylindrical Shells of Rectangular Planform.

[90] C.W. Bert and P.H. Francis 1974 AIAA Journal **12(9)**, 1173-1186. Composite Material Mechanics: Structural Mechanics.

[91] C.W. Bert and M. Kumar 1982 Journal of Sound and Vibration **81(1)**, 107-121.

Vibration of Cylindrical Shells of Bimodulus Composite Materials.

[92] Y.S. Hsu, J.N. Reddy and C.W. Bert 1981 Journal of Thermal Stresses **4**,155-177. Thermoelasticity of Circular Cylindrical Shells Laminated of Bimodulus Composite Materials.

[93] J.M. Whitney and A.W. Leissa 1969 Journal of Applied Mechanics. **36**, 261-266. Analysis of Heterogeneous Anisotropic Plates.

[94] C.W. Bert and T.L.C. Chen 1978 Int. J. Solids and Structures **14**, 465-473. Effect of Shear Deformation on Vibration of Anti-symmetric Angle-Ply Laminated Rectangular Plates.

[95] S.H. Jing and . Tzeng 1995 Int. J. Solids Structures **32(10)**, 1459-1476. Analysis of Thick Laminated Anisotropic Cylindrical Shells Using a Refine Shell Theory.

[96] K.Suzuki and A.W. Leissa 1985 Journal Applied Mechanics **52**,149-154. Free Vibrations of Non-Circular Cylindrical Shells Having Circumferentially Varying Thickness.

[97] K. Suzuki and A.W. Leissa 1986 Journal of Sound and Vibration **107(1)**, 1-15.

Exact Solutions for the Free Vibrations of Open Cylindrical Shells with Circumferentially Varying Curvature and Thickness.

[98] H.S. Jing and K.G. Tzeng 1993 AIAA Journal **31(11)**, 2121-2129. Approximate Elasticity Solution for Laminated Anisotropic Finite Cylinders.

[99] J.N. Reddy 1984 Int. J. Solids Structures **20 (9/10)**, 881-896. A Refined Nonlinear Theory of Plates with Transverse Shear Deformation.

[100] H.S. Jing and K.G. Tzeng 1993a Compo. Struc. **23**, 319-337. On Two Mixed Variational Principles for Thick Laminated Composite Plates.

[101] R.D. Mindlin and M.A. Medick 1959 Journal of Appl. Mech. **26**, 561-569. Extensional Vibrations of Elastic Plates.

[102] L. Ren-Huai and H. Ling-Hui 1991 Int. J. Non-Linear Mech. **26(5)**, 537-545. A Simple Theory for Non-Linear Bending of Laminated Composite Rectangular Plates Including Higher-Order Effects.

[103] I.H. Shames and C.L. Dym 1985 Energy and Finite Element Methods in

Structural Mechanics. Mc-Graw Hill, New York.

[104] D.O. Braush and B.O. Almroth 1975 Buckling of Bars , Plates and Shells. McGraw Hill, New York.

[105] J.M. Rotter and P.T. Jumiski 1988 Non-Linear Strain-Displacement Relations for Axisymmetric Thin Shells, The University of Sydney: Research Report No.R563, 45 P.

[106] Y.M. Fu and C.Y. Chia 1993 Int. J. Non-Linear Mechanics **28(3),** 313-327. Non-Linear Vibration and Post buckling of General Laminated Circular Cylindrical Thick Shells with Non-Uniform Boundary Conditions.

[107] H.N. Chu 1961 Journal Aeronaut. Sci. **28**, 602-609. Influence of Large Amplitude on Flexural Vibrations of a Thin Circular Cylindrical Shells.

[108] J.L. Nowinski 1963 AIAA Journal **1**, 617-620. Non-Linear Transverse Vibrations of Orthotropic Cylindrical Shells.

[109] D.A. Evenson 1967 Non-Linear Flexural Vibrations of Thin Walled Circular Cylinders. NASA **TN D- 4090**.

[110] S. Atluri 1972 Int. J. Solids Struct. **8**, 549-569. A Perturbation Analysis of Non-Linear Flexural Vibrations of a Circular Cylindrical Shell.

[111] J.C. Chen and C.D. Babcork 1975 AIAA Journal **13**, 868-876. A Perturbation Analysis of Non-Linear Flexural Vibrations of a Circular Cylindrical Shell.

[112] J. Ramachandran 1979 Journal of Sound and Vibration **64(1)**, 97-106. Non-Linear Vibrations of Cylindrical Shells of Varying Thickness in an Incompressible Fluid.

[113] N.S. Khot 1970 AIAA Journal **8**, 229-235. Buckling and Post buckling Behaviour of Composite Cylindrical Shells Under Axial Compression.

[114] V.P. Iu and C.Y. Chia 1988 Int. J. Solids Struct. **24**, 195-210. Non-Linear Vibration and Post-Buckling of Unsymmetric Cross-Ply Circular Cylindrical Shells.

[115] L. Librescu 1987 Quart. Appl. Math. **45**, 1-22. Refined Geometrically Nonlinear Theories of Anisotropic Laminated Shells.

[116] J.N. Reddy and K. Chandrashekhara 1985 AIAA Journal **23 (3)**, 440-441. Nonlinear Analysis of Laminated Shells Including Transverse Shear Strains.

[117] H. Rothert and S. Di 1994 IASS Bulletin **35(114)**, 15-32. Geometrically Nonlinear Analysis of Laminated Shells by Hybrid Formulation and Higher Order Theory.

[118] A.K. Noor and J.M. Peters 1986 AIAA Journal **24(9)**, 1545-1553. Non-Linear Analysis of Anisotropic Panels.

[119] M. Stein 1986 AIAA Journal **24**, 1537-1544. Non-Linear Theory for Plates and Shells Including the Effects of Transverse Shearing.

[120] A.N. Palazotto and W.P. Witt 1985 Computers& Structures **21**, 1213-1234. Formulation of a Non-Linear Compatible Finite Element for Analysis of Laminated Composites.

[121] S.T. Dennis and A.N. Palazotto 1990 AIAA Journal **28(6)**, 1082-1088. Static Response of a Cylindrical Composite Panel with Cutouts Using a Geometrically Non-Linear Theory.

[122] C.T. Tsai and A.N. Palazotto 1991 Int. J. Non-Linear Mechanics **26(3/4)**, 379-388. On the Finite Element Analysis of Non-Linear Vibration for Cylindrical Shells with High-Order Shear Deformation Theory.

[123] R.E. Martin and D. Drew 1971 Non-Linear Analysis of Anisotropic Shells of Revolution, Texas A&M University, INST of STATISTIC, 29P.

[124] B. Budiansky and P. Radkowski 1963 J. AIAA **1(8)**, 1833-1842. Numerical Analysis of Unsymmetrical Bending Shells of Revolution.

[125] T. Kant and Kommineni 1994 Computers &Structures **52(6)**, 1243-1259. Geometrically Non-Linear Transient Analysis of Laminated Composite and Sandwich Shells with Refined Theory and C° Finite Elements.

[126] E.H. Dowell and C.S. Ventres 1968 Int. J. Solids Struct. **4**, 975-991. Modal Equations for Non-Linear Flexural Vibrations of Cylindrical Shells.

[127] G. Horrigmoe and P.G. Bergan 1976 Comput. Meth. Appl. Mech. and Eng. **7**, 201-217. Incremental Variational Principles and Finite Element Models for Non-Linear Problems.

[128] W. Wunderlich 1977 In: K.J. Bathe, J.T. Oden and W. Wunderlich, editors. Formulations and Computational Algorithms in Finite Element Analysis. Cambridge, MA: MIT Press, 193-239. Incremental Formulation for Geometrically Non-Linear Problems.

[129] J.A. Stricklin, W.E. Haisler and W.A. Von Reiseman 1973 AIAA Journal **11**, 292-299. Evaluation of Solution Procedures for Materials and/or Geometrical Non-Linear Structural Analysis.

[130] A.K. Noor and S.J. Hartley 1977 Computers & Structures **7**, 615-626. On Linear Shell Analysis via Mixed Isoparametric Elements.

[131] W.C. Chao and J.N. Reddy 1983 In: G.J. Dvorak, editor. Mechanics of Composite Materials. AMD, New York, ASME **58**, 19-31. Geometrically Non-Linear Analysis of Layered Composite Shell.

[132] R. W.H. Wu and E.A. Witmer 1974 Int. J. Solids Structures **10(2)**, 243-260. The Dynamic Responses of Cylindrical Shells Including Geometric and Material Non Linearities.

[133] G. Datt and G. Touzot 1984 Une présentation de la méthode des éléments finis. Moloine SA Editeur Paris.

[134] K.J. Bathe 1982 Finite Element Procedure in Engineering Analysis. Prentice-

Hall.

[135] J.N. Reddy 1984 An Introduction to the Finite Element Method. McGraw-Hill, New York.

[136] R.H. Gallagher 1986 Introduction aux éléments finis. Prentice-Hall.

[137] A.A. Lakis and M.P. Païdoussis 1971 Journal of Sound and Vibration **19**, 1-15. Free Vibration of Cylindrical Shells Partially Filled with Liquid.

[138] A.A. Lakis and M.P. Païdoussis 1972 Journal of Sound and Vibration **25**,1-27. Prediction of the Response of a Cylindrical Shell to Arbitrary of Boundary Layer-Induced Random Pressure Field.

[139] A.A. Lakis and M.P. Païdoussis 1972 J. Mech. Eng. Science **14(1)**, 49-71. Dynamic Analysis of Axially Non-Uniform Thin Cylindrical Shells.

[140] A.A. Lakis 1976 Proc.of the Int. Conf. on Pressure Surges, London, UK, 11-15. Effects of Fluid Pressures on the Vibration Characteristics of Cylindrical Vessels.

[141] A.A. Lakis and R. Doré 1978 Int. J. Solids and Struct. **14(6)**, 499-516. Effects of Fluid Pressures on the Vibration Characteristics of Cylindrical Vessels.

[142] A.A. Lakis and A. Laveau 1991 Int. J. Solids and Struct. **28(9)**,1079-1094. Non-Linear Dynamic of Anisotropic Cylindrical Shells Containing a Flowing Fluid.

[143]A.A. Lakis and M. Sinno 1992 Int. J. For Num. Meth. in Eng. **33**, 235-268. Free Vibration of Axisymmetric and Beam-Like Cylindrical Shells Partially Filled with Liquid.

[144] A. Selmane and A.A. Lakis 1997 Journal of Fluids and Structures **11**, 111-134. Vibration Analysis of Anisotropic Open Cylindrical Shells Containing Flowing Fluid.

[145]A. Selmane and A.A. Lakis 1997 Int. Journal for Numerical Methods in Engineering **40**, 1115-1137. Influence of Geometric Non-Linearities on the Vibration of Orthotropic Open Cylindrical Shells.

[146] A. Selmane and A.A. Lakis 1997 Journal of Sound and Vibration **202(1)**, 67-93. Non-Linear Dynamic Analysis of Orthotropic Open Cylindrical Shells Subjected to a

Flowing Fluid.

[147] A. Selmane and A.A. Lakis 1997 Journal of Computers and Structures **62(1)**, 1-12. Dynamic Analysis of Anisotropic Open Cylindrical Shells.

[148] A.A. Lakis, N.Q. Tuy and A. Selmane 1989 Proc. of the Int. Symposium on Structural Analysis and Optimization, Paris, France. 80- 85.Analysis of Axially Non-Uniform Thin Spherical Shells.

[149] A.A. Lakis , P. Van Dyke and H. Ouriche 1992 Journal of Fluids and Struct. **6**, 135-162. Dynamic Analysis of Anisotropic Fluid-Filled Conical Shells.

[150] A.A. Lakis and A. Selmane 1990 Proc. of Third Int. Con. on Numerical Methods in Engineering. Swansea ,UK, 239-248. Analysis of Non-Uniform Circular and Annular Plates.

[151] A.A. Lakis and A. Selmane 1990 Proc. of the Int. Con. on Advances in Structural Testing, Analysis and Design. Bangalore, India, 499-505. Hybrid Finite Element Analysis of Non-Uniform Circular and Annular Plates.

[152] A.A. Lakis and A. Selmane 1997 Int. Journal for Numerical Methods in Engineering **40** , 969-990. Classical Solution Shape Functions in the Finite Element Analysis of Circular and Annular Plates.

[153] M.P. Païdoussis and J.P. Denis 1972 Journal of Sound and Vibration **20**, 9-26. Flutter of Thin Cylindrical Shells Conveying Fluid.

[154] D.S. Weaver and T.E. Unny 1973 Journal of Applied Mechanics ASME **40**, 48-52. On the Dynamic Stability of Fluid Conveying Pipes.

[155] L. Cheng 1994 Journal of Sound and Vibration **174**, 641-654. Fluid-Structural Coupling of a Plate Ended Cylindrical Shell :Vibration and Internal Sound Field.

[156] R.K. Jain 1974 Journal of Sound and Vibration **37(3)**, 379-388. Vibration of Fluid-Filled, Orthotropic Cylindrical Shells.

[157] M.P. Païdoussis and G.X. Li 1993 Journal of Fluids and Structure **7**, 137-204. Pipes Conveying Fluid: A Model Dynamical Problem.

[158] M.K. Au-Yang 1986 ASME J. of Vibration, Acoustics and Reliability in Design **108**, 339-347. Dynamics of Coupled Fluid-Shells.

[159] S.J. Brown 1982 ASME Journal of Pressure Vessels Techn. **104**, 2-19. A Survey of Studies Into the Hydrodynamic Response of Fluid-Coupled Circular Cylinders.

[160] B. Brenneman and M.K. Au-Yang 1992 Journal of Pressure Vessel Technology **114**, 133-138. Fluid-Structure Dynamics with Modal Hybrid Method.

[161] Crouzet-Pascal and H. Garnet 1972 Journal of Applied Mechanics, 521-526. Response of a Ring -Reinforced Cylindrical Shell ,Immersed in a Fluid Medium, to an Axisymmetric Step Pulse.

[162] R.H. MacNeal, R. Citerley and M. Chrgian 1979 Transactions of the Fifth Intern. Conference on Structural Mech. in Reactor Techn., Paper **B4/9**, Berlin, Germany. A New Method for Analysing Fluid-Structure Interaction Using MSC/NASTRAN.

[163] P.B. Gonçalves and R.C. Batista 1987 Journal of Sound and Vibration **113(1)**, 59-70. Frequency Response of Cylindrical Shells Partially Submerged or Field with Liquid.

[164] R.P.S. Han and J.P. Liu 1994 Journal of Sound and Vibration **176(2)**, 235-253.

Free Vibration Analysis of a Fluid-Loaded Variable Thickness Cylindrical Tanks.

2.19 NOMENCLATURE

A_1, A_2 :Lamé's parameters

A_{ij} : extensional stiffness Eq. (2.21)

a_i, b_i (i =1,2,3)defined by Eq. (2.20)

B_{ij} : bending-extensional coupling stiffness Eq. (2.21)

D_{ij} :bending stiffness Eq. (2.21)

$E_{\alpha\beta}$: Young's moduli of elasticity Eq.(2.10)

f_i (i=0,2,4,...,10): coefficients of the characteristic equation Eq.(2.48)

$G_{\alpha\beta}$: rigidity moduli of elasticity Eq.(2.10)

g_i (i=1,2,3): geometrical scale factor quantities Eq.(2.2)

I_i : inertia moment

L_i : motion equations Eq.(2.34)

M_i (i=1,2): the moment resultants applied in α_i's direction

M_{ij} (i,j=1,2 ; i $\neq$j) :the moment resultants applied on the middle surface in α_j's direction (α_i =cte)

$\overline{m}$: defined by Eq.(2.47)

N_i (i=1,2): the in-plane force resultants applied in α_i's direction

N_{ij} (i,j=1,2; i $\neq$j) :the in-plane force resultants applied on the middle surface in α_j's direction (α_i=cte)

P_{ij} : terms of elasticity matrix(i=1,... ,10 ; j=1,..., 10)

Q_{ij} (i,j=1,2,3) : the elastic stiffness in the material coordinates Eq.(2.10)

$\overline{Q}_{ij}$ (i,j=1,2,3) : the elastic stiffness in the global coordinates Eq.(2.14)

Q_i (i=1,2) : the transverse force resultants

q_1, q_2, q_n : the external force vector

R_i (i=1,2) : curvature radius

h : thickness of the shell

h_k: thickness of the lamina Eq.(2.21)

h_i (i=0,2,4,...,8): Coefficients of the characteristic equation Eq.(2.49)

u_1, u_2, w : the displacement vector components

$\ddot{u}_i$ (i=1,2) and $\ddot{w}$: defined by Eq.(2.15)

T_{ij} (i,j=1,2,3) :transformation matrix elements Eq.(2.13)

α_1 and α_2: curvilinear coordinates of the surface

β_1 and β_2: the rotations of tangents to the reference surface

$\ddot{\beta}_i$ (i=1,2): defined by Eq.(2.15)

ε_i : deformation vector components

σ_i : normal stress vector components Eq.(2.9)

τ_{ij} : shear stress vector components Eq.(2.9)

ρ : density of the shell material

ζ : distance of the point from the corresponding point on the reference surface along the normal direction

η : roots of characteristic equation Eq. (2.48,2.49)

ε^0_1 and ε^0_2 : normal strains of the reference surface

γ_{in} (i=1,2) and γ_{12}: shearing strain components Eq.(2.3)

γ^0_1 and γ^0_2 : in-plane shearing strains of the reference surface

κ_1 and κ_2 : change in the curvature of the reference surface

τ_1 and τ_2 : torsion of the reference surface

μ^0_1 and μ^0_2 : the shearing strains

ν_{ij} : Poisson ratios Eq.(2.10)

Table 2.1 Roots of characteristic equations for $12R^2(1-\nu^2)/t^2=4\times10^4$ and $\nu=0.3$

	n=2		n=3		n=10	
	λ_1	λ_2	λ_1	λ_2	λ_1	λ_2
Sanders*	10.2020 ±9.8026i	.1757 ±.17051i	10.4650 ±9.5682i	.43961 ±.40598i	15.2860 ±7.3965i	5.2613 ±2.5783i
Flügge†	10.1952 ±9.8104i	.1758 ±.17040i	10.4581 ±9.5761i	.43990 ±.40570i	15.2533 ±7.4851i	5.2610 ±2.5719i
Vlasov†	10.1955 ±9.8107i	.1756 ±.17060i	10.4591 ±9.5771i	.43960 ±.40590i	15.2881 ±7.4183i	5.2759 ±2.5766i
Timoshenko†	10.2025 ±9.8027i	.1758 ±.17040i	10.4652 ±9.5632i	.44000 ±.40560i	15.2840 ±7.3951i	5.2645 ±2.5741i
Novozhilov†	10.2022 ±9.8024i	.1757 ±.17050i	10.4645 ±9.5674i	.43960 ±.40601i	15.2796 ±7.3859i	5.2657 ±2.5779i
Naghdi& Berry†	10.2027 ±9.8030i	.1760 ±.17020i	10.4660 ±9.5690i	.44030 ±.40520i	15.2737 ±7.4030i	5.2860 ±2.5342i

* Data from computer programe of authors [139]
† Data given in [139]

Table 2.2 Roots of characteristic equations (2.48,2.49) for isotropic materials(m=1).

	$\eta_1,\ldots,\eta_8$ Ref.[47]	$\eta_1,\ldots,\eta_{10}$ Present
R/t=10 L/R=1	±2.2097±2.9127i ±4.8899±1.2551i	±1.6124±3.0289i , ±34.0672 ±5.3039±1.3630i
R/t=20 L/R=1	±2.3750±3.8041i ±5.4940±1.6173i	±1.2718±3.7971i ,±69.0023 ±6.0694±2.1717i

Table 2.3 Roots of characteristic equations(2.48,2.49) for anisotropic materials (0°/90°/90°/0°).

	$\eta_1,\ldots,\eta_8$ Ref.[47]	$\eta_1,\ldots,\eta_{10}$ Present
R/t=10 L/R=1m= 1	±2.7864, ±21.9869 ±5.4093±4.3960i	±1.7076±3.1030i , ±16.2057 ±5.4873±1.2258i
R/t=10 L/R=1 m=2	±4.5689, ±43.9733 ±11.0662±8.6369i	±4.5045±3.8386i ,±6.3269 ±12.7532±4.7411i

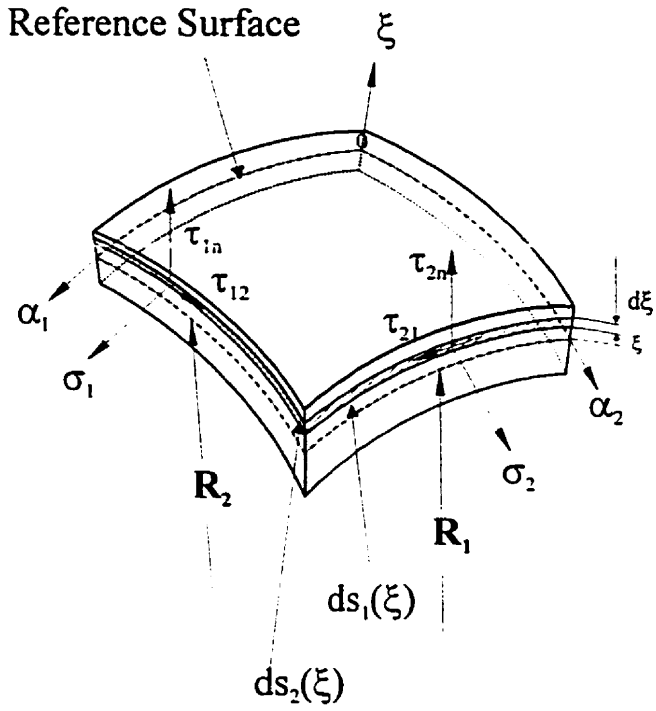

(A)

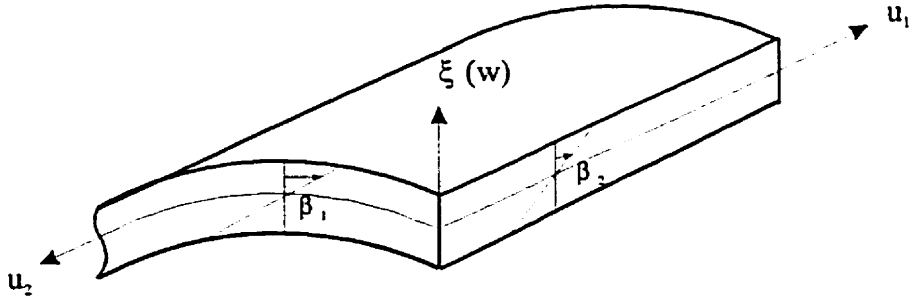

(B)

Figure 2.1 A) Differential element of a shell
B) Definition of shell coordinate system

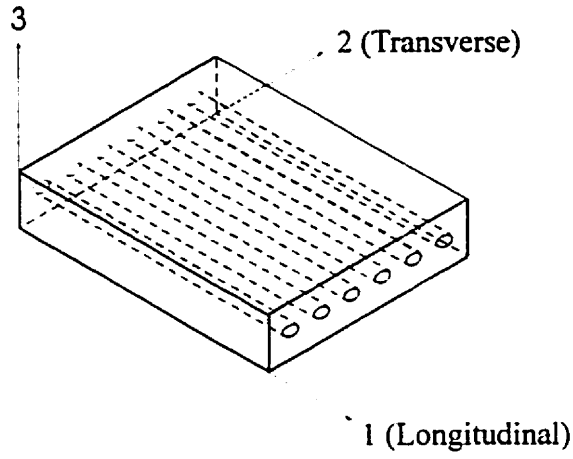

Figure 2.2 Unidirectional lamina and principal coordinate axes

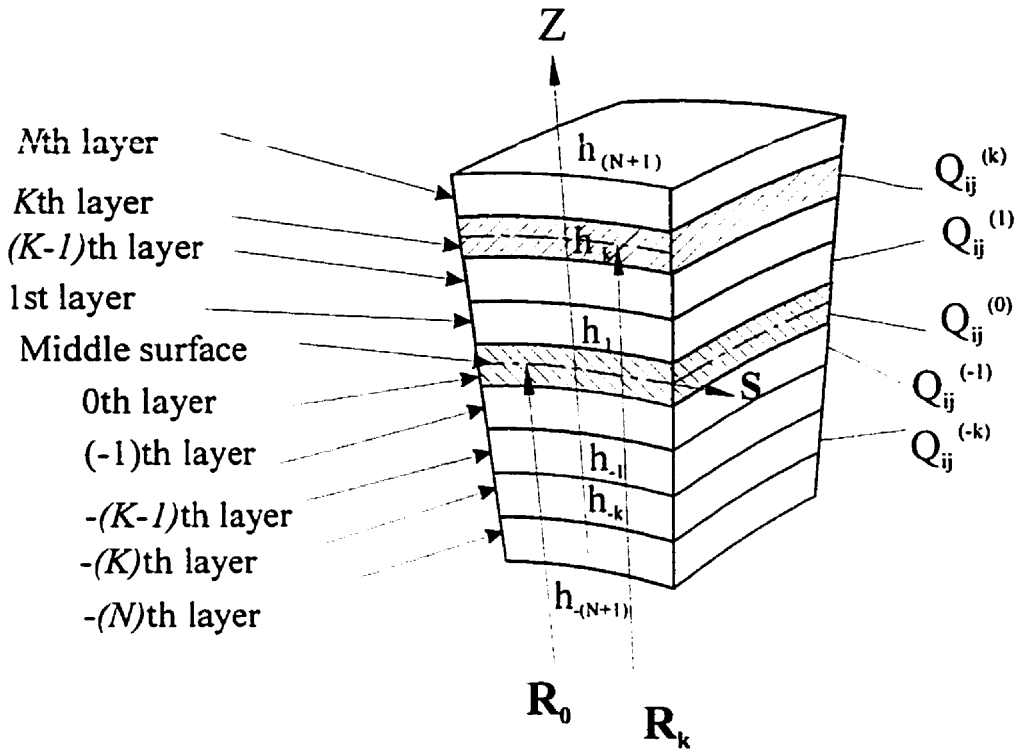

(A)

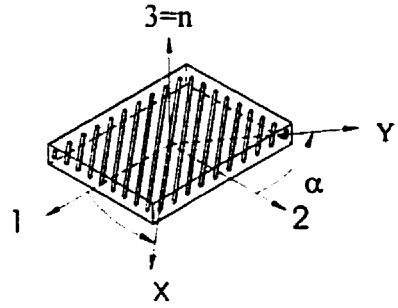

(B)

Figure 2.3 A) Multidirectional laminate with coordinate notation of individual plies
B) A fibre reinforced lamina with global and material coordinate systems

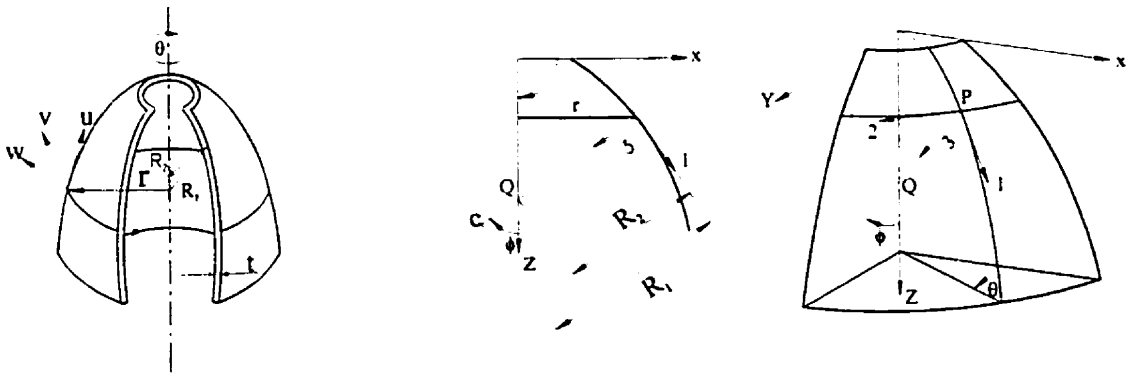

θ=cte : $ds=r_\phi d\phi$ $A_1=R_\phi$ $A_2=R_\theta \sin\phi$

ϕ=cte : $ds=rd\theta$ $R_1=R_\phi$ $R_2=R_\theta$

$\alpha_1=\phi$ $\alpha_2=\theta$ $\partial A_1/\partial\alpha_2=0.$ $\partial A_2/\partial\alpha_1=R_\theta\cos\phi$

Figure 2.4 Surface of Revolution

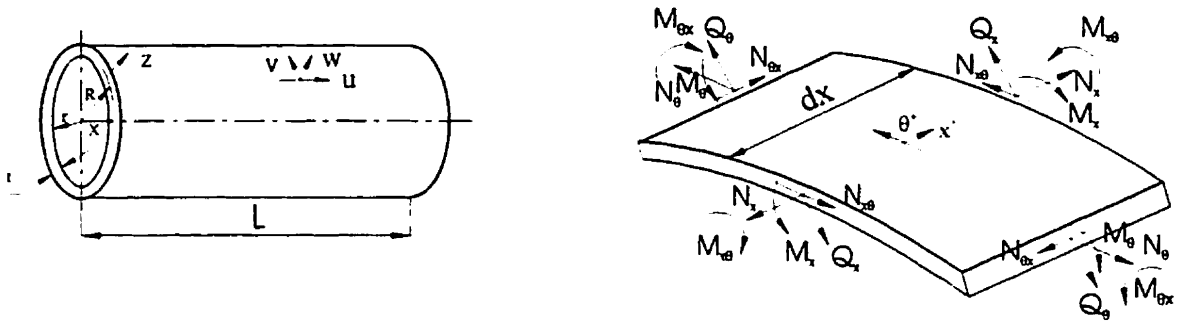

(A)

(B)

$\theta=\theta$ $\qquad R_\phi d\phi=dx$

$\phi=x$ $\qquad R\phi=\infty$ $\quad R_\theta=R$

$\phi=\pi/2$ $\quad \cos\phi=0.$ $\quad \sin\phi=1.$

Figure 2.5 A) Circular cylindrical shell geometry
B) Positive direction of integrated stress quantities

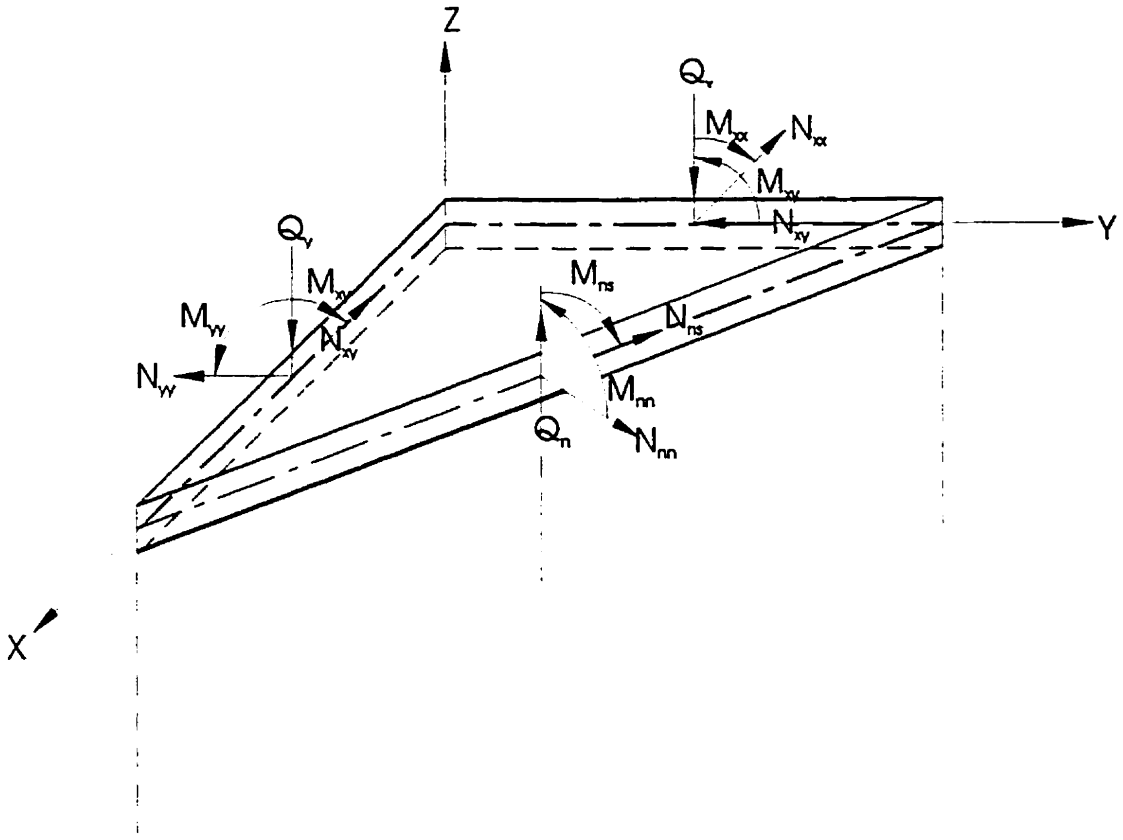

Figure 2.6 Force and moment resultant on a plate element

$r \rightarrow \infty \quad \theta \rightarrow \infty \quad rd\theta \rightarrow dy$

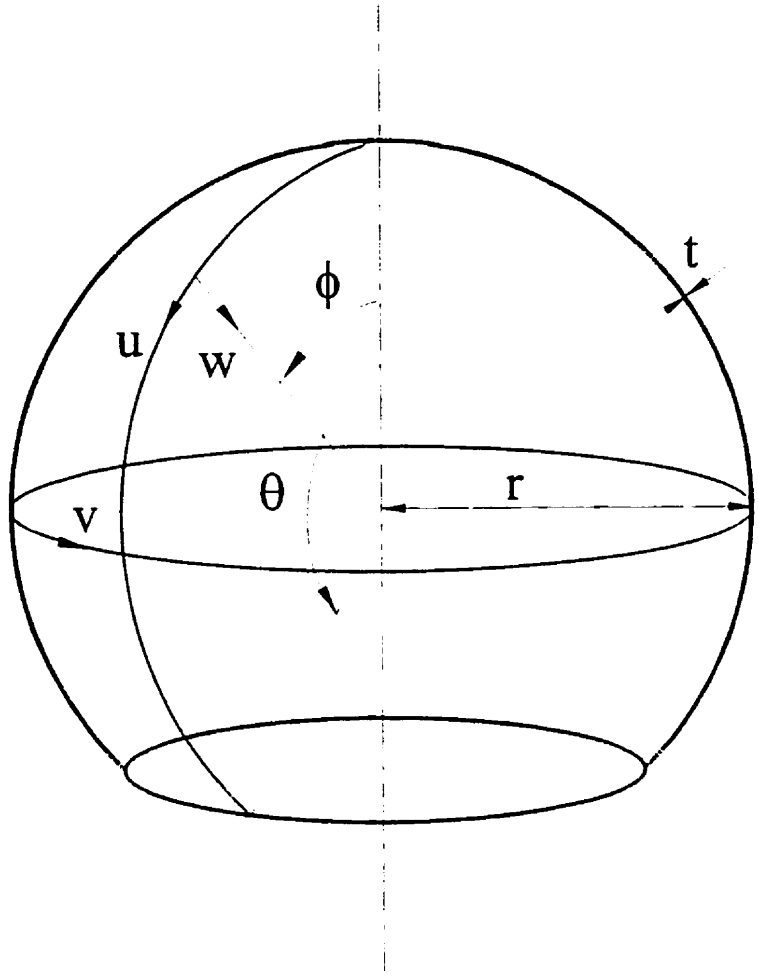

Figure 2.7 Geometry of spherical shell

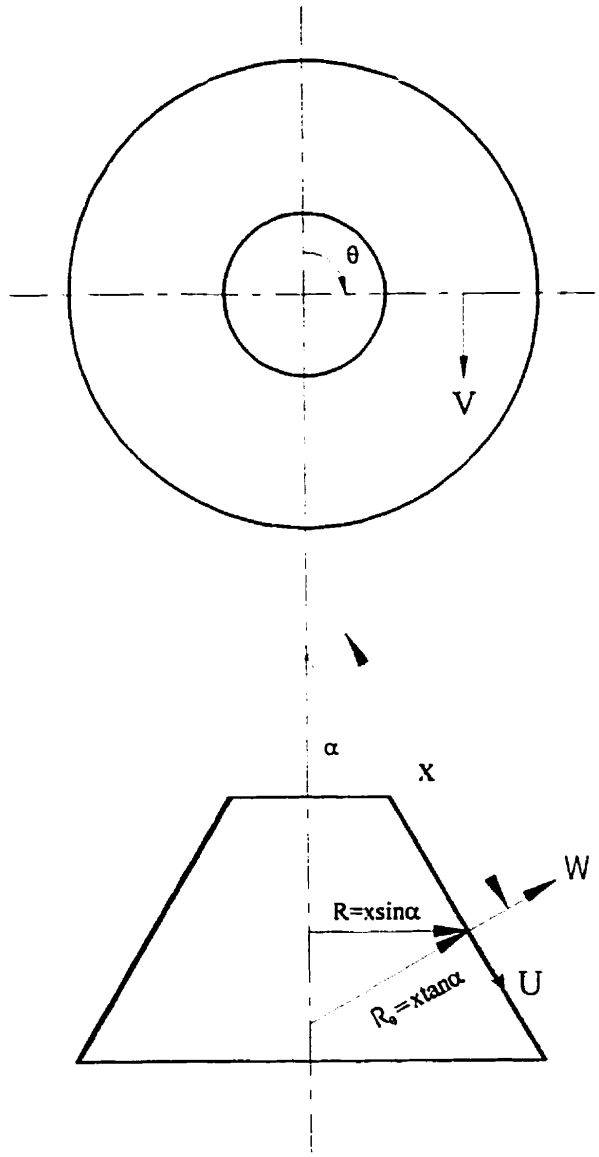

$R_\phi=\infty$ $\sin\phi=\cos\alpha$

$R_\theta=x\tan\alpha$ $\cos\phi=\sin\alpha$

$\phi=\pi/2-\alpha$ $r_\phi d_\phi \rightarrow dx$

Figure 2.8 Geometry of conical shell

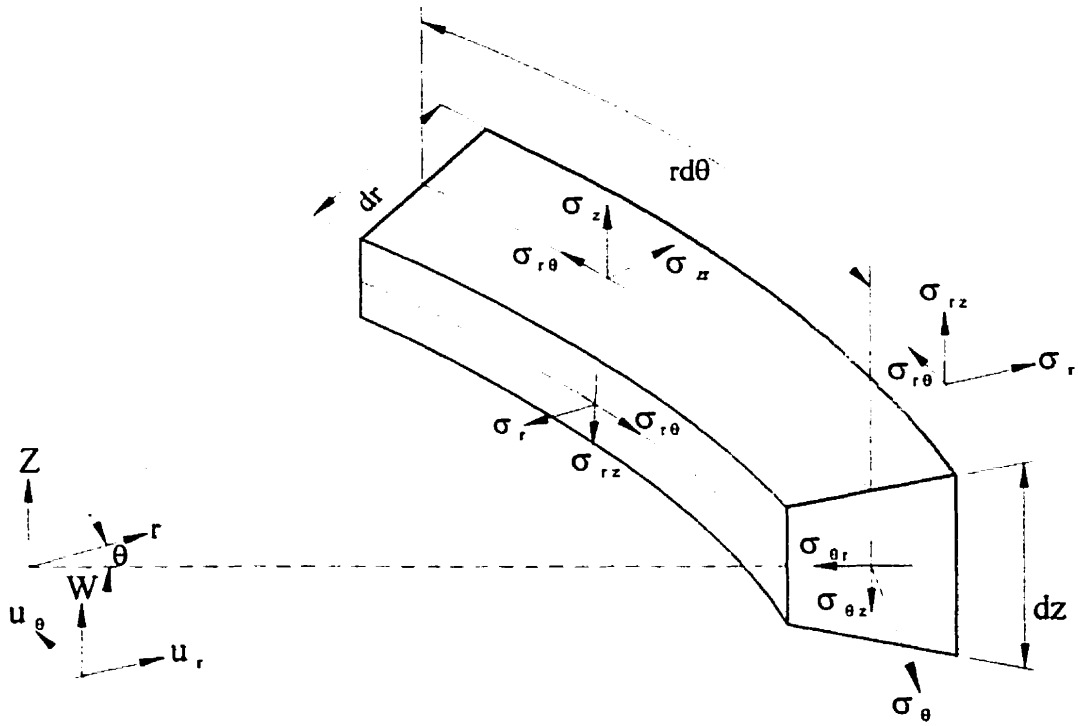

$\alpha=\pi/2$
$x=r$

Figure 2.9 Circular plate element

CHAPITRE III

TRANSVERSE SHEAR DEFORMATION IN FREE VIBRATION ANALYSIS OF ANISOTROPIC OPEN CYLINDRICAL SHELLS★

M. H. Toorani and A. A. Lakis

Département de Génie Mécanique, École Polytechnique de Montréal
Case Postale 6079, Succ. Centre-ville, Montréal, Canada H3C 3A7

3.1 Abstract

This work presents a refined approach to the static and dynamic analysis of thin laminated anisotropic, open and closed cylindrical shells by taking into account the shear deformation effect and rotatory inertia as well as the initial curvature. The method used is a combination of hybrid finite element analysis and the shear deformation theory of shells. The shell is subdivided into cylindrical finite elements and the displacement functions are obtained using the shell equations based on orthogonal curvilinear coordinates. The set of matrices describing their relative contributions to equilibrium is determined by exact analytical integration. This theory gives zero strains for small rigid-body motions and therefore the displacement functions based on it satisfy the convergence criteria of the finite

---

★: Soumis pour publication dans " Journal of Computers& Structures"

element method. This theory yields five coupled linear second-order differential equations with constant coefficients. They are solved in conjunction with five boundary conditions at each edge by a hybrid finite element method. Reasonable agreement is found with other theories.

KEY WORDS: **Hybrid Finite Element, Cylindrical Shell, Vibration, Shear Deformation, Anisotropic**

3.2 Introduction

Shells are widely used as structural elements in modern construction engineering, aircraft construction, ship building, and rocket construction, and in the nuclear, aerospace, aeronautical, petroleum and petrochemical industries. In order to minimize the number of problems which may arise during industrial use, it has become very important that the static and dynamic behavior of these structures, when subjected to different loads, be known and understood.

Many classical shell theories were developed originally for thin elastic shells, in both linear and non-linear cases, and are based on the Love-Kirchhoff assumptions which are as follows:

1) the shell is thin; 2) the displacements and rotation are small; 3) normals to the middle surface of shells before deformation remain normal after deformation, and 4)

transverse normal stress is negligible. These assumptions could lead to gross errors in the prediction of transverse deflections, natural frequencies and buckling load due to the neglect of transverse shear deformations.

Surveys of various classical shell theories can be found in the works of Bert (1980), Reissner (1952) and Naghdi (1956). Papers covering the work of several researchers have been collected by Leissa (1973) into one excellent book. Elegant representations of Love's shell theory can be derived strictly by definitions from surface theory without reference to *3-D* relationships (Kraus 1967 & Ambartsumyan 1964).

There is an inconsistency in Love's original theory since all strains do not vanish for any rigid body motion. This inconsistency was solved by Sanders (1962) by redefining the force and moment resultants in such a way that the rigid body strain anomaly disappeared

The thin shell assumption in Love's theory has been replaced by the less restrictive requirement on the thinness of the shell presented by Flügge, Lure and Byrne (Kraus 1967). Their theory also eliminated the rigid body strain anomaly. Koiter (1960) discussed the significance of the Love's approximations and, based on an order of magnitude study, stated that refinements cannot be consistently made unless transverse deformation effects are included. Other prominent related theories include those of Novozhilov (1959).

The majority of the theories listed above have been applied to a shell so thin that all

transverse deformation effects, transverse stresses and strains, can be neglected. These transverse effects become more pronounced as the shell becomes thicker relative to its in-plane dimensions, especially the transverse shear deformations (Koiter 1960). For this reason, classical theories can be grossly in error in the prediction of transverse deflections, buckling loads or natural frequencies.

These errors are even higher for plates and shells made of advanced composite materials like graphite-epoxy and boron-epoxy, where the ratio of elastic modulus to shear modulus is very large (e.g., of the order *25* to *40* instead of *2.6* for isotropic materials). The shear deformation effect plays a much more important role in reducing the effective stiffness of anisotropic laminated composite plates and shells.

Advanced composite materials are increasingly being used in a variety of industries because they have a high ratio of strength and stiffness to weight. For this reason, structural elements made up of these materials are being extensively used, e.g. in the aerospace, shipbuilding and petrochemical industries, etc., where complex shell configurations are common structural elements and offer unique advantages over those composed of isotropic materials.

In general, these materials are fiber-reinforced laminates, both symmetric and anti-symmetric, cross-ply and angle-ply, which consist of numerous layers each with different fibre orientations. Although the total laminate may exhibit orthotropic-like properties, each

layer of the laminate is usually anisotropic. Therefore, in order to gain insight into the actual stress and strain fields, the individual properties of each layer must be taken into account. A number of theories for layered anisotropic shells exist in the literature. Many of these theories were developed for thin shells and are based on the Kirchhoff-Love hypothesis.

The transverse shear deformation effect on non-linear vibration and post-buckling behaviour is significant, especially for the laminates with moderately significant thickness, a high circumferential wave number and greater number of layers. Study of this effect shows that it can become quite meaningful for some geometrical parameters, such as small radius to thickness or length to thickness ratios, as well as for shorter wavelengths or longer shells.

In addition to the transverse shear deformation, the initial curvature effect should be considered, as indicated by Voyiadjis and Shi (1991) for isotropic materials. The initial curvature effect is very important in making accurate predictions of stresses even in the central region. In the shell structure, the curvature of each parallel surface through the thickness of the shell is different. To consider the initial curvature effect, the term $1+z/R$ has to be included. The presence of curvature effectively increases the structural stiffness.

Hilderbrand, Reissner and Thomas (1949) were the first to make significant contributions by dispensing with all approximations of Love and assuming a three-term Taylor's series expansion for the displacement vector. Naghdi (1957) employed Reissner's

(1950) mixed variational principle to develop a complete shell formulation similar to that of Hilderbrand et al. (1949), retaining two and three terms in the Taylor's series expansions for tangential and transverse displacement components, respectively.

Dong and Tso (1972) were perhaps the first to present a first order shear deformation theory, retaining one and two terms in the Taylor's series for transverse and tangential displacement components respectively . The theory includes the effects of transverse shear deformation through the shell thickness, and thence they construct a laminated orthotropic shell theory. The parabolic shear strain distribution has been used by Bhimaraddi (1984) to analyze the linear vibrational behavior of isotropic cylindrical shells. The effects of transverse shear deformation and transverse isotropy as well as thermal expansion through the thickness of cylindrical shells were considered by Gulati and Essenberg (1967), Dong and his colleagues(1962), Hsu and Wang (1970).

Reddy (1984) extended Sanders' (1959) theory for simply supported cross-ply laminated shells assuming five degrees of freedom per node. The theory is based on a displacement field in which the displacements of the middle surface are expanded as cubic functions of the thickness coordinate, and the transverse displacement is assumed to be constant throughout the thickness. The Navier-type exact solutions for bending and natural vibration are presented for cylindrical and spherical shells under simply supported boundary conditions.

A survey of the analyses of multilayered composite shells using Reissner's mixed variational principle was carried out by Grigolyuk and Kulikov(1988). Noor and Peters (1987) presented an analysis of the free vibration of laminated anisotropic shells of revolution and the sensitivity of their response to anisotropic material coefficients. Noor and Peters' analytical formulation is based on a form of the Sanders-Budiansky shell theory, including the effects of both transverse shear deformation and the laminated anisotropic material response.

Ren (1989) presented an exact solution for simply supported laminated cross-ply circular cylindrical panels of infinite and finite length in the axial direction. Leissa et al. (1981) analysed the vibration of cantilevered cylindrical panels by using the Ritz method, with algebraic polynomial functions for the displacements.

The static response of the axisymmetric problem of arbitrarily laminated, anisotropic cylindrical shells of finite length using three-dimensional elasticity equations was made by Jing and Zeng (1993). The closed cylinder is simply supported at both ends. The accuracy of a solution obtained by the finite element displacement formulation depends on whether the assumed functions accurately model the deformation modes of the given structure. To satisfy this criterion, Lakis and his group have developed a hybrid type of finite element, in which the displacement functions in the finite element method are derived from Sanders' (1959) classical shell theory.

This method has been applied with satisfactory results to the dynamic linear and non-linear analysis of cylindrical shells, both closed and open ((Lakis and Païdoussis (1971), (1972) & Lakis (1976) & Lakis and Doré (1978) & Lakis and Laveau (1991) & Lakis and Sinno (1992), Selmane and Lakis (1997), Toorani and Lakis (1999)), spherical (Lakis et al. 1989), conical (Lakis et al. 1992), isotropic and anisotropic, uniform and axially non-uniform shells, both empty and liquid-filled.

The main purpose of this work is to study the shear deformation, the rotatory inertia and the initial curvature effects on the static and dynamic behaviour of thin, anisotropic and non-uniform open and closed cylindrical shells. The flowing fluid effect on the natural frequencies of these shells will be the subject of a later work.

3.3 Basic Theory and Method

Many classical shell theories were developed for thin elastic shells and a two-dimensional (*2-D*) theory, surface definitions, is used to approximate three-dimensional phenomena. These theories are based on the Love-Kirchhoff assumptions in which transverse shear strains and stresses are frequently excluded. In this particular case, we use general *3-D* strain-displacement relations expressed in arbitrary orthogonal curvilinear coordinates to define the strain displacement relations which can easily be incorporated three-dimensionally.

This work is based on the following assumptions:

a) linear elastic behaviour of laminated anisotropic materials;

b) the shell is thin and therefore we can assume that the normal stress is negligible compared with stress tangential to the shell surface, and also that the transverse normal strain $\varepsilon_3 \cong 0$ because the transverse fibres of the shell are approximately inextensible;

c) *3-D* strain-displacement relations are expressed in arbitrary orthogonal curvilinear coordinates;

d) the transverse shear deformations, the rotatory inertia and the initial curvature form the basis in the development of the governing equations;

Consider the infinitesimal line segment **MN**, which is infinitesimally near another one, of length ***ds*** embedded in a differential volume element **B** before transformation. As a result of the deformation **M** and **N** are displaced to **M*** and **N*** respectively, by the displacement vector ***u*** (Figure 3.1). The change in length of the element **MN** can be expressed by:

$$(ds*)^2-(ds)^2=2\gamma_{ij}dy_i dy_j \tag{3.1}$$

where the quantity $[(ds')^2-(ds)^2]$ is an invariant and $\gamma_{ij}=\gamma_{ji}$ is a second-rank symmetric tensor called Green's strain tensor and y_i are the orthogonal curvilinear coordinates of the undeformed system. The physical strains, ε_{ij}, are defined as [Saada 1993]:

$$\varepsilon_{ij}=\frac{\gamma_{ij}}{h_i h_j} \tag{3.2}$$

where, the h_i are called scale factors and defined by $G_{ij}=h_i^2$ (no sum), and G_{ij} is a metric tensor which links two coordinate systems. The γ_{ij} are given in the Appendix A-3, where the u_i are the coordinates of the displacement vectors, u. For rigid body motion, the elongations ε_{ii} (no sum) and the shears $\varepsilon_{ij}(i\neq j)$ are identically zero, and therefore there are no theoretical limitations.

The geometrical scale factor quantities (h_i's) must be defined to use the strain displacement relations for the shells. We now consider a shell geometry that can be described by orthogonal curvilinear middle surface coordinates, α_1 and α_2, surface normal ξ and radii of curvature, R_1 and R_2 as shown in (Figure 3.2). For this geometry, the scale factor terms are defined below:

$$h_1=\sqrt{E}(1-\xi/R_1),\ h_2=\sqrt{G}(1-\xi/R_2),\ h_3=1 \tag{3.3}$$

where **E** and **G** are called the first fundamental magnitudes and are related to the elements of the surface metric [Kraus 1967 Page 9].

3.3.1 Kinematics

We consider the following kinematic relations for the arbitrary shell described by orthogonal curvilinear coordinates.

$$
\begin{aligned}
U(\alpha_1,\alpha_2,\xi) &= (1+\frac{\xi}{R_1})u_1(\alpha_1,\alpha_2)+\xi\beta_1(\alpha_1,\alpha_2) \\
V(\alpha_1,\alpha_2,\xi) &= (1+\frac{\xi}{R_2})u_2(\alpha_1,\alpha_2)+\xi\beta_2(\alpha_1,\alpha_2) \\
W(\alpha_1,\alpha_2,\xi) &= w_1(\alpha_1,\alpha_2)
\end{aligned}
\tag{3.4}
$$

where the five degrees of freedom, u_1, u_2, w, β_1 and β_2 are functions of the in-plane coordinates α_1 and α_2 in which u_1, u_2 and w are, respectively, the axial, circumferential and radial displacements, and β_α (α=1,2) are rotations of tangents to the reference surface oriented along parametric lines α_1 and α_2 respectively.

These theories relax the Kirchhoff-Love hypothesis which requires normals to the mid-plane to remain normal throughout deformation. If we substitute equations (3.4) into equations (3.2), we obtain the following strain-displacement relations for cylindrical shells:

$$
\begin{aligned}
\varepsilon_x &= \varepsilon^o{}_x + \xi\kappa_x \\
\varepsilon_\theta &= \varepsilon^o{}_\theta + \xi\kappa_\theta \\
\gamma_{x\theta} &= (\gamma^o{}_x + \gamma^o{}_\theta) + \xi(\tau_x + \tau_\theta) \\
\gamma_{xn} &= \mu^o{}_x = 2\varepsilon_{xn} \\
\gamma_{\theta n} &= \mu^o{}_\theta = 2\varepsilon_{\theta n}
\end{aligned}
\tag{3.5}
$$

where:

$$
\begin{aligned}
\varepsilon^o{}_x &= \frac{\partial U_x}{\partial x} &;\quad \kappa_x &= \frac{\partial \beta_x}{\partial x} \\
\varepsilon^o{}_\theta &= \frac{1}{R}\frac{\partial U_\theta}{\partial \theta} + \frac{W}{R} &;\quad \kappa_\theta &= \frac{1}{R}\frac{\partial \beta_\theta}{\partial \theta} \\
\gamma^o{}_x &= \frac{\partial U_\theta}{\partial x} &;\quad \tau_x &= \frac{\partial \beta_\theta}{\partial x} + \frac{1}{2R}\frac{\partial U_\theta}{\partial x} \\
\gamma^o{}_\theta &= \frac{1}{R}\frac{\partial U_x}{\partial \theta} &;\quad \tau_\theta &= \frac{1}{R}\frac{\partial \beta_x}{\partial \theta} - \frac{1}{2R^2}\frac{\partial U_x}{\partial \theta} \\
\mu^o{}_x &= \frac{\partial W}{\partial x} + \beta_x &;\quad \mu^o{}_\theta &= \frac{1}{R}\frac{\partial W}{\partial \theta} - \frac{U_\theta}{R} + \beta_\theta
\end{aligned}
\tag{3.6}
$$

where $\varepsilon^o{}_i$; $\gamma^o{}_i$; κ_i; τ_i and $\mu^o{}_i$ are, respectively, the normal and in-plane shear strain, the change in the curvature and torsion of the reference surface, and the shear strain components. The interested reader is referred to [Toorani and Lakis 1999].

3.3.2 Constitutive Relations

The relationship between the stress and strain vectors (Hook's law) is:

$$
\{\sigma\} = \lfloor P \rfloor \{\varepsilon\} \tag{3.7}
$$

The constitutive equation of the K_{th} lamina (for a lamina of fibre-reinforced

composite material) in the lamina reference axes *(1,2,3)* can be written as follows (Figure 3.3):

$$\begin{Bmatrix} \sigma_1 \\ \sigma_2 \\ \sigma_3 \\ \tau_{23} \\ \tau_{13} \\ \tau_{12} \end{Bmatrix} = \begin{bmatrix} Q_{11} & Q_{12} & Q_{13} & 0 & 0 & 0 \\ Q_{21} & Q_{22} & Q_{23} & 0 & 0 & 0 \\ Q_{31} & Q_{32} & Q_{33} & 0 & 0 & 0 \\ 0 & 0 & 0 & 2Q_{44} & 0 & 0 \\ 0 & 0 & 0 & 0 & 2Q_{55} & 0 \\ 0 & 0 & 0 & 0 & 0 & 2Q_{66} \end{bmatrix} \begin{Bmatrix} \varepsilon_1 \\ \varepsilon_2 \\ \varepsilon_3 \\ \varepsilon_{23} \\ \varepsilon_{13} \\ \varepsilon_{12} \end{Bmatrix} \tag{3.8}$$

$$\tau_{23} = \frac{1}{2} G_{23} \varepsilon_{23} \ , \ \tau_{13} = \frac{1}{2} G_{13} \varepsilon_{13} \ , \ \tau_{12} = \frac{1}{2} G_{12} \varepsilon_{12} \tag{3.9}$$

The [Q] matrix denotes the elastic stiffness in the material coordinates (local axes). The Q_{ij}'s elements are defined as follows:

$$\begin{aligned} Q_{11} &= E_{11}(1 - \nu_{23}\nu_{32})/\Delta \ ; \ Q_{44} = G_{23} \\ Q_{22} &= E_{22}(1 - \nu_{31}\nu_{13})/\Delta \ ; \ Q_{55} = G_{13} \\ Q_{33} &= E_{11}(1 - \nu_{12}\nu_{21})/\Delta \ ; \ Q_{66} = G_{12} \\ Q_{12} &= (\nu_{21} + \nu_{31}\nu_{23})E_{11}/\Delta = (\nu_{12} + \nu_{32}\nu_{13})E_{22}/\Delta \\ Q_{13} &= (\nu_{31} + \nu_{21}\nu_{32})E_{11}/\Delta = (\nu_{13} + \nu_{12}\nu_{23})E_{33}/\Delta \\ Q_{23} &= (\nu_{32} + \nu_{12}\nu_{31})E_{22}/\Delta = (\nu_{23} + \nu_{21}\nu_{13})E_{33}/\Delta \\ \Delta &= 1 - \nu_{12}\nu_{21} - \nu_{23}\nu_{32} - \nu_{31}\nu_{13} - 2\nu_{21}\nu_{32}\nu_{13} \end{aligned} \tag{3.10}$$

where E_{ij} ,G_{ij} and ν_{ij} are, respectively, Young's moduli of elasticity in the principal directions, rigidity moduli which characterize the change of angle between the principal

directions, and the Poisson ratios which characterize the transverse contraction (expansion) under tension (compression) in the directions of the coordinate axes.

The stress-strain relations of the K_{th} lamina in the laminate coordinate axes (x,y,z global coordinates) can be written as (Figure 3.4a):

$$\{\bar{\sigma}\} = \begin{Bmatrix} \sigma_x \\ \sigma_\theta \\ \sigma_n \\ \tau_{\theta n} \\ \tau_{xn} \\ \tau_{x\theta} \end{Bmatrix} = \begin{vmatrix} \overline{Q_{11}} & \overline{Q_{12}} & \overline{Q_{13}} & 0 & 0 & 2\overline{Q_{16}} \\ \overline{Q_{21}} & \overline{Q_{22}} & \overline{Q_{26}} & 0 & 0 & 2\overline{Q_{26}} \\ \overline{Q_{31}} & \overline{Q_{32}} & \overline{Q_{33}} & 0 & 0 & 2\overline{Q_{36}} \\ 0 & 0 & 0 & 2\overline{Q_{44}} & 2\overline{Q_{45}} & 0 \\ 0 & 0 & 0 & 2\overline{Q_{54}} & 2\overline{Q_{55}} & 0 \\ \overline{Q_{16}} & \overline{Q_{26}} & \overline{Q_{16}} & 0 & 0 & 2\overline{Q_{66}} \end{vmatrix} \begin{Bmatrix} \varepsilon_x \\ \varepsilon_\theta \\ \varepsilon_n \\ \gamma_{\theta n} \\ \gamma_{xn} \\ \gamma_{x\theta} \end{Bmatrix} \tag{3.11}$$

where :

$$\left[\overline{Q}\right] = [T]^{-1}[Q][T] \tag{3.12}$$

The transformation matrix [T] is defined by:

$$[T]=\begin{bmatrix} m^2 & n^2 & 0 & 0 & 0 & 2mn \\ n^2 & m^2 & 0 & 0 & 0 & -2mn \\ 0 & 0 & 1 & 0 & 0 & 0 \\ 0 & 0 & 0 & m & -n & 0 \\ 0 & 0 & 0 & n & m & 0 \\ -mn & mn & 0 & 0 & 0 & (m^2-n^2) \end{bmatrix} \tag{3.13}$$

where: $m \equiv \cos\alpha$, $n \equiv \sin\alpha$

The orientation angle α is measured counter-clockwise from the x-axis to the 1-axis (Figure 3.4b). The $[\overline{Q}]$'s elements are defined as follows:

$$\begin{gathered}
\overline{Q'_{ij}}\ s\ \ elements: \\
\overline{Q_{11}}=Q_{11}m^4+2(Q_{12}+2Q_{66})m^2n^2+Q_{22}n^4 \quad ; \quad \overline{Q_{22}}=Q_{11}n^4+2(Q_{12}+2Q_{66})m^2n^2+Q_{22}m^4 \\
\overline{Q_{12}}=(Q_{11}+Q_{22}-4Q_{66})m^2n^2+Q_{12}(m^4+n^4) \quad ; \quad \overline{Q_{23}}=Q_{13}n^2+Q_{23}m^2 \\
\overline{Q_{13}}=Q_{13}m^2+Q_{23}n^2 \quad ; \quad \overline{Q_{26}}=-m^3nQ_{22}+mn^3Q_{11}+mn(m^2-n^2)(Q_{12}+2Q_{66}) \\
\overline{Q_{16}}=-mn^3Q_{22}+m^3nQ_{11}-mn(m^2-n^2)(Q_{12}+2Q_{66}) \quad . \quad \overline{Q_{66}}=(Q_{11}+Q_{22}-2Q_{12})m^2n^2+Q_{66}(m^2-n^2)^2 \\
\overline{Q_{33}}=Q_{33} \\
\overline{Q_{36}}=(Q_{13}-Q_{23})mn \quad ; \quad \overline{Q_{45}}=(Q_{55}-Q_{44})mn \\
\overline{Q_{44}}=Q_{44}m^2+Q_{55}n^2 \quad ; \quad \overline{Q_{55}}=Q_{55}m^2+Q_{44}n^2
\end{gathered} \tag{3.14}$$

3.4 Fundamental Equations for Open Cylindrical Shells

3.4.1 The Equations of Motion

Whenever a new theory based on assumed displacements is developed, the governing equilibrium equations should be derived by using one of the existing methods. We use the virtual displacements principle. The circular cylindrical shell geometry and the differential

element studied, as well as the coordinates used, are shown in (Figure 3.5). The equations of motion are:

$$
\begin{aligned}
&\frac{\partial N_{xx}}{\partial x}+\frac{1}{R}\frac{\partial N_{\theta x}}{\partial \theta}-\frac{1}{R^2}\frac{\partial M_{\theta x}}{\partial \theta}+q_x=I_1\ddot{u}_x+I_2\ddot{\beta}_x \\
&\frac{\partial N_{x\theta}}{\partial x}+\frac{1}{R}\frac{\partial N_{\theta\theta}}{\partial \theta}+\frac{Q_{\theta\theta}}{R}+\frac{1}{2R}\frac{\partial M_{x\theta}}{\partial x}+q_\theta=I_1\ddot{u}_\theta+I_2\ddot{\beta}_\theta \\
&\frac{\partial Q_{xx}}{\partial x}+\frac{1}{R}\frac{\partial Q_{\theta\theta}}{\partial \theta}-\frac{N_{\theta\theta}}{R}+q_n=I_1\ddot{w} \\
&\frac{\partial M_{xx}}{\partial x}+\frac{1}{R}\frac{\partial M_{\theta x}}{\partial \theta}-Q_{xx}=I_2\ddot{u}_x+I_3\ddot{\beta}_x \\
&\frac{1}{R}\frac{\partial M_{\theta\theta}}{\partial \theta}+\frac{\partial M_{x\theta}}{\partial x}-Q_{\theta\theta}=I_2\ddot{u}_\theta+I_3\ddot{\beta}_\theta
\end{aligned}
\tag{3.15}
$$

where :

$$
I_1,I_2,I_3=\sum_{k=1}^{N}\int_{h_k}^{h_{k+1}}\rho^{(k)}(1,\xi,\xi^2)d\xi \tag{3.16}
$$

where I_i , $\rho^{(k)}$ and ξ are, respectively, the inertia moments, the density of the lamina material and the thickness coordinate.

It can be seen that there are five independent boundary conditions to be applied at given edges. The transverse shear deformations do not vanish in the present theory and, therefore, the β_i cannot be expressed in terms of U_i and W. The transverse shear theory recommended here leads to no strains during rigid body motion.

3.4.2 The Stress Resultants and Stress Couples The stress resultants and stress couples are given by:

$$\begin{Bmatrix} N_{xx} \\ N_{x\theta} \\ Q_{xx} \end{Bmatrix} = \int_{\xi} \begin{Bmatrix} \sigma_x \\ \tau_{x\theta} \\ \tau_{xn} \end{Bmatrix} (1+\xi/R_\theta)\, d\xi \quad ; \quad \begin{Bmatrix} N_{\theta\theta} \\ N_{\theta x} \\ Q_{\theta\theta} \end{Bmatrix} = \int_{\xi} \begin{Bmatrix} \sigma_\theta \\ \tau_{\theta x} \\ \tau_{\theta n} \end{Bmatrix} (1+\xi/R_\varphi)\, d\xi$$

$$\begin{Bmatrix} M_{xx} \\ M_{x\theta} \end{Bmatrix} = \int_{\xi} \begin{Bmatrix} \sigma_x \\ \tau_{x\theta} \end{Bmatrix} (1+\xi/R_\theta)\, d\xi \quad ; \quad \begin{Bmatrix} M_{\theta\theta} \\ M_{\theta x} \end{Bmatrix} = \int_{\xi} \begin{Bmatrix} \sigma_\theta \\ \tau_{\theta x} \end{Bmatrix} (1+\xi/R_\varphi)\, d\xi \tag{3.17}$$

The quantities (N_{xx}, $N_{\theta\theta}$, $N_{x\theta}$, $N_{\theta x}$) are called the *in-plane force resultants*, (M_{xx}, $M_{\theta\theta}$, $M_{x\theta}$, $M_{\theta x}$) are called the *moment resultants* and (Q_{xx}, $Q_{\theta\theta}$) denote the *transverse force resultants*. We notice, in equations (3.17), that the symmetry of the stress tensor ($\tau_{x\theta} = \tau_{\theta x}$) does not necessarily imply that $N_{x\theta}$ and $N_{\theta x}$ are equal or that $M_{x\theta}$ and $M_{\theta x}$ are equal except in the case of a spherical shell, a flat plate or a thin shell of any shape.

3.4.3 The Constitutive Equations

The stress resultants and stress couples that correspond to the remaining stress are given by equations (3.17), so, using equations (3.5), (3.11) and (3.17) we have:

$$\begin{Bmatrix} N_{xx} \\ N_{x\theta} \\ N_{\theta\theta} \\ N_{\theta x} \end{Bmatrix} = \underset{(4\times 4)}{\begin{bmatrix} A_{ij}+B_{ij}/R & A_{ij}+B_{ij}/R \\ A_{ij} & A_{ij} \end{bmatrix}} \begin{Bmatrix} \varepsilon_x \\ \gamma^o_x \\ \varepsilon^o_\theta \\ \gamma^o_\theta \end{Bmatrix} + \underset{(4\times 4)}{\begin{bmatrix} B_{ij}+D_{ij}/R & B_{ij}+D_{ij}/R \\ B_{ij} & B_{ij} \end{bmatrix}} \begin{Bmatrix} \kappa_x \\ \tau_x \\ \kappa_\theta \\ \tau_\theta \end{Bmatrix} \qquad i,j=1,6,2,6 \tag{3.18}$$

$$\begin{Bmatrix} M_{xx} \\ M_{x\theta} \\ M_{\theta\theta} \\ M_{\theta x} \end{Bmatrix} = \underset{(4\times4)}{\begin{bmatrix} B_{ij}+D_{ij}/R & B_{ij}+D_{ij}/R \\ B_{ij} & B_{ij} \end{bmatrix}} \begin{Bmatrix} \varepsilon^{o}_{x} \\ \gamma^{o}_{x} \\ \varepsilon^{o}_{\theta} \\ \gamma^{o}_{\theta} \end{Bmatrix} + \underset{(4\times4)}{\begin{bmatrix} D_{ij}+E_{ij}/R & D_{ij}+E_{ij}/R \\ D_{ij} & D_{ij} \end{bmatrix}} \begin{Bmatrix} \kappa_{x} \\ \tau_{x} \\ \kappa_{\theta} \\ \tau_{\theta} \end{Bmatrix} \qquad i,j=1,6,2,6 \tag{3.19}$$

Note : $Nx\theta \neq N\theta x$ and $Mx\theta \neq M\theta x$

where:

$$\begin{aligned} A_{ij} &= \sum_{k=1}^{N} (\overline{Q_{ij}})_k (h_k - h_{k-1}) \\ B_{ij} &= \frac{1}{2}\sum_{k=1}^{N} (\overline{Q_{ij}})_k (h^2{}_k - h^2{}_{k-1}) \qquad i,j=1,6,2,6 \\ D_{ij} &= \frac{1}{3}\sum_{k=1}^{N} (\overline{Q_{ij}})_k (h^3{}_k - h^3{}_{k-1}) \\ E_{ij} &= \frac{1}{4}\sum_{k=1}^{N} (\overline{Q_{ij}})_k (h_k^4 - h^4{}_{k-1}) \end{aligned} \tag{3.20}$$

The *[A]* and *[D]* are the extensional and flexural stiffness matrices, which relate the in-plane stress resultant (*N*) to the mid-surface strains and the stress couples (*M*) to the curvatures.

The *[B]* is the bending-stretching coupling matrix. It should be noted that a laminated structure can have the bending-stretching coupling even if all laminae are isotropic. All of the B_{ij} components can be equal to zero if and only if the structure is exactly symmetrical about its middle surface.

We also have:

$$\begin{Bmatrix} Q_{xx} \\ Q_{\theta\theta} \end{Bmatrix} = \begin{bmatrix} 2(A_{55}+B_{55}/R) & 2(A_{54}+B_{54}/R) \\ 2A_{45} & 2A_{44} \end{bmatrix} \begin{Bmatrix} \mu^o{}_x \\ \mu^o{}_\theta \end{Bmatrix} \tag{3.21}$$

where:

$$\begin{aligned} A_{\alpha\beta} &= \sum_{k=1}^{N} (\overline{Q_{\alpha\beta}})_k (h_k - h_{k-1}) \\ B_{\alpha\beta} &= \frac{1}{2} \sum_{k=1}^{N} (\overline{Q_{\alpha\beta}})_k (h^2{}_k - h^2{}_{k-1}) \end{aligned} \qquad \alpha,\beta = 4,5 \tag{3.22}$$

Finally:

$$\begin{Bmatrix} N_{xx} \\ N_{x\theta} \\ Q_{xx} \\ N_{\theta\theta} \\ N_{\theta x} \\ Q_{\theta\theta} \\ M_{xx} \\ M_{x\theta} \\ M_{\theta\theta} \\ M_{\theta x} \end{Bmatrix} = [P] \begin{Bmatrix} \varepsilon^o{}_x \\ \gamma^o{}_x \\ \mu^o{}_x \\ \varepsilon^o{}_\theta \\ \gamma^o{}_\theta \\ \mu^o{}_\theta \\ \kappa_x \\ \tau_x \\ \kappa_\theta \\ \tau_\theta \end{Bmatrix} = [P]_{(10\times10)} \begin{Bmatrix} \dfrac{\partial u_x}{\partial x} \\ \dfrac{\partial u_\theta}{\partial x} \\ \dfrac{\partial w}{\partial x} + \beta_x \\ \dfrac{1}{R}\dfrac{\partial u_\theta}{\partial \theta} + \dfrac{w}{R} \\ \dfrac{1}{R}\dfrac{\partial u_x}{\partial \theta} \\ \dfrac{1}{R}\dfrac{\partial w}{\partial \theta} - \dfrac{u_\theta}{R} + \beta_\theta \\ \dfrac{\partial \beta_x}{\partial x} \\ \dfrac{\partial \beta_\theta}{\partial x} + \dfrac{1}{2R}\dfrac{\partial u_\theta}{\partial x} \\ \dfrac{1}{R}\dfrac{\partial \beta_\theta}{\partial \theta} \\ \dfrac{1}{R}\dfrac{\partial \beta_x}{\partial \theta} - \dfrac{1}{2R^2}\dfrac{\partial u_x}{\partial \theta} \end{Bmatrix}_{(10\times1)} \tag{3.23}$$

The ε^{o}_{x}, γ^{o}_{x} ..., and τ_{θ} were given earlier in equation (3.6). The elasticity matrix [P] given in equation (3.23) can be applied to shells consisting of a single or an arbitrary number of isotropic, quasi-isotropic and orthotropic layers. In the case of an arbitrary number of orthotropic layers, we assume that these layers function concurrently without slippage. The *[P]* matrix is given in the Appendix A-3.

3.5 The Displacement Functions

In the continuum, we express U, V, W, β_x and β_θ of the mean surface of the shell by:

$$\begin{Bmatrix} U(x,\theta) \\ V(x,\theta) \\ W(x,\theta) \\ \beta_x(x,\theta) \\ \beta_\theta(x,\theta) \end{Bmatrix} = \sum_{p=1}^{10} \begin{bmatrix} Cos\bar{m}x & 0 & 0 & 0 & 0 \\ 0 & Sin\bar{m}x & 0 & 0 & 0 \\ 0 & 0 & Sin\bar{m}x & 0 & 0 \\ 0 & 0 & 0 & Cos\bar{m}x & 0 \\ 0 & 0 & 0 & 0 & Sin\bar{m}x \end{bmatrix} \begin{Bmatrix} u_p(\theta) \\ v_p(\theta) \\ w_p(\theta) \\ \beta_{x_p}(\theta) \\ \beta_{\theta_p}(\theta) \end{Bmatrix} = \sum_{p=1}^{10} [T_1] \begin{Bmatrix} A_p e^{\eta_p \theta} \\ B_p e^{\eta_p \theta} \\ C_p e^{\eta_p \theta} \\ D_p e^{\eta_p \theta} \\ E_p e^{\eta_p \theta} \end{Bmatrix} \tag{3.24}$$

where:

$$\bar{m} = \frac{m\pi}{L}$$

where m is the longitudinal wave number. We substitute equations (3.23) into the equations of motion (3.15), and obtain the five linear differential operators Li(i=1,2,...,5). These equations, in which the shear deformation effects and inertia terms as well as the initial curvature are included, are given in the Appendix A-3.

$$
\begin{aligned}
&L_1(U,V,W,\beta_x,\beta_\theta,\overline{P}_{ij})=0.\\
&L_2(U,V,W,\beta_x,\beta_\theta,\overline{P}_{ij})=0.\\
&L_3(U,V,W,\beta_x,\beta_\theta,\overline{P}_{ij})=0.\\
&L_4(U,V,W,\beta_x,\beta_\theta,\overline{P}_{ij})=0.\\
&L_5(U,V,W,\beta_x,\beta_\theta,\overline{P}_{ij})=0.
\end{aligned}
\tag{3.25}
$$

We substitute equations (3.24) into the equations of motion (3.25), and obtain:

$$
[H]_{(5\times5)}\begin{Bmatrix} A\\ B\\ C\\ D\\ E\end{Bmatrix}_{(5\times1)} = \begin{Bmatrix} 0\\ 0\\ 0\\ 0\\ 0\end{Bmatrix}_{(5\times1)}
\tag{3.26}
$$

For the non-trivial solution, the determinant of matrix *[H]* must vanish. This brings us to the following polynomial equation (characteristic equation):

$$
Det([H]) = f_{10}\eta^{10} + f_8\eta^8 + f_6\eta^6 + f_4\eta^4 + f_2\eta^2 + f_0
\tag{3.27}
$$

where f_i (i=0 to 10) are coefficients of the determinant of the equation of motion *[H]* given in the Appendix A-3. Each root of this equation yields a solution to the equation of motion. The complete solution is obtained by the sum of all ten independent solutions with

the constants A_p, B_p, C_p, D_p and E_p so that:

$$\begin{aligned} u(x) &= A_p e^{\eta\theta} \\ v(x) &= B_p e^{\eta\theta} \\ w(x) &= C_p e^{\eta\theta} \\ \beta_x(x) &= D_p e^{\eta\theta} \\ \beta_\theta(x) &= E_p e^{\eta\theta} \end{aligned} \qquad p=1,\ldots,10 \tag{3.28}$$

The constants A_p, B_p, C_p, D_p and E_p are dependent; we can therefore express these constants as a function of C_p:

$$A_p=\alpha_p C_p\,, B_p=\beta_p C_p\,, D_p=\gamma_p C_p\,, E_p=\delta_p C_p \qquad (p=1,2,..,10) \tag{3.29}$$

The values of α_p,β_p,γ_p and δ_p can be obtained from the following relations:

$$\begin{bmatrix} H_{11} & H_{12} & H_{14} & H_{15} \\ H_{21} & H_{22} & H_{24} & H_{25} \\ H_{41} & H_{42} & H_{44} & H_{45} \\ H_{51} & H_{52} & H_{54} & H_{55} \end{bmatrix} \begin{Bmatrix} \alpha_p \\ \beta_p \\ \gamma_p \\ \delta_p \end{Bmatrix} = \begin{Bmatrix} -H_{13} \\ -H_{23} \\ -H_{43} \\ -H_{53} \end{Bmatrix} \tag{3.30}$$

The elements of matrix *[H]* are given in the Appendix A-3. The displacements $U(x,\theta)$, $V(x,\theta)$ and $W(x,\theta)$ as well as $\beta_x(x,\theta)$ and $\beta_\theta(x,\theta)$ can then be expressed in conjunction with the ten C_p constants only. We then have:

$$\begin{Bmatrix} U(x,\theta) \\ V(x,\theta) \\ W(x,\theta) \\ \beta_x(x,\theta) \\ \beta_\theta(x,\theta) \end{Bmatrix} = \left[T_1\right]_{(5\times5)} \left[\overline{R}\right]_{(5\times10)} \{C\}_{(10\times1)} \tag{3.31}$$

where $\{C\}$ is the tenth order vector of the constants' C_p.

$$\{C\} = \{C_1,\ldots,C_{10}\}^T \tag{3.32}$$

Setting $\left[\overline{R}\right]$ =[LL] [X], equation (3.31) becomes:

$$\begin{Bmatrix} U(x,\theta) \\ V(x,\theta) \\ W(x,\theta) \\ \beta_x(x,\theta) \\ \beta_\theta(x,\theta) \end{Bmatrix} = \underset{(5\times5)}{\left[T_1\right]} \underset{(5\times10)}{[LL]} \underset{(10\times10)}{[X]} \underset{(10\times1)}{\{C\}} \tag{3.33}$$

where the [LL] and [X] matrices are given in the Appendix A-3. To determine the ten C_p constants, it is necessary to formulate ten boundary conditions for the finite elements, the axial, tangential and radial displacements as well as the rotations will be specified for each node. The degree of freedom at nodal line i can be defined by the vector:

$$\{\delta_i\} = \{u_i \;\; v_i \;\; w_i \;\; \alpha_i \;\; \beta_i\}^T \tag{3.34}$$

The elements, which have two nodal lines and ten degrees of freedom, will have (*i*, $\theta=0$) and (*j*, $\theta=\varphi$) as nodal displacements at the boundaries:

$$\begin{Bmatrix} \delta_i \\ \delta_j \end{Bmatrix} = \{ U_i \;\; V_i \;\; W_i \;\; \beta_{x_i} \;\; \beta_{\theta_i} \;\; U_j \;\; V_j \;\; W_j \;\; \beta_{x_j} \;\; \beta_{\theta_j} \}^T = [A]_{(10\times10)} \{C\}_{(10\times1)} \tag{3.35}$$

Simply Supported : $v = w = \varphi_2 = N_1 = M_1 = 0.$

Clamped : $u = v = w = \varphi_1 = \varphi_2 = 0.$

Free : $N_1 = M_1 = Q_1 = N_6 = M_6 = 0.$

where the [A] matrix terms are obtained from matrix [R] by successively setting $\theta=0$ and $\theta=\varphi$. Multiplying equation (3.35) by $[A]^{-1}$ we obtain:

$$\{C\} = [A]^{-1} \begin{Bmatrix} \delta_i \\ \delta_j \end{Bmatrix} \tag{3.36}$$

where [A] is given in the Appendix A-3. Substituting for equation (3.33) we get:

$$\begin{Bmatrix} U(x,\theta) \\ V(x,\theta) \\ W(x,\theta) \\ \beta_x(x,\theta) \\ \beta_\theta(x,\theta) \end{Bmatrix} = \left[T_1\right]\left[LL\right]\left[X\right]\left[A\right]^{-1}\begin{Bmatrix} \delta_i \\ \delta_j \end{Bmatrix} = \left[N\right]\begin{Bmatrix} \delta_i \\ \delta_j \end{Bmatrix} \tag{3.37}$$

These equations determine the displacement functions.

3.6 Determination of Mass and Stiffness Matrices for an Element

The strain vector may be found by using equations (3.5) and (3.37):

$$\{\varepsilon\} = \begin{bmatrix} \left[T_1\right] & 0 \\ 0 & \left[T_1\right] \end{bmatrix}\left[QQ\right]\left[A\right]^{-1}\begin{Bmatrix} \delta_i \\ \delta_j \end{Bmatrix} \tag{3.38}$$

Assume that [QQ]=[J][X], therefore equation (3.38) becomes:

$$\{\varepsilon\} = \left[T\right]_{(10\times 10)}\left[J\right]_{(10\times 10)}\left[X\right]_{(10\times 10)}\left[A\right]^{-1}{}_{(10\times 10)}\begin{Bmatrix} \delta_i \\ \delta_j \end{Bmatrix}_{(10\times 1)} = \left[BB\right]\begin{Bmatrix} \delta_i \\ \delta_j \end{Bmatrix} \tag{3.39}$$

The matrices of [T] and [QQ] are given in Appendix A-3 . Combining equations (3.7) and (3.39), the stress-strain relations, can be written as:

$$\{\sigma\} = \left[P\right]\left[BB\right]\begin{Bmatrix} \delta_i \\ \delta_j \end{Bmatrix} \tag{3.40}$$

The mass matrix can be expressed as:

$$[m] = \rho t \int_0^L \int_0^\varphi [N]^T [N] dA \tag{3.41}$$

where $dA = Rdx\, d\theta$. Or

$$[m] = \rho t \int_0^L \int_0^\varphi [A^{-1}]^T \left\{ [\overline{R}]^T [T_1]^T [T_1] [\overline{R}] \right\} [A^{-1}] r\, dx\, d\theta \tag{3.42}$$

Using equation (3.37), equation (3.42), after integration with respect to x and θ, over the interval, becomes:

$$[m] = \rho t [A^{-1}]^T [S] [A^{-1}] \tag{3.43}$$

where:

$$\begin{aligned} S(i,j) &= \frac{RL}{2} \left[\frac{\alpha_i \alpha_j + \beta_i \beta_j + 1 + \gamma_i \gamma_j + \delta_i \delta_j}{(\eta_i + \eta_j)} \right] \left[e^{(\eta_i + \eta_j)\varphi} - 1 \right] \quad if \quad \eta_i + \eta_j \neq 0 \\ S(i,j) &= \frac{RL\varphi}{2} \left(\alpha_i \alpha_j + \beta_i \beta_j + 1 + \gamma_i \gamma_j + \delta_i \delta_j \right) \quad if \quad \eta_i + \eta_j = 0 \end{aligned} \tag{3.44}$$

The stiffness matrix can be expressed as:

$$[k]=\int_0^L\int_0^\varphi \left[A^{-1}\right]^T\left\{[Q]^T[T]^T[P][T][Q]\right\}\left[A^{-1}\right] r\,dx\,d\theta \tag{3.45}$$

after integration, we obtain:

$$\left[k\right]=\left[A^{-1}\right]^T\left[G\right]\left[A^{-1}\right] \tag{3.46}$$

The G_{ij}'s general element is defined as:

$$\begin{aligned}
G(i,j)=\frac{RL}{2}[&P_{11}A_iA_j+P_{14}A_iD_j+P_{17}A_iG_j+P_{19}A_iI_j+\\
&P_{22}B_iB_j+P_{25}B_iE_j+P_{28}B_iH_j+P_{210}B_iJ_j+\\
&P_{33}C_iC_j+\\
&P_{41}D_iA_j+P_{44}D_iD_j+P_{47}D_iG_j+P_{49}D_iI_j+\\
&P_{52}E_iB_j+P_{55}E_iE_j+P_{58}E_iH_j+P_{510}E_iJ_j+\\
&P_{66}F_iF_j+\\
&P_{71}G_iA_j+P_{74}G_iD_j+P_{77}G_iG_j+P_{79}G_iI_j+\\
&P_{82}H_iB_j+P_{85}H_iE_j+P_{88}H_iH_j+P_{810}H_iJ_j+\\
&P_{91}I_iA_j+P_{94}I_iD_j+P_{97}I_iG_j+P_{99}I_iI_j+\\
&P_{102}J_iB_j+P_{105}J_iE_j+P_{108}J_iH_j+P_{1010}J_iJ_j]\\
&\times\left\{\frac{1}{(\eta_i+\eta_j)}\left(e^{(\eta_i+\eta_j)\varphi}-1\right)\right\} \qquad \textit{if}\quad \eta_i+\eta_j\neq 0
\end{aligned} \tag{3.47}$$

$$G(i,j)=\frac{RL\varphi}{2}[P_{11}A_iA_j+P_{14}A_iD_j+\cdots+P_{108}J_iH_j+P_{1010}J_iJ_j] \qquad \textit{if}\quad \eta_i+\eta_j=0$$

The [G] and [S] matrices were obtained analytically by carrying out the necessary matrix operations and integration over x and θ in equations (3.42) and (3.45). To do this it was found necessary to introduce several intermediate matrices, eventually obtaining expressions for the general terms k_{ij} and m_{ij} of [k] and [m], respectively. Because of the complexity of the manipulations, only the final results are given here. The A_i, B_i, C_i , ..., J_i components are given by [J] matrix.

3.7 Stiffness and Mass Matrices for the Whole Shell in Vacuo

As previously mentioned, the complete shell is divided into finite elements each of which is a cylindrical panel segment (Figure 3.6b). The global mass *[M]* and stiffness *[K]* matrices for the whole structure can be constructed whenever the mass *[m]* and stiffness matrices *[k]* for each element are obtained.

Each of these matrices (*[M]*& *[K]*) are of order $5(N+1)-J$ where N is the total number of finite elements (Figure 3.6a) and J is the number of constraints applied.

The vectors $\{F_i\}$, $\{F_j\}$ represent the internal forces acting at nodes i and j, respectively, and $\{\delta i\}$ are the corresponding displacements. As the shell is continuous, the sum of forces and moments at a particular node must be equal to external forces and moments applied at the node. Thus,

$$\{F\}^e = \{F_j\} + \{F_{i+1}\} \tag{3.48}$$

Morever, the displacement must be continuous, and

$$\{\delta_j\} = \{\delta_{i+1}\} \tag{3.49}$$

These relationships allow us to superimpose the mass and stiffness matrices of individual finite elements in order to obtain the global mass and stiffness matrices *[M]* and *[K]* for the whole shell in vacuo. The *[K]* and *[M]* matrices will be square matrices of order $5(N+1)$, where N is the number of finite elements.

3.8 Free Vibration

For free vibration, the equation of motion may be written in the form :

$$[M]\{\ddot{\Delta}\} + [K]\{\Delta\} = 0. \tag{3.50}$$

where $[\Delta] = \{\delta_1, \delta_2, ..., \delta_{N+1}\}^T$, N is the number of finite elements, *[M]* and *[K]* are real, symmetric matrices of order $5(N+1) \times 5(N+1)$, and $\{\delta_{N+1}\}$ is the displacement vector associated with the lower edge of the last finite element. In the case where the shell has rigid edge constraints, the kinematic boundary conditions must be taken into account. Accordingly, *[K]* and *[M]* are reduced to square matrices of order $5(N+1)-J$, where J is the number of the constraint equations imposed.

The solution of equation (3.50) now follows by standard matrix techniques, yielding the natural frequencies, ω_i $i=1, 2, ..., 5(N+1)-J$ and the corresponding eigenvectors. It must be stressed that the mass and stiffness matrices obtained are associated with a specific axial wave number, m, as is the nodal displacement vector. Thus the analysis is carried out independently for each m.

3.9 Calculations and Discussion

As a numerical example, the non-dimensional fundamental frequencies of vibration for simply-supported shell boundary conditions were computed for a four cross-ply layered (0°/90°/90°/0°) cylindrical shell. All layers are assumed to be of the same geometric and material parameters and the individual layer is assumed to be orthotropic. The following material properties are used:

$$E_1=25E_2 \; ; \; G_{23}=0.2E_2 \; ; \; G_{13}=G_{12}=0.5E_2 \; ; \; \nu_{12}=0.25 \; ; \; \rho=1$$

These results were compared with those of [Sciuva and Carrera 1992] to demonstrate the accuracy and range of applicability of the present theory. Also a comparison with Sanders' theory (Hybrid Finite Element "HFE" method) [Selmane and Lakis 1997] is given to illustrate the effect of transverse shear deformation. The results are shown in Table (3.1) for various length-to-radius ratios and for three radius-to-thickness ratios.

The radius-to-thickness and the length-to-radius ratio effects are studied through this

example table (3.1). Comparison of the SDT (shear deformation theory) results with those of CST show that the shear deformation effect is significant for a length-to-radius ratio smaller than **1.0** for all ratios of ***R/t***. For example, the solution reached by applying classical theory differs from that reached by SDT by 2% for ***L/R***=50; 7% for ***L/R***=1.0 and from 18% to up to 30% for ***L/R*** <= 0.1. All laminae which are used henceforth have the same properties as those of the first example.

In the following examples we study the effect of the axial mode (***m***) on the non-dimensional natural frequencies of cylindrical shells for different materials and geometry parameters. The graph showing different longitudinal vibration modes as a function of the circumferential wave number (***n***) are shown in figures (3.7-3.10). The first two figures (3.7 and 3.8) show results for four symmetric layer cross-ply (0°/90°/90°/0°) laminated shells whose mechanical properties are the same as those of the shell in the previous example, but their radius-to-thickness ratios are different (R/t=50,100).

These graphs show reasonable agreement between the hybrid finite element (HFE) method [Selmane and Lakis 1997] and the present theory for ***m=1*** (about 4% difference). As can be seen, the influence of transverse shear deformation on the natural frequencies increases with increasing ***m***. One may observe that the gap between the two theories increases as the axial mode (***m***) is increased and the radius-to-thickness ratio is decreased to a fixed value of ***L/R***.

The mechanical parameters of the shell of the third example (figure 3.9) are listed in Table (3.2). The interface is taken as the reference surface. It should be noted that, in this example, the laminate structure is composed of one lamina of steel and another of orthotropic material, so that all of the B_{ij} components (the extension-bending, coupling, stiffness matrix) are not equal to zero, which means that the bending-stretching, coupling, and stiffness components are present. The results obtained are compared with those of existing classical shell theories.

The last example of this series (Figure 3.10) is made for isotropic material. In this graph, the natural frequencies are shown for longitudinal modes (m=1,3 and 5). It can be seen that, as expected, the frequencies are much closer for small values of m and n than for their large values in comparison with results obtained from Sanders' theory (Selmane & Lakis [40]) .

The next two examples deal with the shear deformation effect on the natural frequencies of isotropic cylindrical shells for various values of the radius-to-thickness ratio. In the first (Figure 3.11), the non-dimensional natural frequencies are shown as a function of the circumferential wave number (n) for three different values of R/t and the fixed value of L/R and m. As can be seen, the transverse shear deformation causes the remarkable difference in the natural frequencies obtained from two theories (present theory and Sanders' theory) for $R/t < 50$ and for values of n.

The variation of vibration parameter (Ω) of isotropic cylindrical shells with the radius-to-thickness ratio ***R/t*** is shown in (Figure 3.12) for two different values of axial mode number (***m***=2,3), fixed values of ***L/R***, and circumferential wave number (***n***). This graph shows a greater difference between the results for $R/t \leq 25$ than for $R/t > 25$.

The variation of non-dimensional frequencies (Ω) as a function of the length-to-radius ratio ***L/R*** of isotropic and laminated anisotropic (having different symmetric 0°/90°/0°, 0°/90°/90°/0° and anti-symmetric 0°/90° lay-outs) are shown in (Figures 3.13-3.18). The effects of different values of ***R/t***, ***L/t*** and axial mode numbers (***m***) are shown in these graphs.

Figure (3.13) is drawn for an isotropic shell showing the non-dimensional frequency variations as a function of the ***L/R*** ratio and for different longitudinal vibration modes (***m***=1,3,5). Figure (3.14) shows the non-dimensional natural frequencies of a cross-ply cylindrical shell for the symmetric lamination scheme (0°/90°/0°), for two different ratios of ***L/t***.

Figure (3.15) compares the results obtained from two theories (present theory and Sanders' theory [40]) for a anti-symmetric cross-ply cylindrical shell for different values of ***L/R*** and axial mode numbers (m=1,2,3,5). The same study (Figure 3.18) was made for a symmetric cross-ply (0°/90°/90°/0°) cylindrical shell. In order to show clearly the difference between the results obtained from the two theories even for ***m***=1, Figure (3.15) is replotted separately for ***m***=1(Figure 3.16) and ***m***=5 (Figure 3.17). For the length-to-radius ratio ***L/R***

<10 and high numbers of (***m***), there are always relatively large differences between the non-dimensional frequencies obtained from two different theories (present theory and Sanders' theory [40]).

Figure (3.19) shows the non-dimensional fundamental natural frequencies (m=1) of cross-ply cylindrical shells for the symmetric lamination scheme (0°/90°/0°), for various different ratios of ***L/R***, and for two values of ***L/t*** (L/t=10 & L/t=100). Through this example (figure 3.19), a thickness study was carried out to determine the effect of transverse shear deformation. The thickness of the shell ***t*** was varied while ***L*** and ***R*** were kept constant. The geometries and material parameters as the same as in example *1* . The layers are of equal thickness.

This figure (3.19) compares the results obtained from this theory with corresponding results given in references [Reddy 1984, Selmane and Lakis 1997, Sciuva and Carrera 1992]. The present results are always lower than the corresponding tabulated results of references [Reddy 1984, Reddy and Liu 1985, Sciuva and Carrera 1992]. However, some remarks should be made about these results.As can be seen, the frequencies of symmetrically laminated shells for ***L/t***=10 are less sensitive to R/L variations than those of thin shells ***L/t***=100. Classical shell theory over-predicts, while the SDT under- estimates the frequencies even for very thin shells.

Figures (3.20-3.23) show the non-dimensional frequencies of isotropic cylindrical

shells vs. the thickness-to-radius ratio for three different radius-to-length ratios ($\lambda=m\pi R/L$) ($m=1$, $n=1,2,3,4$). The results obtained from this work are shown along with those from other theories [Ref. 3, 44]. There is good agreement between the results from this theory and those of reference [Bhimaraddi 1984]. In general, classical shell theory is seen to over-predict the natural frequencies when compared to the shear deformation theory. The error increases as values of n, R/L and t/R increase for a fixed value of **m**.

The two last examples involve the determination of the natural frequencies of an open cylindrical shell. Figure (3.24) shows the effect of variation of the length-to-radius ratio on the frequency parameters of an anisotropic (0°/90°/90°/0°) open cylindrical shell having both its straight and curved edges freely simply supported. Figure (3.25) is drawn for an isotropic open cylindrical shell having its straight edges clamped and the curved edges freely simply supported. The data are provided with the figures.

3.10 Conclusion

A particular method has been developed to determine the natural frequencies and the corresponding mode of vibrations for anisotropic, laminated and non-uniform, closed and open cylindrical shells by taking into account the shear deformation effect and rotatory inertia as well as the initial curvature. The extensional and bending stiffness as well as the coupling of these two have been taken into account.

The method is a combination of hybrid finite element analysis and shear deformation

theory of shells. It combines the advantage of finite element analysis and the precision of formulation which the use of displacement functions derived from shell theory contributes. The displacement functions for this theory are derived and the mass and stiffness matrices of each element are obtained by exact analytical integration.

Results of classical, hybrid finite element and shear deformation shell theories have been compared with the results of the present solution to emphasise the accuracy of this theory. Numerical results are presented for different materials (isotropic and cross-ply laminated materials having a symmetric and an anti-symmetric lay-up) and parametric studies including circumferential and axial wave number (n ; m); mean radius-to-thickness ratio (R/t); length-to-mean-radius ratio (L/R) and L/t; and the lamination scheme and number of layers are carried out through several numerical examples and results obtained are compared with those of others, with good agreement, and with results obtained from the hybrid finite element method.

In general, classical shell theory over-estimates frequencies compared to the shear deformation theory especially for laminated anisotropic shells. It has been suggested that the reason for the difference is a change in shear angle from layer to layer and the insensitivity of the CST to this change.

The next step in this line of work will deal with liquid-filled open and closed non-uniform, anisotropic cylindrical shells by consideration of the shear deformation, rotatory inertia and initial curvature effects.

3.11 Appendix A-3

This appendix contains the equations of motion for the thin cylindrical anisotropic shell which is referred to in this work:

$$\gamma_{11} = h_1 \frac{\partial u_1}{\partial y_1} + \frac{h_1 u_2}{h_2}\frac{\partial h_1}{\partial y_2} + \frac{h_1 u_3}{h_3}\frac{\partial h_1}{\partial y_3}$$

$$+\frac{1}{2}\left(\frac{\partial u_1}{\partial y_1} + \frac{u_2}{h_2}\frac{\partial h_1}{\partial y_2} + \frac{u_3}{h_3}\frac{\partial h_1}{\partial y_3}\right)^2 + \frac{1}{2}\left(\frac{\partial u_2}{\partial y_1} - \frac{u_1}{h_2}\frac{\partial h_1}{\partial y_2}\right)^2 + \frac{1}{2}\left(\frac{\partial u_3}{\partial y_1} - \frac{u_1}{h_3}\frac{\partial h_1}{\partial y_3}\right)^2$$

$$\gamma_{22} = h_2 \frac{\partial u_2}{\partial y_2} + \frac{h_2 u_3}{h_3}\frac{\partial h_2}{\partial y_3} + \frac{h_2 u_1}{h_1}\frac{\partial h_2}{\partial y_1}$$

$$+\frac{1}{2}\left(\frac{\partial u_2}{\partial y_2} + \frac{u_3}{h_3}\frac{\partial h_2}{\partial y_3} + \frac{u_1}{h_1}\frac{\partial h_2}{\partial y_1}\right)^2 + \frac{1}{2}\left(\frac{\partial u_3}{\partial y_2} - \frac{u_2}{h_3}\frac{\partial h_2}{\partial y_3}\right)^2 + \frac{1}{2}\left(\frac{\partial u_1}{\partial y_2} - \frac{u_2}{h_1}\frac{\partial h_2}{\partial y_1}\right)^2$$

$$\gamma_{33} = h_3 \frac{\partial u_3}{\partial y_3} + \frac{h_3 u_1}{h_1}\frac{\partial h_3}{\partial y_1} + \frac{h_3 u_2}{h_2}\frac{\partial h_3}{\partial y_2}$$

$$+\frac{1}{2}\left(\frac{\partial u_3}{\partial y_3} + \frac{u_1}{h_1}\frac{\partial h_3}{\partial y_1} + \frac{u_2}{h_2}\frac{\partial h_3}{\partial y_2}\right)^2 + \frac{1}{2}\left(\frac{\partial u_1}{\partial y_3} - \frac{u_3}{h_1}\frac{\partial h_3}{\partial y_1}\right)^2 + \frac{1}{2}\left(\frac{\partial u_2}{\partial y_3} - \frac{u_3}{h_2}\frac{\partial h_3}{\partial y_2}\right)^2$$

$$\gamma_{12} = \frac{1}{2}\left(h_1 \frac{\partial u_1}{\partial y_2} + h_2 \frac{\partial u_2}{\partial y_1} - u_2 \frac{\partial h_2}{\partial y_1} - u_1 \frac{\partial h_1}{\partial y_2}\right)$$

$$+\frac{1}{2}\left(\frac{\partial u_1}{\partial y_2} - \frac{u_2}{h_1}\partial h_2 \partial y_1\right)\left(\frac{\partial u_1}{\partial y_1} + \frac{u_2}{h_2}\frac{\partial h_1}{\partial y_2} + \frac{u_3}{h_3}\frac{\partial h_1}{y_3}\right) + \frac{1}{2}\left(\frac{\partial u_2}{\partial y_1} - \frac{u_1}{h_2}\frac{\partial h_1}{\partial y_2}\right)\left(\frac{\partial u_2}{\partial y_2} + \frac{u_1}{h_1}\frac{\partial h_2}{\partial y_1} + \frac{u_3}{h_3}\frac{\partial h_2}{\partial y_3}\right) \qquad \text{(A-3.1)}$$

$$+\frac{1}{2}\left(\frac{\partial u_3}{\partial y_1} - \frac{u_1}{h_3}\frac{\partial h_1}{\partial y_3}\right)\left(\frac{\partial u_3}{\partial y_2} - \frac{u_2}{h_3}\frac{\partial h_2}{\partial y_3}\right)$$

$$\gamma_{13} = \frac{1}{2}\left(h_3 \frac{\partial u_3}{\partial y_1} + h_1 \frac{\partial u_1}{\partial y_3} - u_1 \frac{\partial h_1}{\partial y_3} - u_3 \frac{\partial h_3}{\partial y_1}\right)$$

$$+\frac{1}{2}\left(\frac{\partial u_1}{\partial y_3} - \frac{u_3}{h_1}\frac{\partial h_3}{\partial y_1}\right)\left(\frac{\partial u_1}{\partial y_1} + \frac{u_3}{h_3}\frac{\partial h_1}{\partial y_3} + \frac{u_2}{h_2}\frac{\partial h_1}{y_2}\right) + \frac{1}{2}\left(\frac{\partial u_3}{\partial y_1} - \frac{u_1}{h_3}\frac{\partial h_1}{\partial y_3}\right)\left(\frac{\partial u_3}{\partial y_3} + \frac{u_1}{h_1}\frac{\partial h_3}{\partial y_1} + \frac{u_2}{h_2}\frac{\partial h_3}{\partial y_2}\right)$$

$$+\frac{1}{2}\left(\frac{\partial u_2}{\partial y_1} - \frac{u_1}{h_2}\frac{\partial h_1}{\partial y_2}\right)\left(\frac{\partial u_2}{\partial y_3} - \frac{u_3}{h_2}\frac{\partial h_3}{\partial y_2}\right)$$

$$\gamma_{23} = \frac{1}{2}\left(h_3 \frac{\partial u_3}{\partial y_2} + h_2 \frac{\partial u_2}{\partial y_3} - u_2 \frac{\partial h_2}{\partial y_3} - u_3 \frac{\partial h_3}{\partial y_2}\right)$$

$$+\frac{1}{2}\left(\frac{\partial u_2}{\partial y_3} - \frac{u_3}{h_2}\frac{\partial h_3}{\partial y_2}\right)\left(\frac{\partial u_2}{\partial y_2} + \frac{u_3}{h_3}\frac{\partial h_2}{\partial y_3} + \frac{u_1}{h_1}\frac{\partial h_2}{y_1}\right) + \frac{1}{2}\left(\frac{\partial u_3}{\partial y_2} - \frac{u_2}{h_3}\frac{\partial h_2}{\partial y_3}\right)\left(\frac{\partial u_3}{\partial y_3} + \frac{u_2}{h_2}\frac{\partial h_3}{\partial y_2} + \frac{u_1}{h_1}\frac{\partial h_3}{\partial y_1}\right)$$

$$+\frac{1}{2}\left(\frac{\partial u_1}{\partial y_2} - \frac{u_2}{h_1}\frac{\partial h_2}{\partial y_1}\right)\left(\frac{\partial u_1}{\partial y_3} - \frac{u_3}{h_1}\frac{\partial h_3}{\partial y_1}\right)$$

The equation of motion for a cylindrical shell (equation 3.25):

$$
\begin{aligned}
&L_1(U,V,W,\beta_x,\beta_\theta,\overline{P}_{ij}) = \\
&P_{11}\frac{\partial^2 U_x}{\partial x^2} + \left(\frac{1}{R}(P_{15}+P_{51}) - \frac{1}{2R^2}(P_{1,10}+P_{10,1})\right)\frac{\partial^2 U_x}{\partial x \partial \theta} + \\
&+\left(\frac{P_{55}}{R^2} - \frac{(P_{10,5}+P_{5,10})}{2R^3} + \frac{P_{10,10}}{4R^4}\right)\frac{\partial^2 U_x}{\partial \theta^2} - I_1\frac{\partial^2 U_x}{\partial t^2} + \\
&+\left(P_{12} + \frac{P_{18}}{2R}\right)\frac{\partial^2 U_\theta}{\partial x^2} + \left(\frac{P_{58}}{2R^2} + \frac{1}{R}(P_{14}+P_{52}) - \frac{P_{10,2}}{2R^2} - \frac{P_{10,8}}{4R^3}\right)\frac{\partial^2 U_\theta}{\partial x \partial \theta} + \\
&+\left(\frac{P_{54}}{R^2} - \frac{P_{10,4}}{2R^3}\right)\frac{\partial^2 U_\theta}{\partial \theta^2} + \frac{P_{14}}{R}\frac{\partial W}{\partial x} + \left(\frac{P_{54}}{R^2} - \frac{P_{10,4}}{2R^3}\right)\frac{\partial W}{\partial \theta} + \\
&P_{17}\frac{\partial^2 \beta_x}{\partial x^2} + \left(\frac{1}{R}(P_{1,10}+P_{57}) - \frac{P_{10,7}}{2R^2}\right)\frac{\partial^2 \beta_x}{\partial x \partial \theta} + \left(\frac{P_{5,10}}{R^2} - \frac{P_{10,10}}{2R^3}\right)\frac{\partial^2 \beta_x}{\partial \theta^2} - I_2\frac{\partial^2 \beta_x}{\partial t^2} + \\
&P_{18}\frac{\partial^2 \beta_\theta}{\partial x^2} + \left(\frac{1}{R}(P_{19}+P_{58}) - \frac{P_{10,8}}{2R^2}\right)\frac{\partial^2 \beta_\theta}{\partial x \partial \theta} + \left(\frac{P_{5,9}}{R^2} - \frac{P_{10,9}}{2R^3}\right)\frac{\partial^2 \beta_\theta}{\partial \theta^2}
\end{aligned}
$$

$$
\begin{aligned}
&L_2(U,V,W,\beta_x,\beta_\theta,\overline{P}_{ij}) = \\
&\left(\frac{P_{81}}{2R} + P_{21}\right)\frac{\partial^2 U_x}{\partial x^2} + \left(\frac{1}{R}(P_{25}+P_{41}) + \frac{P_{85}}{2R^2} - \frac{P_{8,10}}{4R^3} - \frac{P_{2,10}}{2R^2}\right)\frac{\partial^2 U_x}{\partial x \partial \theta} + \\
&+\left(\frac{P_{45}}{R^2} - \frac{P_{4,10}}{2R^3}\right)\frac{\partial^2 U_x}{\partial \theta^2} + \\
&\left(\frac{P_{82}}{2R} + \frac{P_{88}}{4R^2} + P_{22} + \frac{P_{28}}{R}\right)\frac{\partial^2 U_\theta}{\partial x^2} + \left(\frac{1}{R}(P_{24}+P_{42}) + \frac{1}{2R^2}(P_{48}+P_{84})\right)\frac{\partial^2 U_\theta}{\partial x \partial \theta} + \\
&+\frac{P_{44}}{R^2}\frac{\partial^2 U_\theta}{\partial \theta^2} - \frac{P_{66}}{R^2}U_\theta - I_1\frac{\partial^2 U_\theta}{\partial t^2} + \\
&+\left(\frac{1}{R}(P_{24}+P_{63}) + \frac{P_{84}}{2R^2}\right)\frac{\partial W}{\partial x} + \frac{1}{R^2}(P_{44}+P_{66})\frac{\partial W}{\partial \theta} + \\
&+\left(\frac{P_{87}}{2R} + P_{27}\right)\frac{\partial^2 \beta_x}{\partial x^2} + \left(\frac{1}{R}(P_{2,10}+P_{47}) + \frac{P_{8,10}}{2R^2}\right)\frac{\partial^2 \beta_x}{\partial x \partial \theta} + \\
&+\frac{P_{4,10}}{R^2}\frac{\partial^2 \beta_x}{\partial \theta^2} + \frac{P_{63}}{R}\beta_x + \\
&+\left(\frac{P_{88}}{2R} + P_{28}\right)\frac{\partial^2 \beta_\theta}{\partial x^2} + \left(\frac{1}{R}(P_{29}+P_{48}) + \frac{P_{89}}{2R^2}\right)\frac{\partial^2 \beta_\theta}{\partial x \partial \theta} + \\
&+\frac{P_{49}}{R^2}\frac{\partial^2 \beta_\theta}{\partial \theta^2} + \frac{P_{66}}{R}\beta_\theta - I_2\frac{\partial^2 \beta_\theta}{\partial t^2}
\end{aligned}
\qquad \text{(A-3.2,3.3,3.4)}
$$

$$
\begin{aligned}
&L_3(U,V,W,\beta_x,\beta_\theta,\overline{P}_{ij}) = \\
&-\frac{P_{41}}{R}\frac{\partial U_x}{\partial x} + \left(\frac{P_{4,10}}{2R^3} - \frac{P_{45}}{R^2}\right)\frac{\partial U_x}{\partial \theta} - \\
&-\frac{1}{R}\left(P_{36}+P_{42}+\frac{P_{48}}{2R}\right)\frac{\partial U_\theta}{\partial x} - \frac{1}{R^2}(P_{44}+P_{66})\frac{\partial U_\theta}{\partial \theta} + \\
&+P_{33}\frac{\partial^2 W}{\partial x^2} + \frac{1}{R}(P_{63}+P_{36})\frac{\partial^2 W}{\partial x \partial \theta} + \frac{P_{66}}{R^2}\frac{\partial^2 W}{\partial \theta^2} - \frac{P_{44}}{R^2}W - I_1\frac{\partial^2 W}{\partial t^2} + \\
&+\left(P_{33} - \frac{P_{47}}{R}\right)\frac{\partial \beta_x}{\partial x} + \frac{1}{R}\left(P_{63} - \frac{P_{4,10}}{R}\right)\frac{\partial \beta_x}{\partial \theta} + \\
&+\left(P_{36} - \frac{P_{48}}{R}\right)\frac{\partial \beta_\theta}{\partial x} + \frac{1}{R}\left(P_{66} - \frac{P_{49}}{R}\right)\frac{\partial \beta_\theta}{\partial \theta}
\end{aligned}
$$

$$L_4(U,V,W,B_x,\beta_\theta,\overline{P_{ij}}) =$$

$$P_{71}\frac{\partial^2 U_x}{\partial x^2}+(\frac{1}{R}(P_{75}+P_{10,1})-\frac{P_{7,10}}{2R^2})\frac{\partial^2 U_x}{\partial x\partial\theta}+(\frac{P_{10,5}}{R^2}-\frac{P_{10,10}}{2R^3})\frac{\partial^2 U_x}{\partial\theta^2}-I_2\frac{\partial^2 U_x}{\partial t^2}+$$

$$+(P_{72}+\frac{P_{78}}{2R})\frac{\partial^2 U_\theta}{\partial x^2}+(\frac{1}{R}(P_{74}+P_{10,2})+\frac{P_{10,8}}{2R^2})\frac{\partial^2 U_\theta}{\partial x\partial\theta}+\frac{P_{10,4}}{R^2}\frac{\partial^2 U_\theta}{\partial\theta^2}+\frac{P_{36}}{R}U_\theta+$$

$$+(\frac{P_{74}}{R}-P_{33})\frac{\partial W}{\partial x}+\frac{1}{R}(\frac{P_{10,4}}{R}-P_{36})\frac{\partial W}{\partial\theta}+$$

$$+P_{77}\frac{\partial^2\beta_x}{\partial x^2}+\frac{1}{R}(P_{7,10}+P_{10,7})\frac{\partial^2\beta_x}{\partial x\partial\theta}+\frac{P_{10,10}}{R^2}\frac{\partial^2\beta_x}{\partial\theta^2}-P_{33}\beta x-I_3\frac{\partial^2\beta_x}{\partial t^2}+$$

$$P_{78}\frac{\partial^2\beta_\theta}{\partial x^2}+\frac{1}{R}(P_{79}+P_{10,8})\frac{\partial^2\beta_\theta}{\partial x\partial\theta}+\frac{P_{10,9}}{R^2}\frac{\partial^2\beta_\theta}{\partial\theta^2}-P_{36}\beta_\theta$$

$$L_5(U,V,W,\beta_x,\beta_\theta,\overline{P_{ij}}) =$$

$$P_{81}\frac{\partial U_x^2}{\partial x^2}+(\frac{1}{R}(P_{85}+P_{91})-\frac{P_{8,10}}{2R^2})\frac{\partial^2 U_x}{\partial x\partial\theta}+(\frac{P_{95}}{R^2}-\frac{P_{9,10}}{2R^3})\frac{\partial^2 U_x}{\partial\theta^2}+$$

$$(P_{82}+\frac{P_{88}}{2R})\frac{\partial^2 U_\theta}{\partial x^2}+(\frac{1}{R}(P_{84}+P_{92})+\frac{P_{98}}{2R^2})\frac{\partial^2 U_\theta}{\partial x\partial\theta}+$$

$$+\frac{P_{94}}{R^2}\frac{\partial^2 U_\theta}{\partial\theta^2}+\frac{P_{66}}{R}U_\theta-I_2\frac{\partial^2 U_\theta}{\partial t^2}+$$

$$+(\frac{P_{84}}{R}-P_{63})\frac{\partial W}{\partial x}+\frac{1}{R}(\frac{P_{94}}{R}-P_{66})\frac{\partial W}{\partial\theta}+$$

$$P_{87}\frac{\partial^2\beta_x}{\partial x^2}+\frac{1}{R}(P_{97}+P_{8,10})\frac{\partial^2\beta_x}{\partial x\partial\theta}+\frac{P_{9,10}}{R^2}\frac{\partial^2\beta_x}{\partial\theta^2}-P_{63}\beta_x+$$

$$P_{88}\frac{\partial^2\beta_\theta}{\partial x^2}+\frac{1}{R}(P_{89}+P_{98})\frac{\partial^2\beta_\theta}{\partial x\partial\theta}+\frac{P_{99}}{R^2}\frac{\partial^2\beta_\theta}{\partial\theta^2}-P_{66}\beta_\theta-I_3\frac{\partial^2\beta_\theta}{\partial t^2}$$

(A-3.5.3.6)

$$
\begin{Bmatrix} N_{xx} \\ N_{x\theta} \\ Q_{xz} \\ N_{\theta\theta} \\ N_{\theta z} \\ Q_{\theta z} \\ M_{xx} \\ M_{x\theta} \\ M_{\theta\theta} \\ M_{\theta z} \end{Bmatrix}
=
\begin{bmatrix}
A_{11}+\frac{B_{11}}{R} & 2(A_{16}+\frac{B_{16}}{R}) & 0 & A_{12}+\frac{B_{12}}{R} & 2(A_{16}+\frac{B_{16}}{R}) & 0 & B_{11}+\frac{D_{11}}{R} & 2(B_{16}+\frac{D_{16}}{R}) & B_{12}+\frac{D_{12}}{R} & 2(B_{16}+\frac{D_{16}}{R}) \\
A_{61}+\frac{B_{61}}{R} & 2(A_{66}+\frac{B_{66}}{R}) & 0 & A_{62}+\frac{B_{62}}{R} & 2(A_{66}+\frac{B_{66}}{R}) & 0 & B_{61}+\frac{D_{61}}{R} & 2(B_{66}+\frac{D_{66}}{R}) & B_{62}+\frac{D_{62}}{R} & 2(B_{66}+\frac{D_{66}}{R}) \\
0 & 0 & 2(A_{55}+\frac{B_{55}}{R}) & 0 & 0 & 2(A_{45}+\frac{B_{45}}{R}) & 0 & 0 & 0 & 0 \\
A_{21} & 2A_{26} & 0 & A_{22} & 2A_{26} & 0 & B_{21} & 2B_{26} & B_{22} & 2B_{26} \\
A_{61} & 2A_{66} & 0 & A_{62} & 2A_{66} & 0 & B_{61} & 2B_{66} & B_{62} & 2B_{66} \\
0 & 0 & 2A_{45} & 0 & 0 & 2A_{44} & 0 & 0 & 0 & 0 \\
B_{11}+\frac{D_{11}}{R} & 2(B_{16}+\frac{D_{16}}{R}) & 0 & B_{12}+\frac{D_{12}}{R} & 2(B_{16}+\frac{D_{16}}{R}) & 0 & D_{11}+\frac{E_{11}}{R} & 2(D_{16}+\frac{E_{16}}{R}) & D_{12}+\frac{E_{12}}{R} & 2(D_{16}+\frac{E_{16}}{R}) \\
B_{61}+\frac{D_{61}}{R} & 2(B_{66}+\frac{D_{66}}{R}) & 0 & B_{62}+\frac{D_{62}}{R} & 2(B_{66}+\frac{D_{66}}{R}) & 0 & D_{61}+\frac{E_{61}}{R} & 2(D_{66}+\frac{E_{66}}{R}) & D_{62}+\frac{E_{62}}{R} & 2(D_{66}+\frac{E_{66}}{R}) \\
B_{21} & 2B_{26} & 0 & B_{22} & 2B_{26} & 0 & D_{21} & 2D_{26} & D_{22} & 2D_{26} \\
B_{61} & 2B_{66} & 0 & B_{62} & 2B_{66} & 0 & D_{61} & 2D_{66} & D_{62} & 2D_{66}
\end{bmatrix}_{(10\times 10)}
\begin{Bmatrix} \varepsilon^{o}_{x} \\ \gamma^{o}_{x} \\ \mu^{o}_{x} \\ \varepsilon^{o}_{\theta} \\ \gamma^{o}_{\theta} \\ \mu^{o}_{\theta} \\ \kappa_{x} \\ \tau_{x} \\ \kappa_{\theta} \\ \tau_{\theta} \end{Bmatrix}_{(10\times 1)}
$$

(A-3.7)

Matrix [H]:

$$\begin{bmatrix} H_{11} & H_{12} & H_{13} & H_{14} & H_{15} \\ H_{21} & H_{22} & H_{23} & H_{24} & H_{25} \\ H_{31} & H_{32} & H_{33} & H_{34} & H_{35} \\ H_{41} & H_{42} & H_{43} & H_{44} & H_{45} \\ H_{51} & H_{52} & H_{53} & H_{54} & H_{55} \end{bmatrix} \begin{Bmatrix} A \\ B \\ C \\ D \\ E \end{Bmatrix} = \begin{Bmatrix} 0 \\ 0 \\ 0 \\ 0 \\ 0 \end{Bmatrix}$$

where:

$$H_{11}=P_{11}(-\overline{m}^2)-[\frac{P_{5,10}+P_{10,5}}{2R^3}-\frac{P_{10,10}}{4R^4}-\frac{P_{55}}{R^2}]\eta^2-[\frac{P_{15}+P_{51}}{R}-\frac{P_{10,1}+P_{1,10}}{2R^2}](\overline{m}\eta)$$

$$H_{12}=(P_{12}+\frac{P_{18}}{2R})(-\overline{m}^2)+[\frac{P_{14}+P_{52}}{R}+\frac{P_{58}-P_{10,2}}{2R^2}-\frac{P_{10,8}}{4R^3}]\overline{m}\eta+(\frac{P_{54}}{R^2}-\frac{P_{10,4}}{2R^3})\eta^2$$

$$H_{13}=\frac{P_{14}}{R}\overline{m}+(\frac{P_{54}}{R^2}-\frac{P_{10,4}}{2R^3})\eta$$

$$H_{14}=P_{17}(-\overline{m}^2)-[\frac{P_{1,10}+P_{57}}{R}-\frac{P_{10,7}}{2R^2}]\overline{m}\eta-(\frac{P_{10,10}}{2R^3}-\frac{P_{5,10}}{R^2})\eta^2$$

$$H_{15}=P_{18}(-\overline{m}^2)+[\frac{P_{19}+P_{58}}{R}-\frac{P_{10,8}}{2R^2}]\overline{m}\eta-(\frac{P_{10,9}}{2R^3}-\frac{P_{59}}{R^2})\eta^2$$

$$H_{22}=[P_{22}+\frac{P_{28}+P_{82}}{2R}+\frac{P_{88}}{4R^2}](-\overline{m}^2)+[\frac{P_{24}+P_{42}}{R}+\frac{P_{48}+P_{84}}{2R^2}]\overline{m}\eta-\frac{1}{R^2}(P_{66}-P_{44}\eta^2)$$

$$H_{23}=(\frac{P_{24}+P_{63}}{R}+\frac{P_{84}}{2R^2})\overline{m}+(P_{44}+P_{66})\frac{\eta}{R^2} \qquad \text{(A-3.8)}$$

$$H_{24}=(P_{27}+\frac{P_{87}}{2R})(-\overline{m}^2)-[\frac{P_{2,10}+P_{47}}{R}+\frac{P_{8,10}}{2R^2}]\overline{m}\eta+\frac{\eta^2}{R^2}P_{4,10}+\frac{P_{63}}{R}$$

$$H_{25}=(P_{28}+\frac{P_{88}}{2R})(-\overline{m}^2)+(\frac{P_{29}+P_{48}}{R}+\frac{P_{89}}{2R^2})\overline{m}\eta+\frac{P_{49}}{R^2}\eta^2+\frac{P_{66}}{R}$$

$$H_{33}=P_{33}(-\overline{m}^2)+(\frac{P_{36}+P_{63}}{R})\overline{m}\eta+\frac{P_{66}}{R^2}\eta^2-\frac{P_{44}}{R^2}$$

$$H_{34}=(\frac{P_{47}}{R}-P_{33})(\overline{m})+(\frac{P_{63}}{R}-\frac{P_{4,10}}{R^2})\eta$$

$$H_{35}=(P_{36}-\frac{P_{48}}{R})(\overline{m})+(P_{66}-\frac{P_{49}}{R})\frac{\eta}{R}$$

$$H_{44}=P_{77}(-\overline{m}^2)-(P_{7,10}+P_{10,7})\frac{\overline{m}\eta}{R}+\frac{P_{10,10}}{R^2}\eta^2-P_{33}$$

$$H_{45}=P_{78}(-\overline{m}^2)+(P_{79}+P_{10,8})\frac{\overline{m}\eta}{R}+P_{10,9}\frac{\eta^2}{R^2}-P_{36}$$

$$H_{55}=P_{88}(-\overline{m}^2)+(P_{98}+P_{89})\frac{\overline{m}\eta}{R}+\frac{P_{99}}{R^2}\eta^2-P_{66}$$

where

$$\overline{m}=\frac{m\pi}{L}$$

Matrix [LL]:

$$
\begin{aligned}
&LL(1,j)=\alpha_j \\
&LL(2,j)=\beta_j \\
&LL(3,j)=1 \qquad\qquad j=1,2,\ldots,10 \\
&LL(4,j)=\gamma_j \\
&LL(5,j)=\delta_j \\
X(i,j)=e^{\eta_i\theta} \qquad &if \qquad i=j \\
&\qquad i,j=1,2,\ldots,10 \\
X(i,j)=0. \qquad &if \qquad i\neq j
\end{aligned}
\tag{A-3.9}
$$

Matrix [A]:

$$
\begin{aligned}
&A(1,j)=\alpha_j \;;\; A(6,j)=A(1,j)a_j \\
&A(2,j)=\beta_j \;;\; A(7,j)=A(2,j)a_j \\
&A(3,j)=1 \;;\; A(8,j)=a_j \qquad\qquad a_j=e^{\eta_j\varphi} \quad j=1,2,\ldots,10 \\
&A(4,j)=\gamma_j \;;\; A(9,j)=A(4,j)a_j \\
&A(5,j)=\delta_j \;;\; A(10,j)=A(5,j)a_j
\end{aligned}
\tag{A-3.10}
$$

Matrices [QQ] and [J] :

$$
\begin{aligned}
&\{\varepsilon\}=[T]_{(10\times10)}[QQ]_{(10\times10)}[A]^{-1}{}_{(10\times10)}\begin{Bmatrix}\delta_i\\ \delta_j\end{Bmatrix}_{(10\times1)} \\
&With:\ [QQ]_{(10\times10)}=[J]_{(10\times10)}[X]_{(10\times10)} \quad ; \quad [T]=\begin{bmatrix}[T_1] & 0\\ 0 & [T_1]\end{bmatrix}
\end{aligned}
\tag{A-3.11}
$$

$$
\begin{aligned}
&J(1,j)=-\alpha_j\overline{m} \quad ; \quad J(6,j)=\frac{1}{R}(\eta_j-\beta_j)+\delta_j \\
&J(2,j)=\beta_j\overline{m} \quad ; \quad J(7,j)=-\gamma_j\overline{m} \\
&J(3,j)=\gamma_j+\overline{m} \quad ; \quad J(8,j)=\delta_j\overline{m}+\frac{\overline{m}}{2R}\beta_j \qquad j=1,\ldots,10 \\
&J(4,j)=\frac{1}{R}(1+\eta_j\beta_j) \quad ; \quad J(9,j)=\frac{1}{R}\eta_j\delta_j \\
&J(5,j)=\frac{1}{R}(\eta_j\alpha_j) \quad ; \quad J(10,j)=\frac{1}{R}\eta_j\gamma_j-\frac{1}{2R^2}\eta_j\alpha_j
\end{aligned}
\tag{A-3.12}
$$

where:

$$\overline{m}=\frac{m\pi}{L}$$

3.12 REFERENCES

[1] Ambartsumyan, S.A. Theory of Anisotropic Shells. NASA-TT-F-118, 1964.

[2] Bert, C.W. Analysis of Shells. In:Broutman LJ, editor. Analysis and Performance of Composites. New York: John Wiley, 1980: 207-258.

[3] Bhimaraddi, A. A Higher Order Theory for Free Vibration Analysis of Circular Cylindrical Shells. Int. J. Solids Struc. 1984; **20 (7)**: 623-630.

[4] Dong, S.B., Pister, K.S., Taylor, R.L. On the Theory of Laminated Anisotropic Shells and Plates. Journal of Aero. Sci. 1962; **29**: 969-975.

[5] Dong, S.B., Tso, F.K.W. On a Laminated Orthotropic Shell Theory Including

Transverse Shear Deformation. J. Applied Mechanics 1972; **39**: 1091-1096.

[6] Grigolyuk, E.I., Kulikov, G.M. General Direction of Development of the Theory of Multi-layered Shells. Mechanics of Composite Materials 1988; **24(2)**: PP 231-241.

[7] Gulati, S.T., Essenberg, F. Effects of Anisotropy in Axisymmetric Cylindrical Shells. Journal of Applied Mechanics 1967; **34**: 650-666.

[8] Hilderbrand, F.B., Reissner, E., Thomas, G.B. Notes on the Foundations of the Theory of Small Displacements of Orthotropic Shells. NACA-TN-1833, 1949.

[9] Hsu, T.M., Wang, J.T.S. A Theory of Laminated Cylindrical Shells Consisting of Layers of Orthotropic Laminae. AIAA Journal 1970; **8(12)**: 2141-2146.

[10] Jing, H.S., Tzeng, K.G. Approximate Elasticity Solution for Laminated Anisotropic Finite Cylinders. AIAA Journal 1993; **31(11)**: 2121-2129.

[11] Koiter, W.T. A Consistent First Approximation in the General Theory of Thin Elastic Shells. Pro. Sym. on Theory of Thin Elastic Shells, Amsterdam, North Holland 1960: 12-32.

[12] Kraus, H. Thin Elastic Shells. New York: John Wiley, 1967.

[13] Lakis, A.A., Païdoussis, M.P. Free Vibration of Cylindrical Shells Partially

Filled with Liquid. Journal of Sound and Vibration 1971; **19**: 1-15.

[14] Lakis, A.A., Païdoussis, M.P. Prediction of the Response of a Cylindrical Shell to Arbitrary of Boundary Layer-Induced Random Pressure Field. Journal of Sound and Vibration 1972; **25**:1-27.

[15] Lakis, A.A., Païdoussis, M.P. Dynamic Analysis of Axially Non-Uniform Thin Cylindrical Shells. Journal of Mech. Eng. Science 1972; **14(1)**: 49-71.

[16] Lakis, A.A. Effects of Fluid Pressures on the Vibration Characteristics of Cylindrical Vessels. Proc. of the Int. Conf. on Pressure Surges, London, UK 1976: 11-15.

[17] Lakis, A.A., Doré, R. General Method for Analysing Contact Stresses on Cylindrical Vessels. Int. J. Solids and Struct. 1978; **14(6)**: 499-516.

[18] Lakis, A.A., Tuy, N.Q., Selmane, A. Analysis of Axially Non-Uniform Thin Spherical Shells. Proc. of the Int. Symposium on Structural Analysis and Optimization, Paris, France 1989: 80- 85.

[19] Lakis, A.A., Laveau, A. Non-Linear Dynamic of Anisotropic Cylindrical Shells Containing A Flowing Fluid. Int. J. Solids and Struct. 1991; **28(9)**: 1079-1094.

[20] Lakis, A.A., Sinno, M. Free Vibration of Axisymmetric and Beam-Like Cylindrical Shells Partially Filled with Liquid. Int. J. For Num. Meth. in Eng. 1992; **33**: 235-

268.

[21] Lakis, A.A., Van Dyke, P., Ouriche, H. Dynamic Analysis of Anisotropic Fluid-Filled Conical Shells. Journal of Fluids and Struct. 1992; **6**: 135-162.

[22] Leissa, A.W. Vibration of Shells. NASA SP-288, 1973.

[23] Leissa, A.W, Lee JK, Wang AJ. Vibrations of Cantilevered Shallow Cylindrical Shells of Rectangular Platform. Journal of Sound and Vibration 1981; **78(3)**: 311-328.

[24] Naghdi, P.M. A Survey of Recent Progress in the Theory of Elastic Shells. Applied Mechanics Reviews 1956; **9(9)**: 365-388.

[25] Naghdi, P.M. On the Theory of Thin Elastic Shells. Quart. Appl. Math.1957; **14**: 369-380.

[26] Noor, A.K., Peters JM. Vibration analysis of Laminated Anisotropic Shells of Revolution. Computer Meth. in Appl. Mech. and Eng. 1987; **61**: 277-301.

[27] Novozhilov, V.V. The Theory of Thin Shells P. Noordhoff Ltd., 1959.

[28] Reddy, J.N. Exact Solutions of Moderately Thick Laminated Shells. Journal of Eng. Mech., ASCE 1984; **110 (5)**: 794-809.

[29] Reddy, J.N., Liu, C.F. A Higher Order Shear Deformation Theory of Laminated

Elastic Shells. Int. J. Engng. Sci. 1985; **23(3)**: 319-330.

[30] Reissner, E. On a Variational Theorem in Elasticity. Journal Math. and Physics 1950; **29**: 90-95.

[31] Reissner, E. Stress-strain Relation in The Theory of Thin Elastic Shells. Journal Math. Phys. 1952; **31**: 109-119.

[32] Ren, J.G. Analysis of Simply Supported Laminated Circular Cylindrical Shell Roofs. Composite Science and Technology 1989; **11(4)**: 277-292.

[33] Saada, A.S. Elasticity Theory and Applications. Pergamon Press, 1993.

[34] Sanders, J.L. An Improved First Approximation Theory for Thin Shells. NASA 1959, **TR R-24**:1-23. [35] Sanders, J.L. Nonlinear Theories for Thin Shells. Appl. Math.1962; **XXI(1)**: 21-36.

[36] Sciuva, M.D., Carrera, E. Elastodynamic Behavior of Relatively Thick, Symmetrically Laminated, Anisotropic Circular Cylindrical Shells. Transaction of the ASME 1992; **59**: 222- 224.

[37] Selmane, A., Lakis, A.A. Vibration Analysis of Anisotropic Open Cylindrical Shells Containing Flowing Fluid. Journal of Fluids and Structures 1997; **11**: 111-134.

[38] Selmane, A., Lakis, A.A. Influence of Geometric Non-Linearities on the Vibration of Orthotropic Open Cylindrical Shells. Int. Journal for Numerical Methods in Engineering 1997; **40**:1115-1137.

[39] Selmane, A., Lakis, A.A. Non-Linear Dynamic Analysis of Orthotropic Open Cylindrical Shells Subjected to a Flowing Fluid. Journal of Sound and Vibration 1997; **202(1)**: 67-93.

[40] Selmane, A., Lakis, A.A. Dynamic Analysis of Anisotropic Open Cylindrical Shells. Journal of Computer and Structures 1997; **62(1)**: 1-12.

[41] Toorani, M.H., Lakis, A.A. Effects of Transverse Shear Deformations and Rotatory Inertia on the General Equations of Anisotropic Plates and Shells. Tech. Report, No. **EPM/RT-99/03** ,1999, École Polytechnique de Montréal, Canada.

[42] Toorani, M.H., Lakis, A.A. The Effects of Transverse Shear Deformation on the Free Vibration of Anisotropic Open Circular Cylindrical Shells. Tech. Report, No. **EPM/RT-99/04**, 1999, École Polytechnique de Montréal, Canada.

[43] Voyiadjis, G.Z.. Shi, G. A Refined Two-Dimensional Theory for Thick Cylindrical Shells. Int. Journal of Solids and Struct. 1991; **27(3)**: 261-282.

[44] Flügge, W. Stresses in Shells. Springer-Verlag, Berlin (1962).

3.13 NOMENCLATURE

A_i , B_i , C_i , ..., J_i (i=1,2, ..., 10) Eq. (3.47) : defined by matrix components of [J]

A, B, C, D, E : defined by Eq.(3.24)

A_{ij} : extensional stiffness Eq.(3.20)

$A_{\alpha\beta}$:defined by Eq.(3.21)

B_{ij} : bending-extensional coupling stiffness Eq.(3.20)

$B_{\alpha\beta}$:defined by Eq.(3.21)

D_{ij} :bending stiffness Eq.(3.20)

f_i : coefficients of the characteristic equation (3.27)

h_i(i=1,2) : Scale factors Eq.(3.2)

I_i : inertia moment

L : length of the shell

L_i : motion equations Eq.(3.25)

m : axial mode number

$\overline{m}$: defined by $\dfrac{m\pi}{L}$

M_x, M_θ, $M_{x\theta}$, $M_{\theta x}$: the moment resultants

n : circumferential wave number

N_x, N_θ, $N_{x\theta}$, $N_{\theta x}$: the in-plane force resultants

P_{ij} : terms of elasticity matrix(i=1,... ,10 ; j=1,..., 10)

Q_{ij} : the elastic stiffness in the material coordinates Eq.(3.10)

$\overline{Q}_{ij}$: the elastic stiffness in the global coordinates Eq.(3.11)

Q_{xx}, $Q_{\theta\theta}$: the transverse force resultants

R : mean radius of the shell

t : thickness of the shell

u_1, u_2, w : the axial, circumferential and radial displacement respectively

U_m, V_m, W_m, β_{xm}, $\beta_{\theta m}$: amplitudes of u, v, w, β_x, and β_θ associated with m_{th} axial mode number

x : axial coordinate

α_i, β_i, γ_i and δ_i defined by Eq.(3.29)

β_1 and β_2 : the rotations of tangents to the reference surface

η_i : complex roots of the characteristic Eq.(3.27)

ε_i : deformation vector components

σ_i : stress vector components

θ : circumferential coordinate

ϕ_T : angle for the whole open shell

ω : natural frequency

Ω : non-dimensional frequency

ρ : density of the shell material

Liste of Matrices

[A] : defined by Eq.(3.35)

[B] : defined by equation(3.39)

{C}: vector for arbitrary constants

$\{f_i\}$: the internal forces acting at node *i*

[G] : defined by Eq.(3.47)

[H] : defined by Eq.(3.26)

[J] : defined by Eq. (3.39)

[k] : local stiffness matrix Eq.(3.46)

[K] : global stiffness matrix Eq.(3.50)

[m] : local mass matrix Eq.(3.47)

[M] : global mass matrix Eq.(3.50)

[N] : shape function matrix(3.37)

[QQ] : defined by Eq.(3.38)

[R] : defined by Eq.(3.42)

[S] : defined by Eq.(3.44)

[T] : transformation matrix Eq.(3.12)

$[T_m]$: defined by Eq.(3.24)

$\{\delta_i\}$: degrees of freedom at node *i*

$\{\delta_T\}$: degrees of freedom for total shell

Table 3.1

Non-dimensional fundamental frequencies (m=1) of simply-supported cylindrical shells with symmetric cross-ply 0°/90°/90°/0° $\Omega = \omega_0 R^2 \sqrt{\rho / E_2} / t$

	R/t=100				R/t=50				R/t=20			
L/R	HFE[1]	CST[2]	SDT[3]	PRE[4]	HFE[1]	CST[2]	SDT[3]	PRE[4]	HFE[1]	CST[2]	SDT[3]	PRE[4]
0.10	1409	1441	1160	1154	1120	1200	815.5	764.9	448.3	520	384.3	353.5
0.25	248	279.3	240.7	235.6	233.1	265.7	205.4	205.4	220.0	230.4	132.5	132.8
0.5	83.45	86.49	82.96	82.47	70.07	72.53	68.04	65.12	59.24	61.88	50.02	47.53
1	38.72	39.03	38.69	35.87	27.31	27.59	27.18	25.33	18.82	19.70	18.15	17.52
2.5	17.52	17.54	17.51	16.16	11.49	11.50	11.48	10.73	6.55	6.54	6.53	6.20
5	9.37	9.376	9.37	9.05	6.28	6.28	6.28	5.92	3.70	3.70	3.70	3.31
10	4.76	4.760	4.76	4.76	3.53	3.52	3.53	3.50	1.73	1.73	1.73	1.68
25	1.74	1.736	1.74	1.704	1.27	1.27	1.27	1.12	.74	.74	.74	.734
50	1.08	1.080	1.08	1.0296	.54	.54	.54	.53	.22	.22	.22	.215

(*) The superscript values identify the circumferential wave numbers (*n*)

1)HFE : Hybrid finite element method [40], these results were obtained by authors

2)CST : Classical shell theory [36]

3)SDT : Shear deformation theory[36]

4)Present Theory: (Hybrid finite element method + Shear Deformation ,Rotary Inertia and Initial Curvature Effects)

Table 3-2

Properties of the shell layers

Layer	Q_{11}(psi)	Q_{12}(psi)	Q_{22}(psi)	Q_{66}(psi)	Thickness (inches)	Density
1	6.70×10^6	2.11×10^6	12.00×10^6	2.51×10^6	0.20	0.5ρ
2	33.00×10^6	11.00×10^6	33.00×10^6	13.20×10^6	0.20	1.0ρ

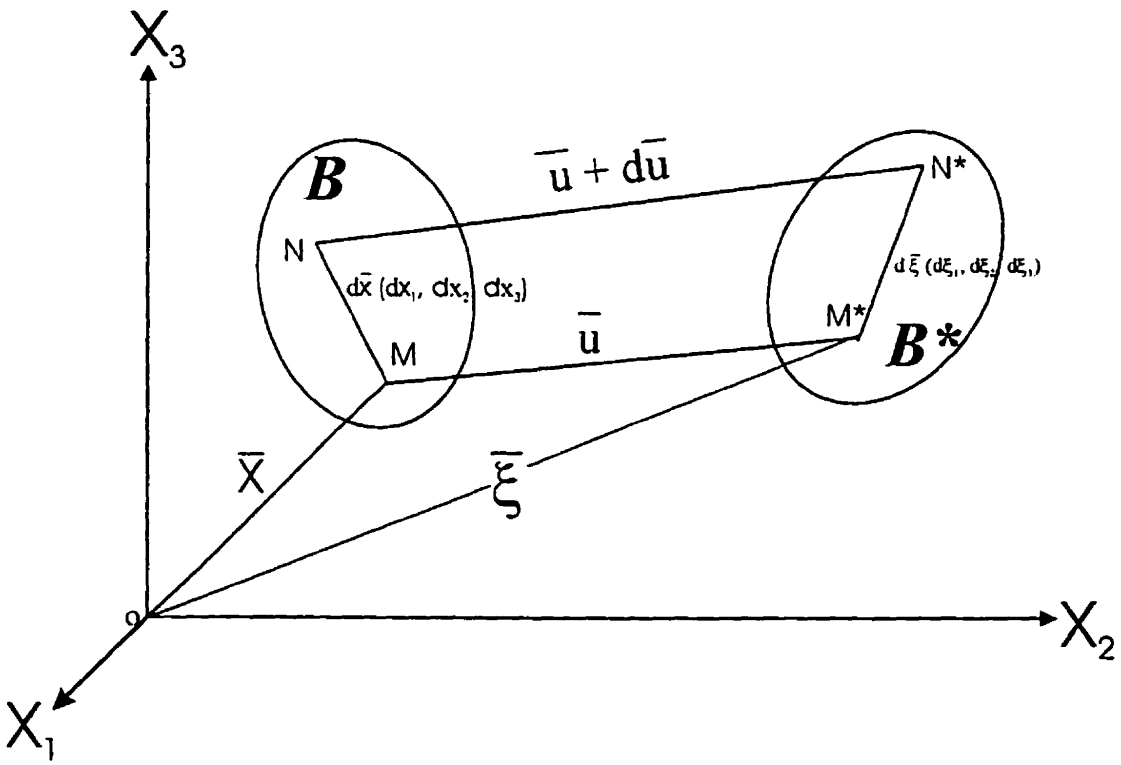

Figure 3.1 Segment MN deforms to M*N* through displacement vector $\bar{u}$

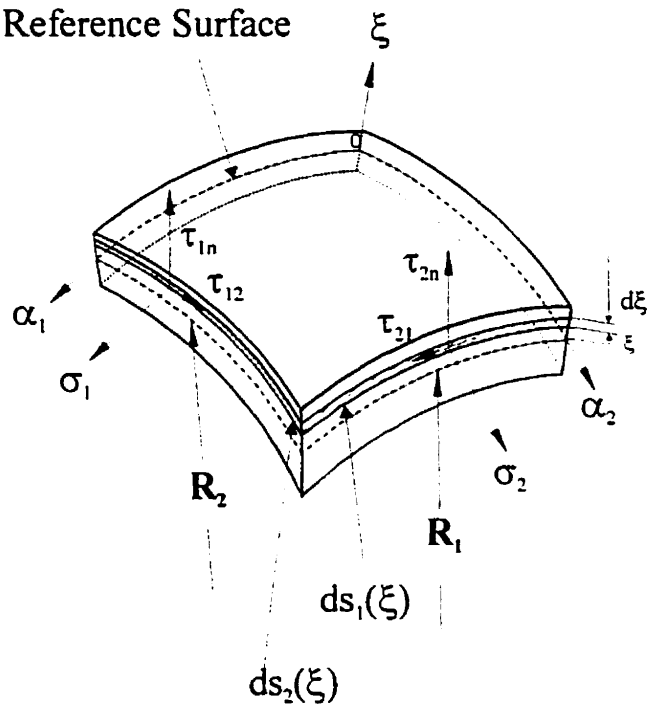

Figure 3.2 Surface and shell coordinate system

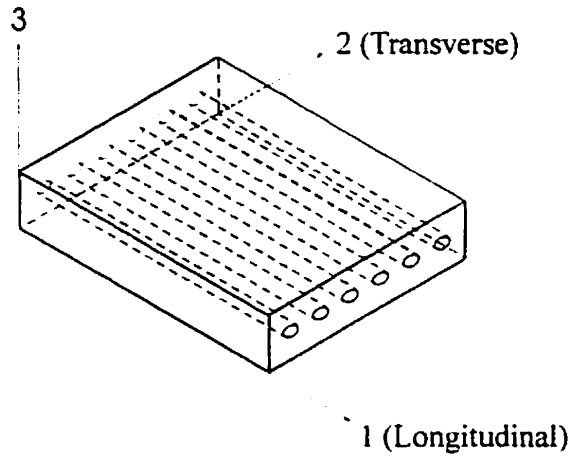

Figure 3.3 Unidirectional lamina and principal coordinate axes

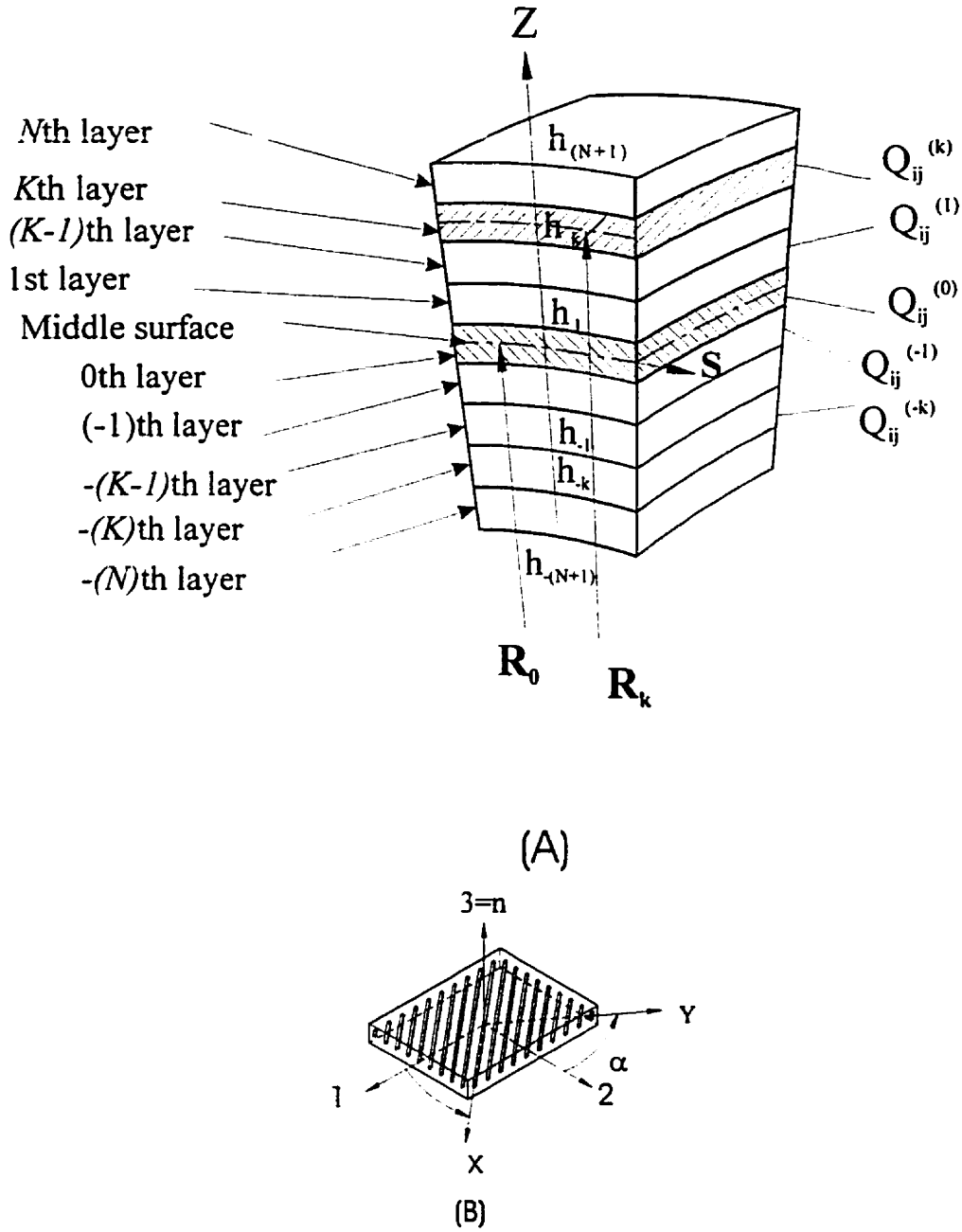

Figure 3.4 A) Multidirectional laminate with coordinate notation of individual plies
B) A fibre reinforced lamina with global and material coordinate systems

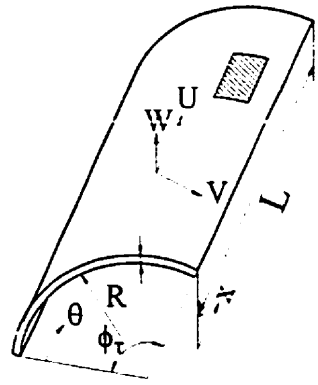

(A)

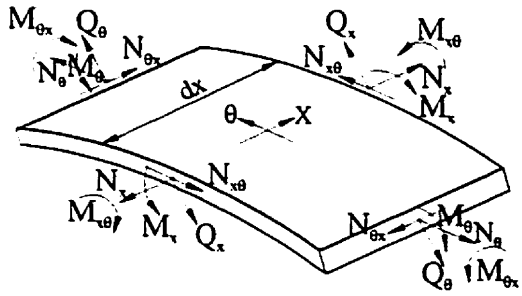

(B)

Figure 3.5 A) Circular cylindrical shell geometry
B) Positive directions of integrated stress quantities

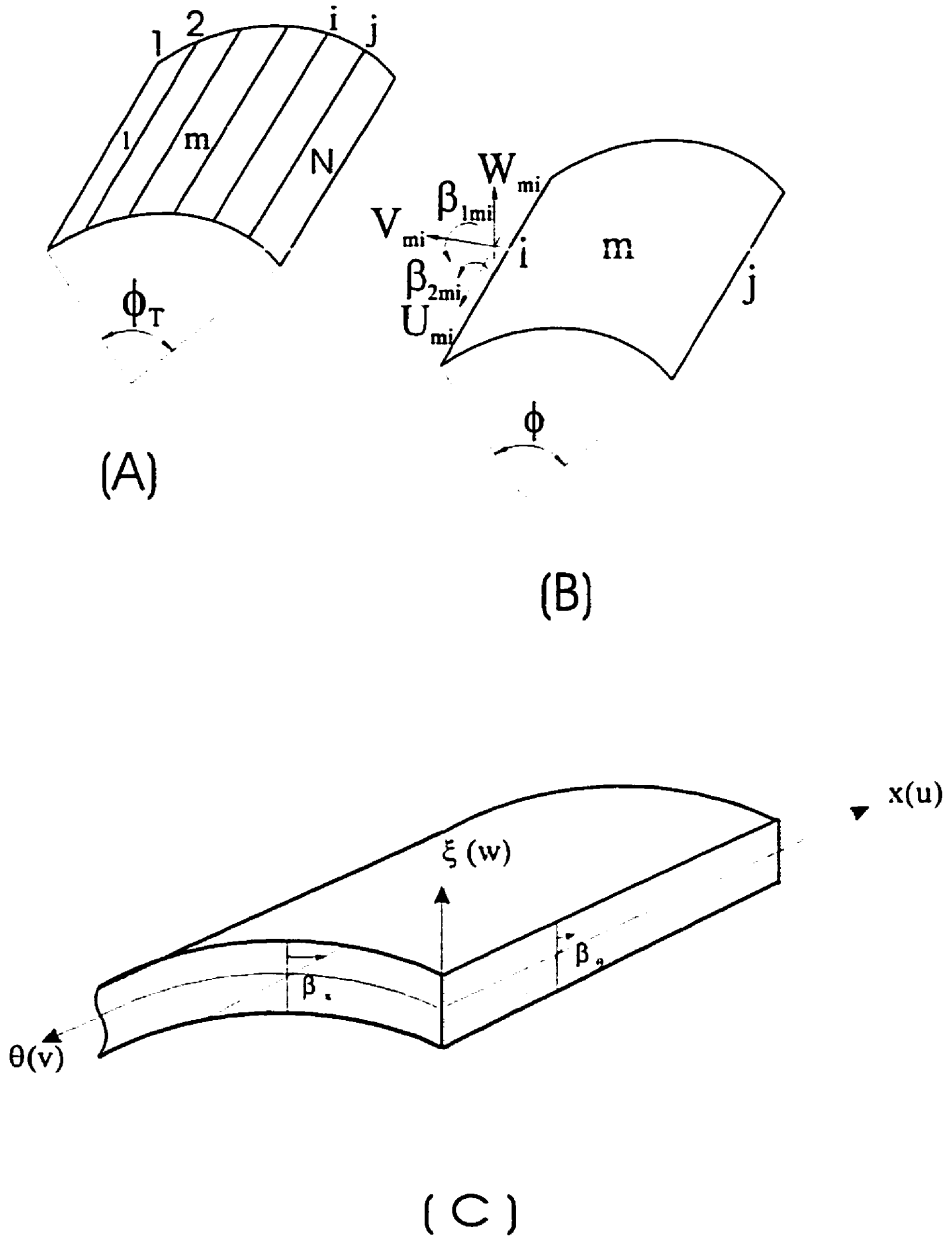

Figure 3.6 A) Finite element discretization
B) Nodal displacement at node *i* for the *m*'th element. N: Number of elements
C) Definition of variables

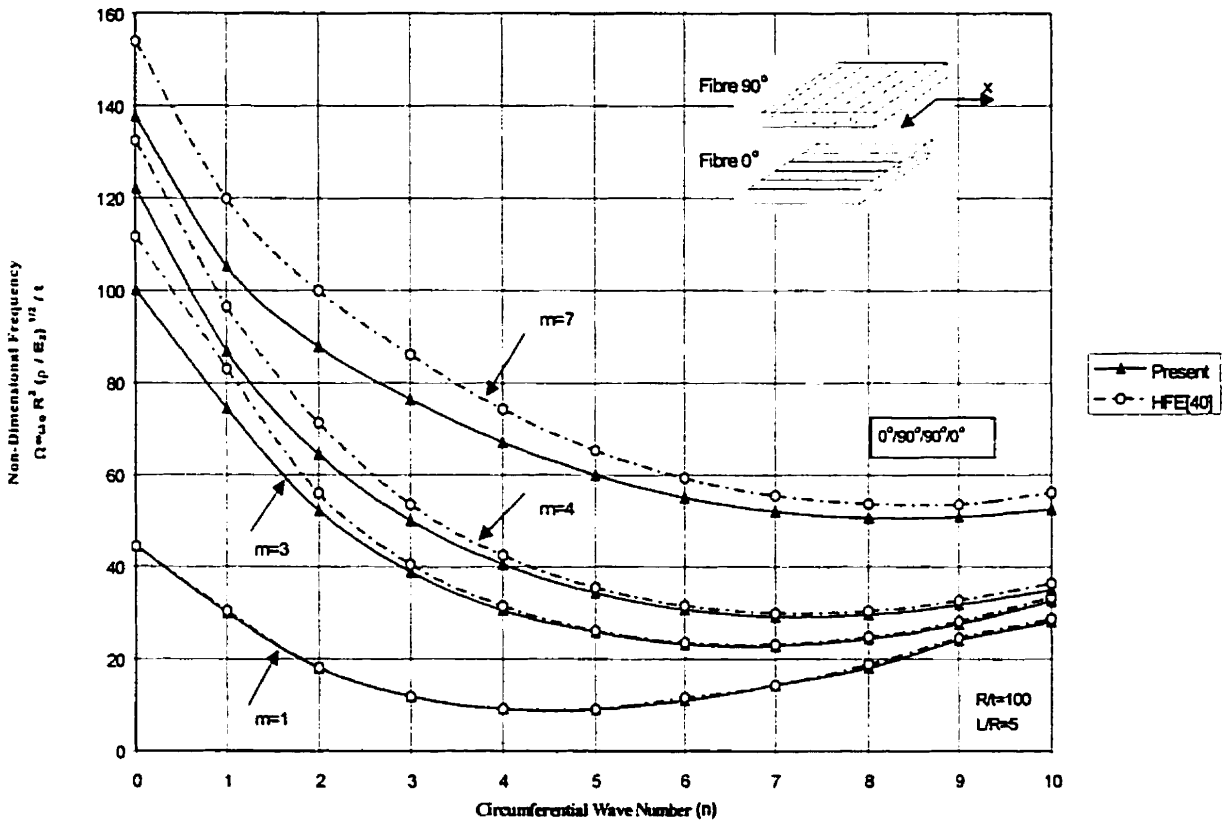

Figure 3.7 Frequency distribution ($\Omega=\omega_o R_2(\rho/E_2)^{1/2}/t$) for various axial wave number (*m*) for anisotropic (0° /90° /90°/ 0°) cylinder (Anisotropic Materials).

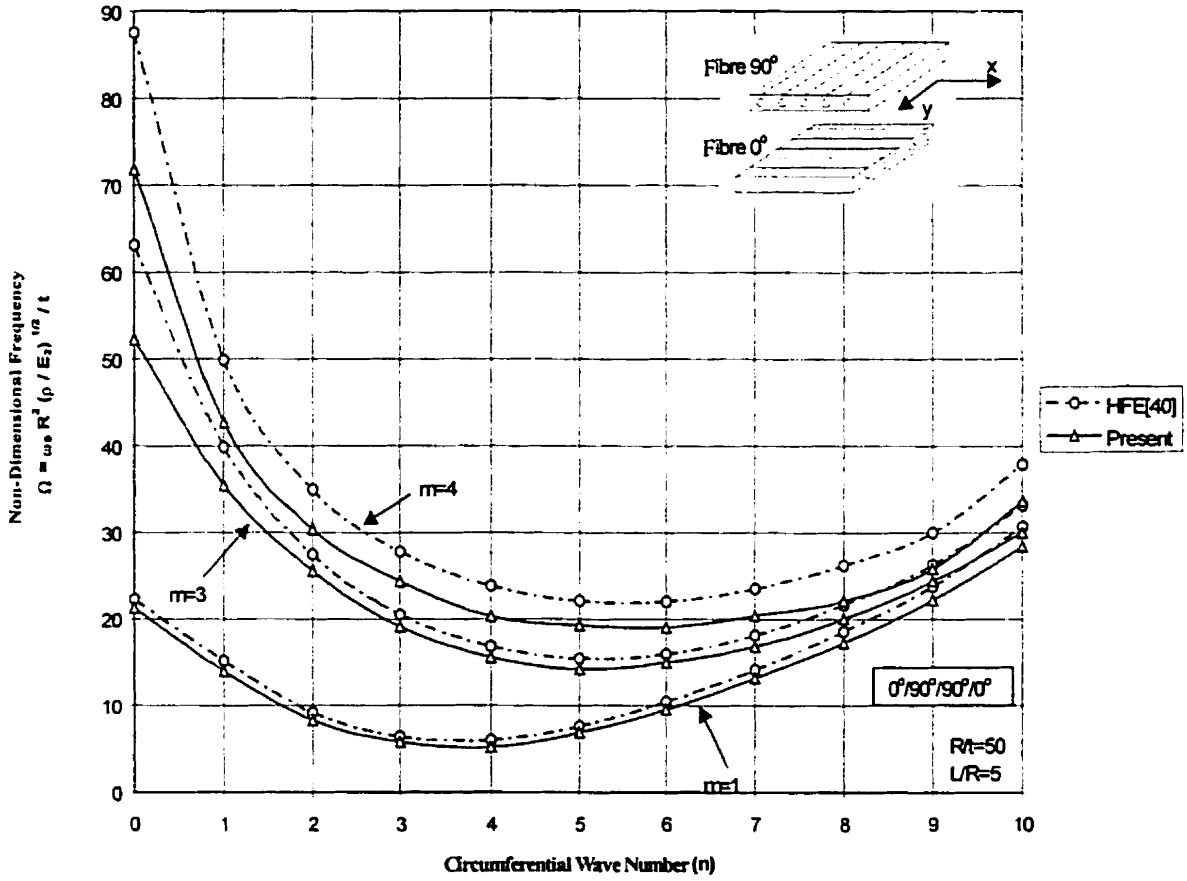

Figure 3.8 Variation of non-dimensional natural frequencies (Ω) in conjunction with variation of (m) (Anisotropic Materials).

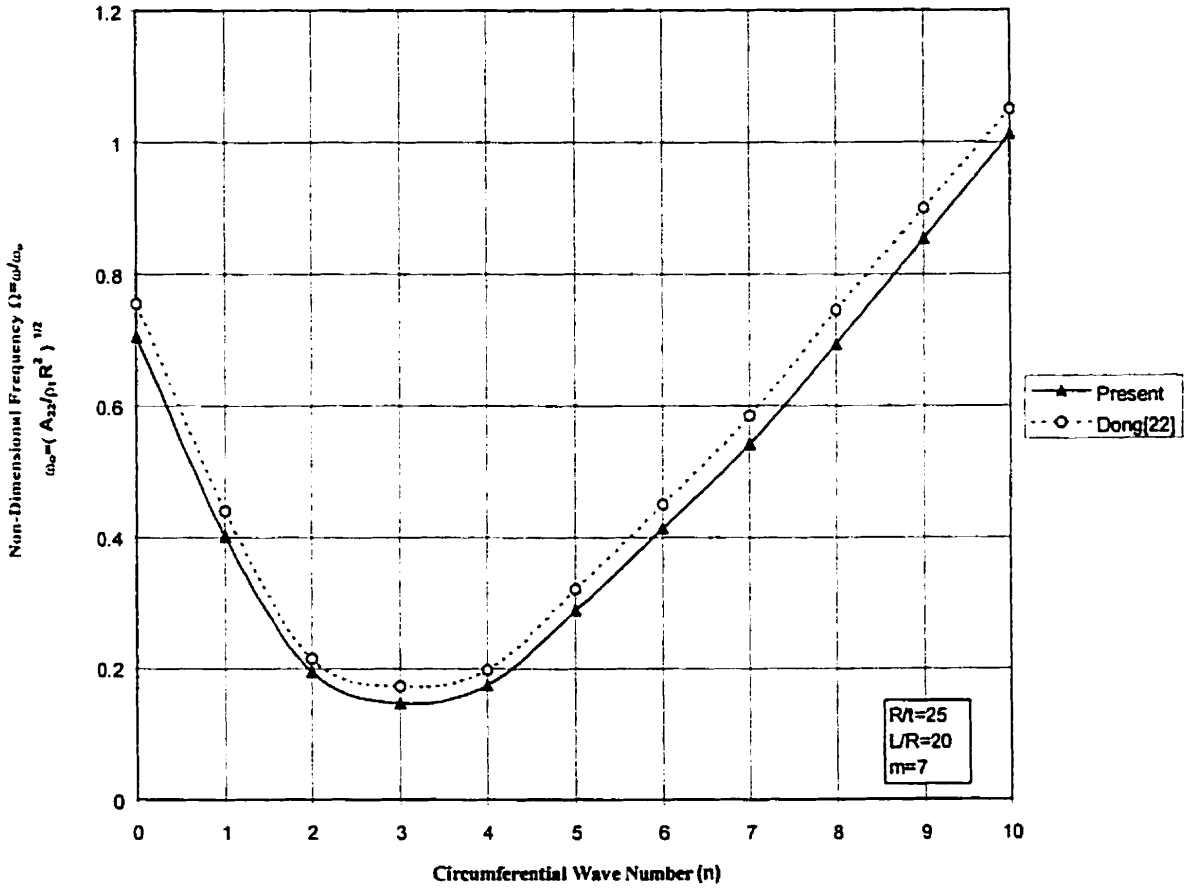

Figure 3.9 Variation of non-dimensional frequencies Ω in terms of the (n) variations (Orthotropic Materials).

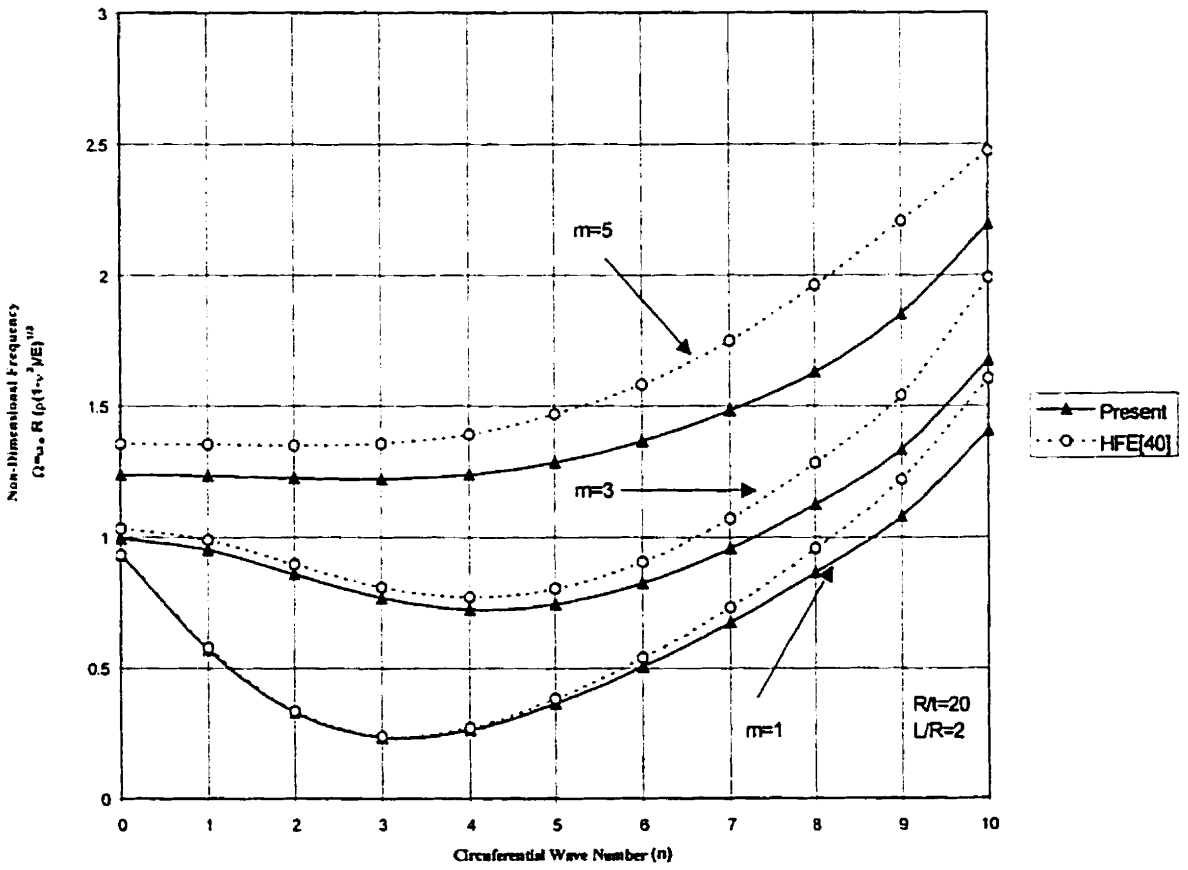

Figure 3.10 Variation of non-dimensional natural frequencies (Ω) in terms of the circumferential and axial mode numbers (n,m) (Isotropic Materials).

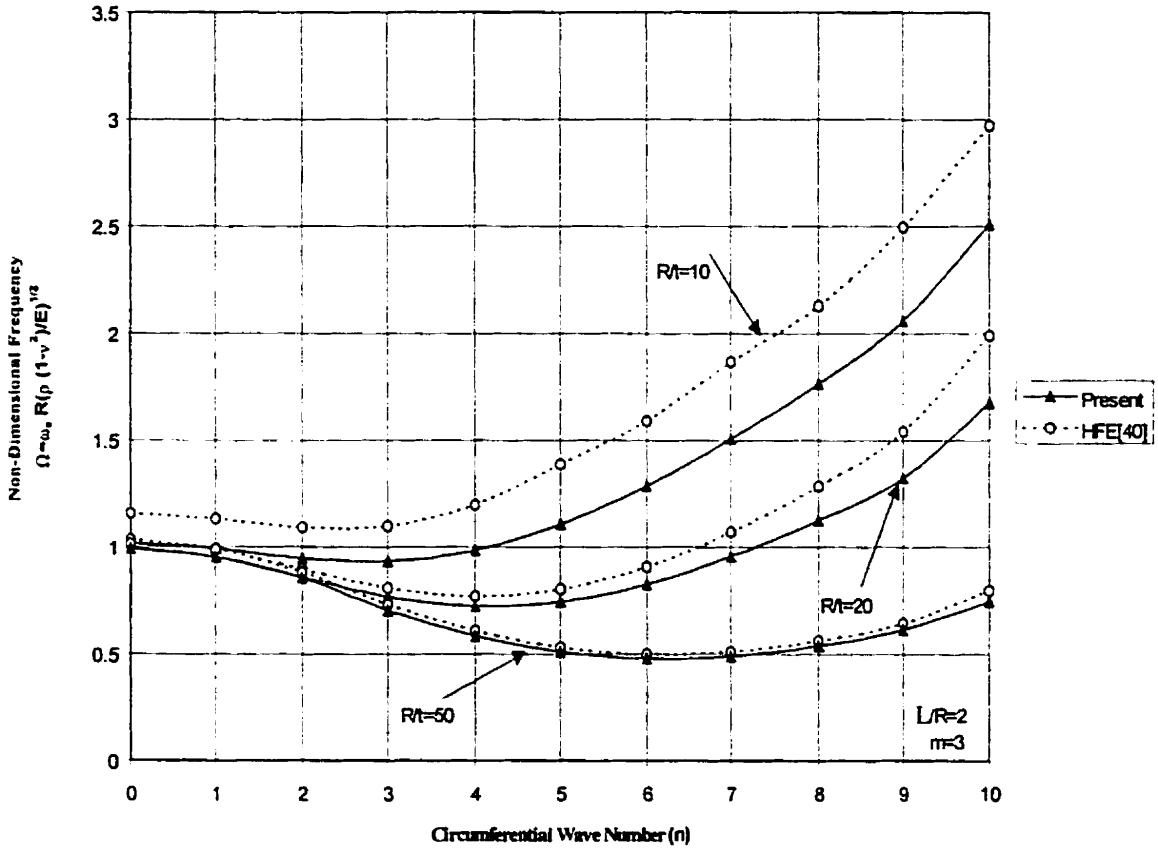

Figure 3.11 Variation of non-dimensional natural frequencies (Ω) in terms of the (n) and R/t variations (Isotropic Materials).

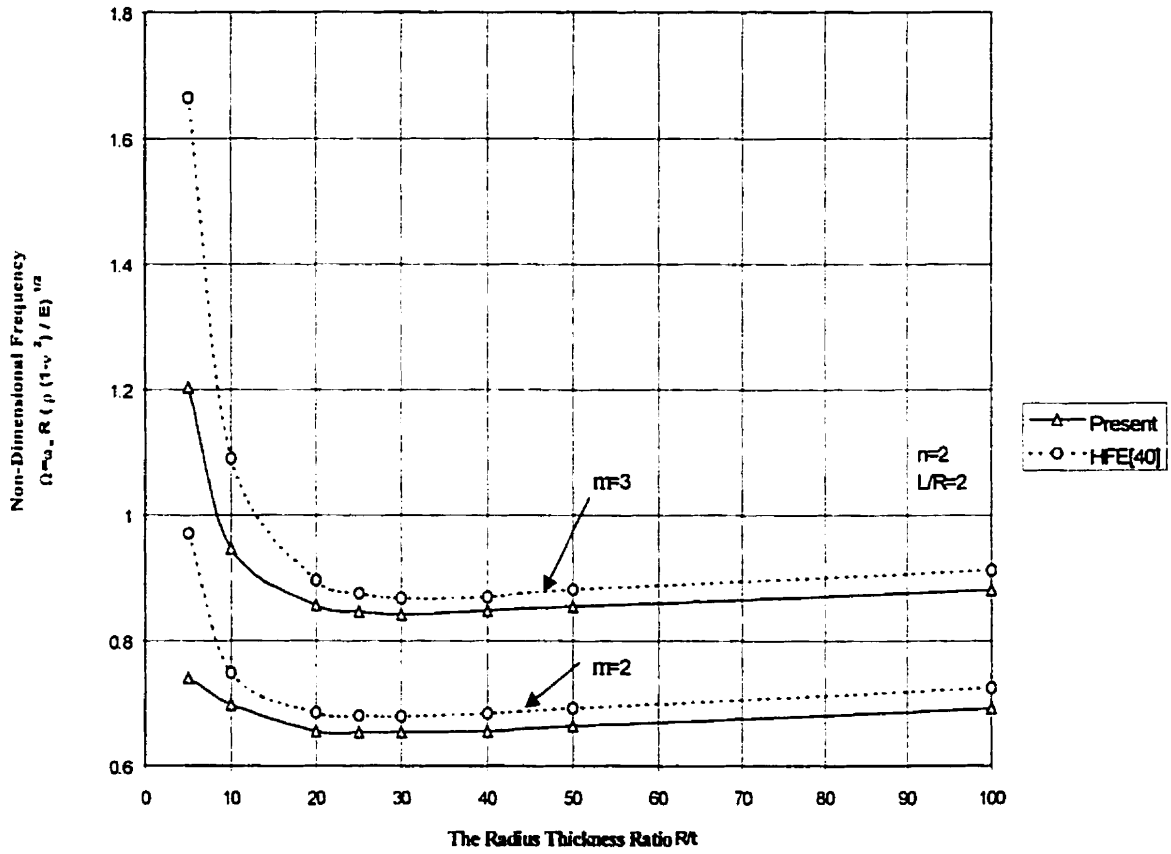

Figure 3.12 Variation of non-dimensional natural frequencies (Ω) in conjunction with **R/t** and (**m**) Variations (Isotropic Materials).

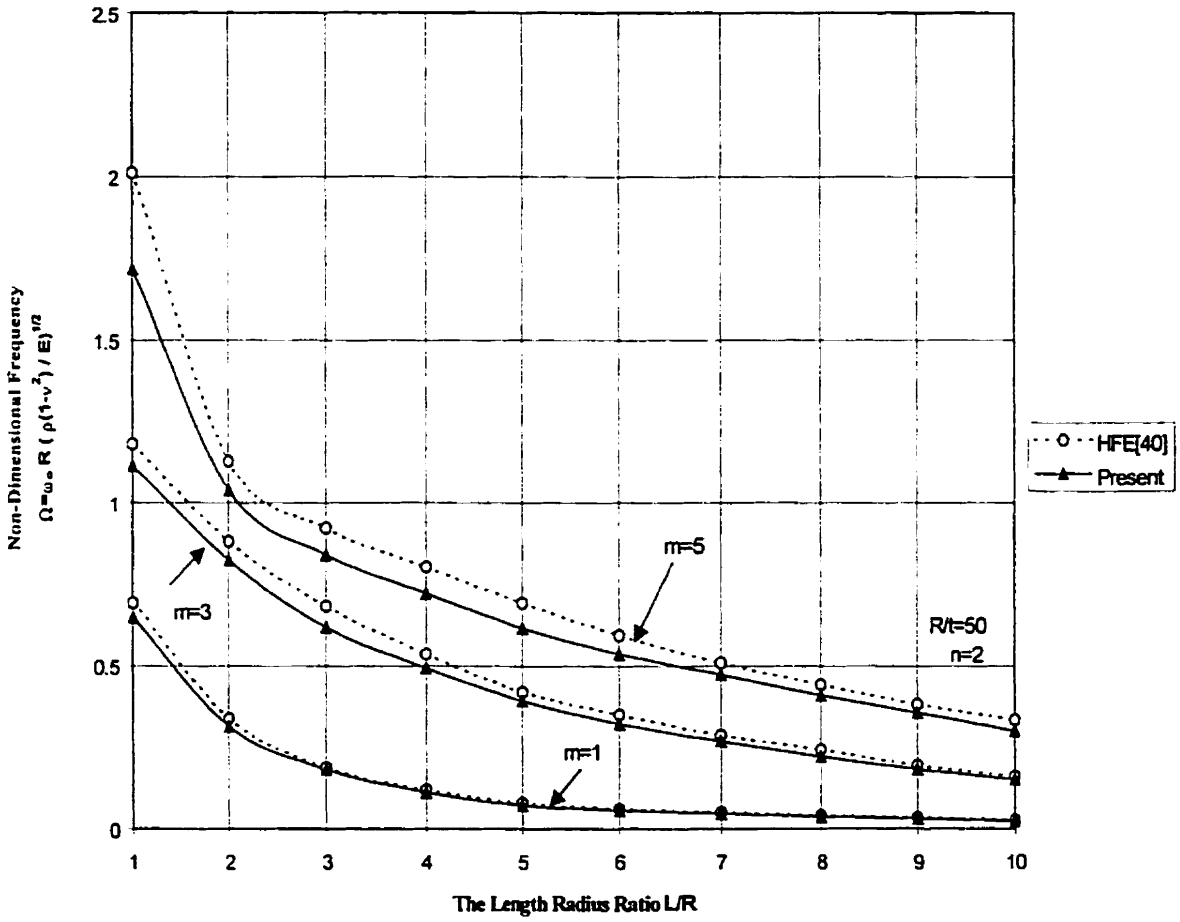

Figure 3.13 Variation of non-dimensional natural frequencies (Ω) in terms of ***L/R*** and (***m***) variations (Isotropic Materials).

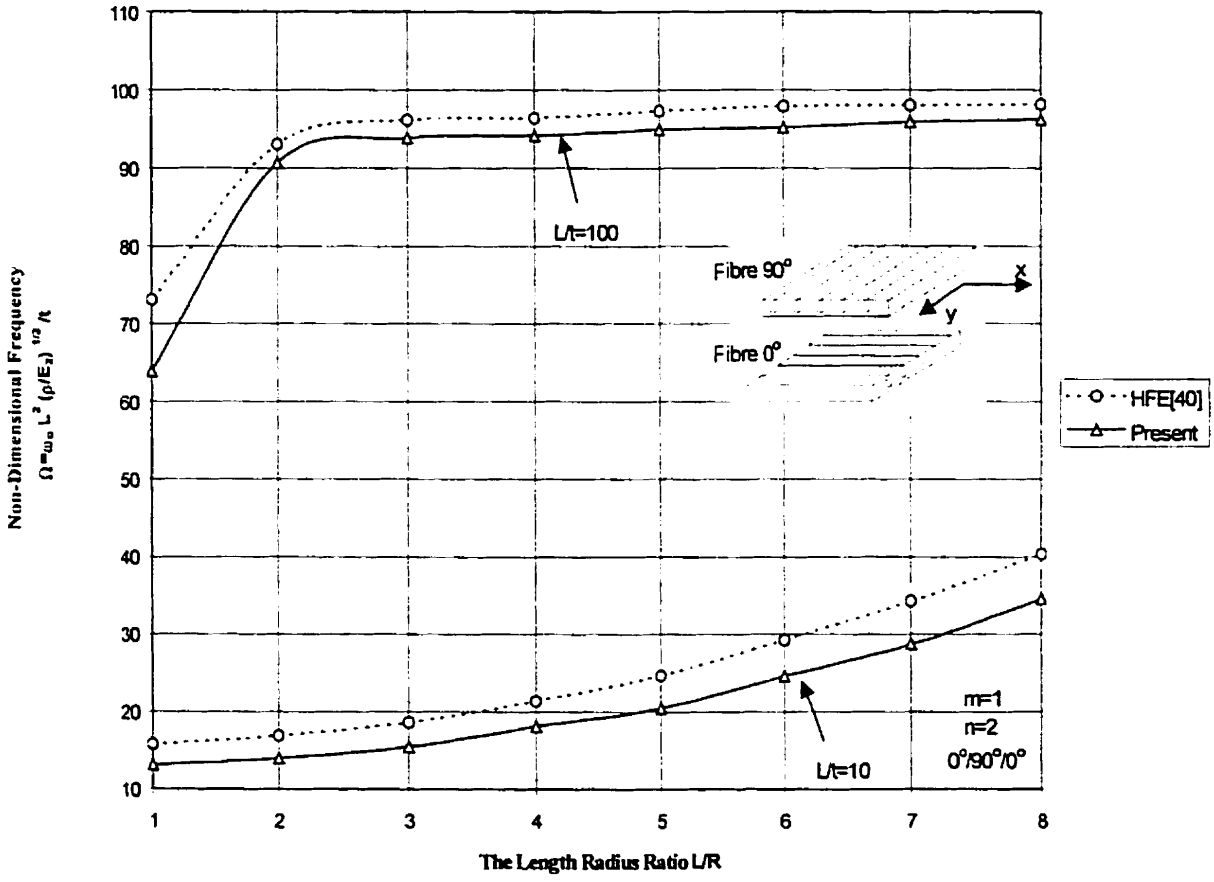

Figure 3.14 The effect of the length to thickness ratio on the non-dimensional frequencies (Ω) of three layered anisotropic cylindrical shells (Anisotropic Materials).

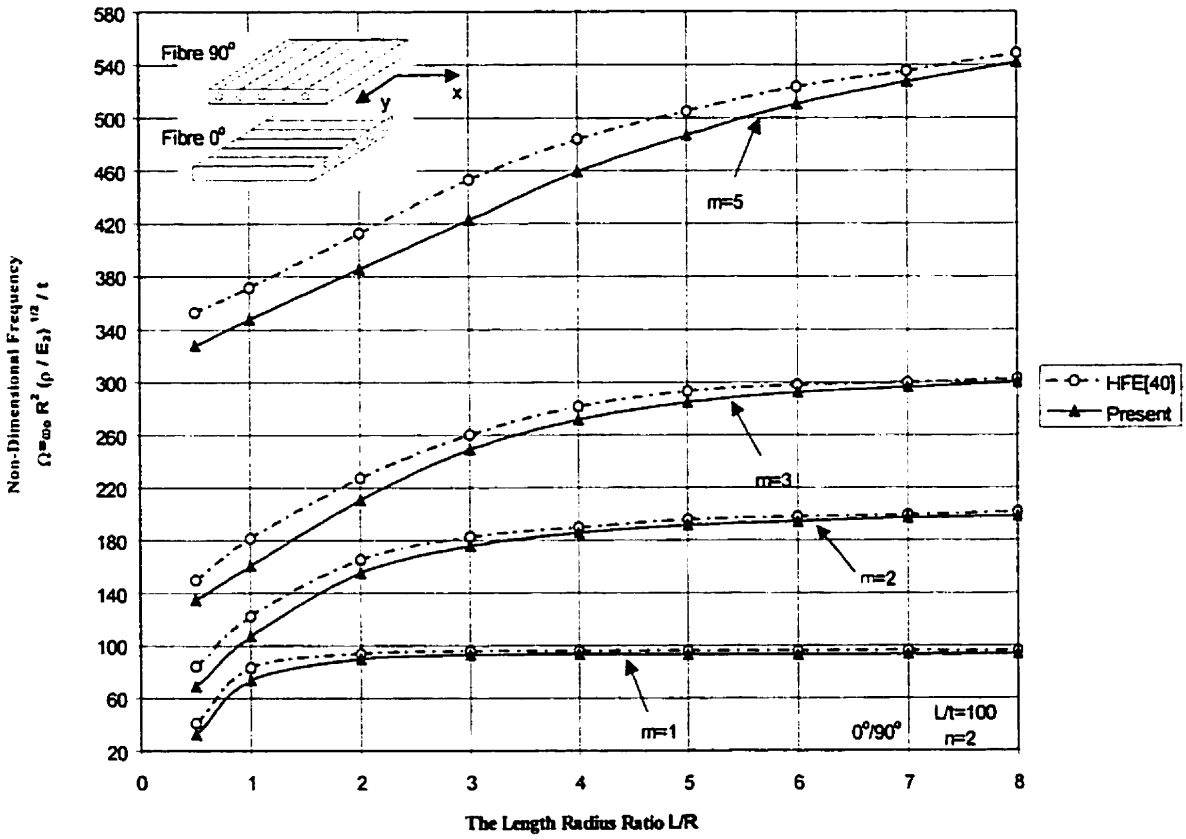

Figure 3.15 Variation of non-dimensional natural frequencies (Ω) of anti-symmetric cross-ply laminated cylindrical shells in conjunction with (***L/R***) and (***m***) variations (Anisotropic Materials).

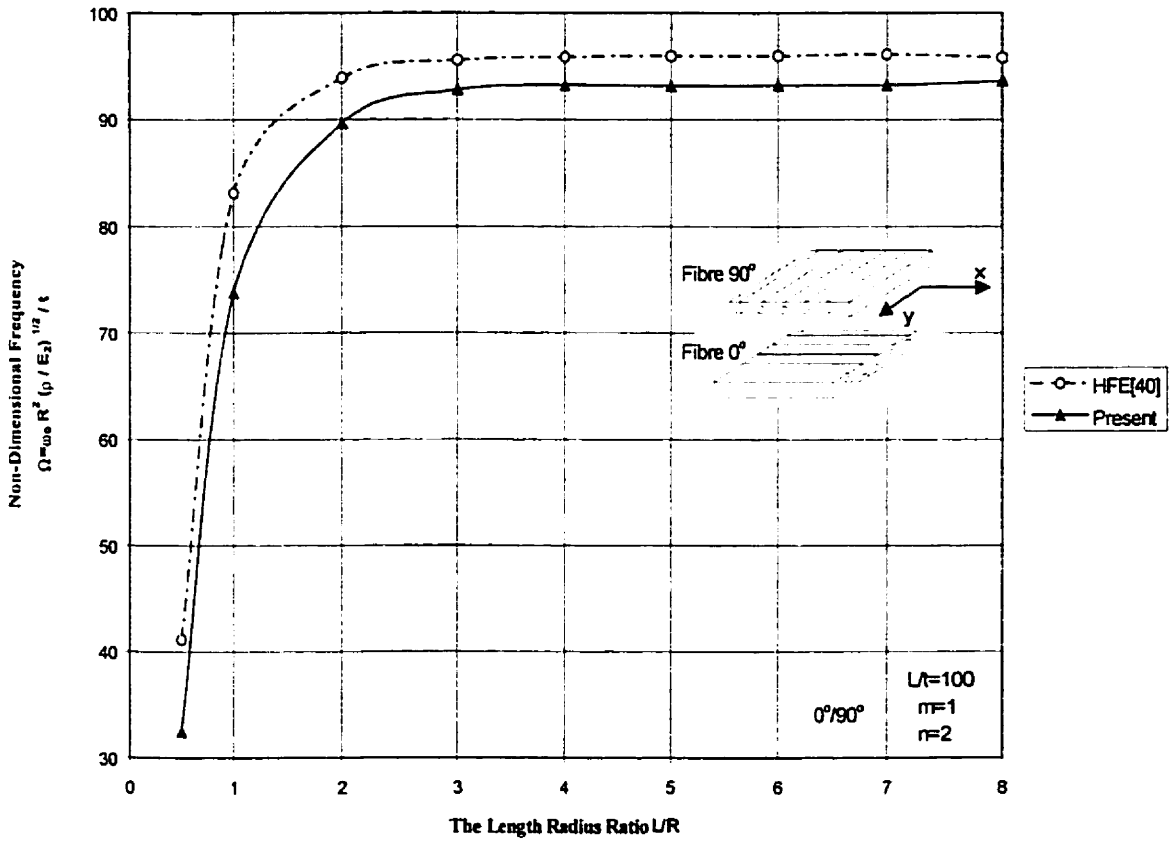

Figure 3.16 Variation of non-dimensional natural frequencies (Ω) of cross-ply cylindrical shells in terms of ***L/R***'s variations (Anisotropic Materials).

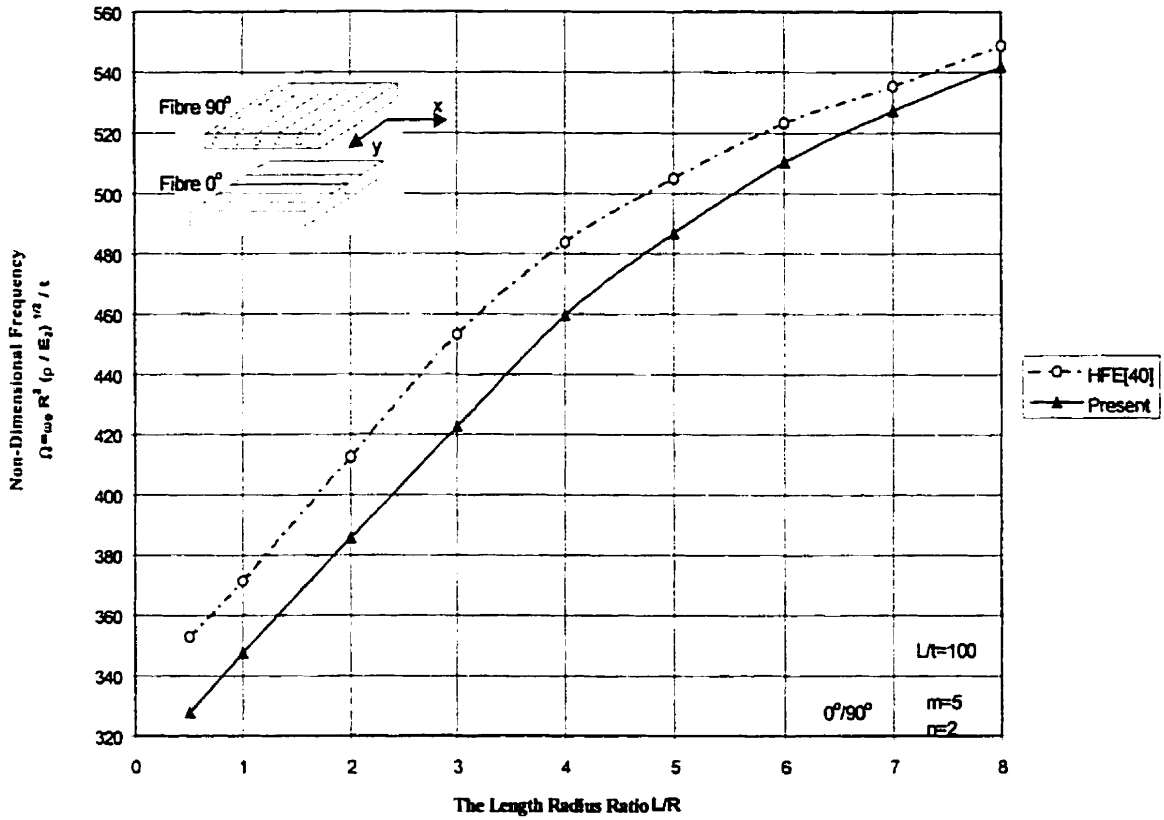

Figure 3.17 Variation of non-dimensional natural frequencies (Ω)of cylindrical shells in terms of ***L/R***'s variations (Anisotropic Materials).

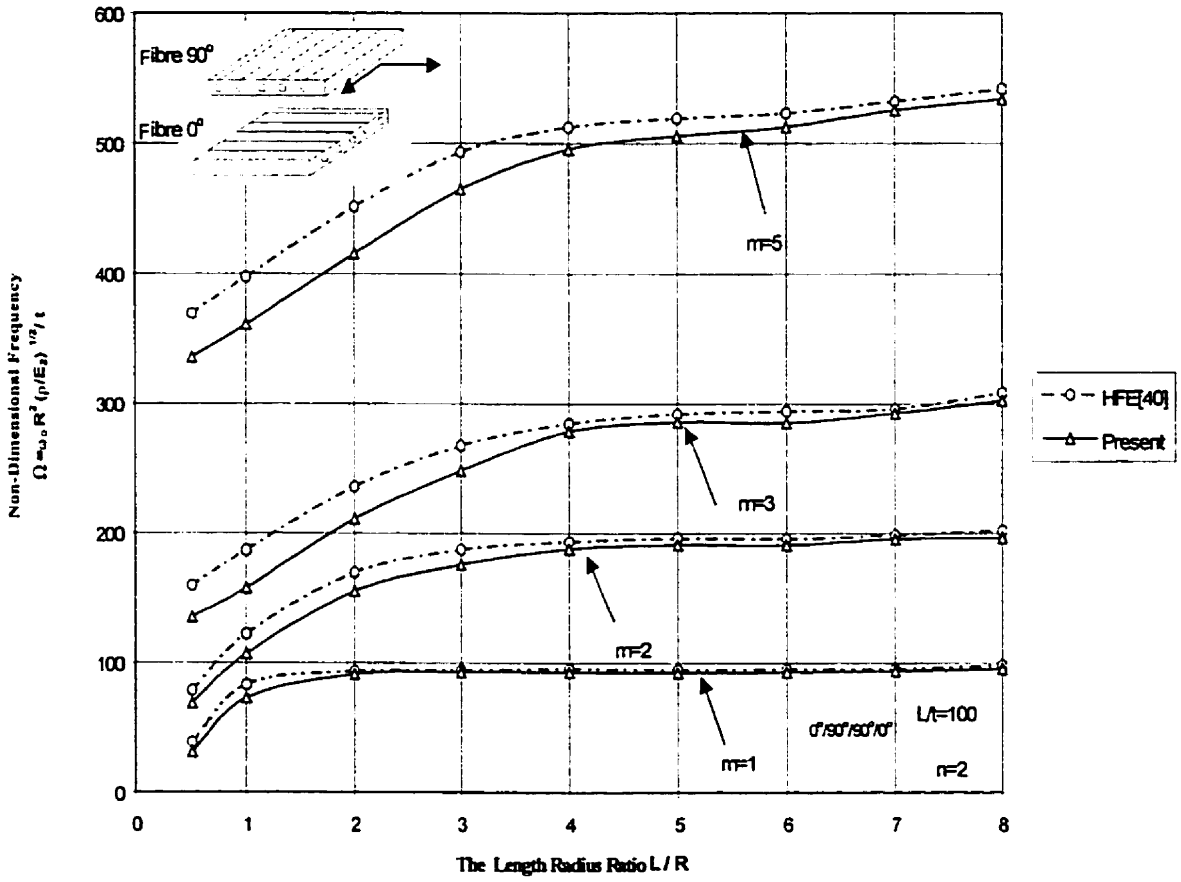

Figure 3.18 Frequency distributions (Ω) for various axial mode numbers of symmetric cross-ply laminated cylindrical shells (Anisotropic Materials).

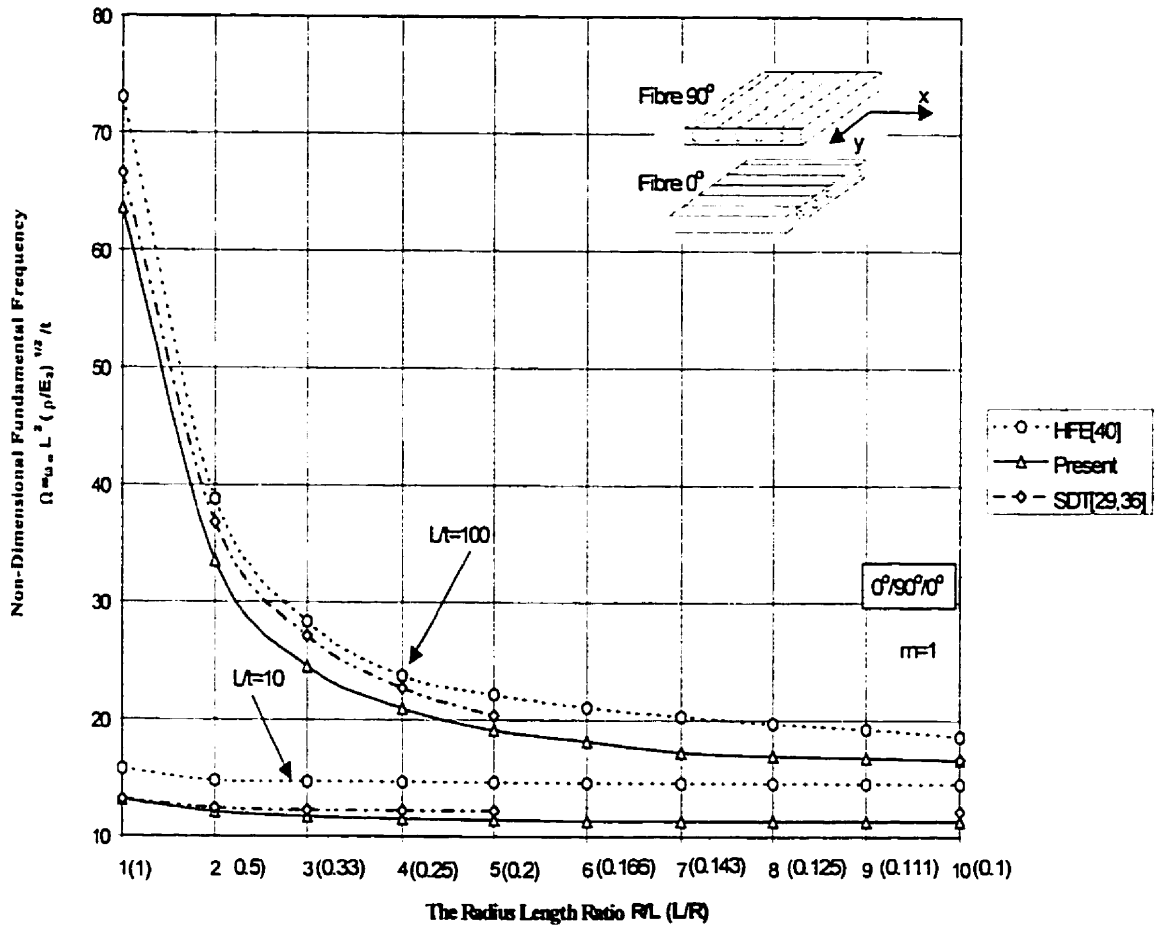

Figure 3.19 Variation of non-dimensional natural frequencies (Ω) of cross-ply cylindrical shells in conjunction with (L/R) and (L/t) variations (Anisotropic Materials).

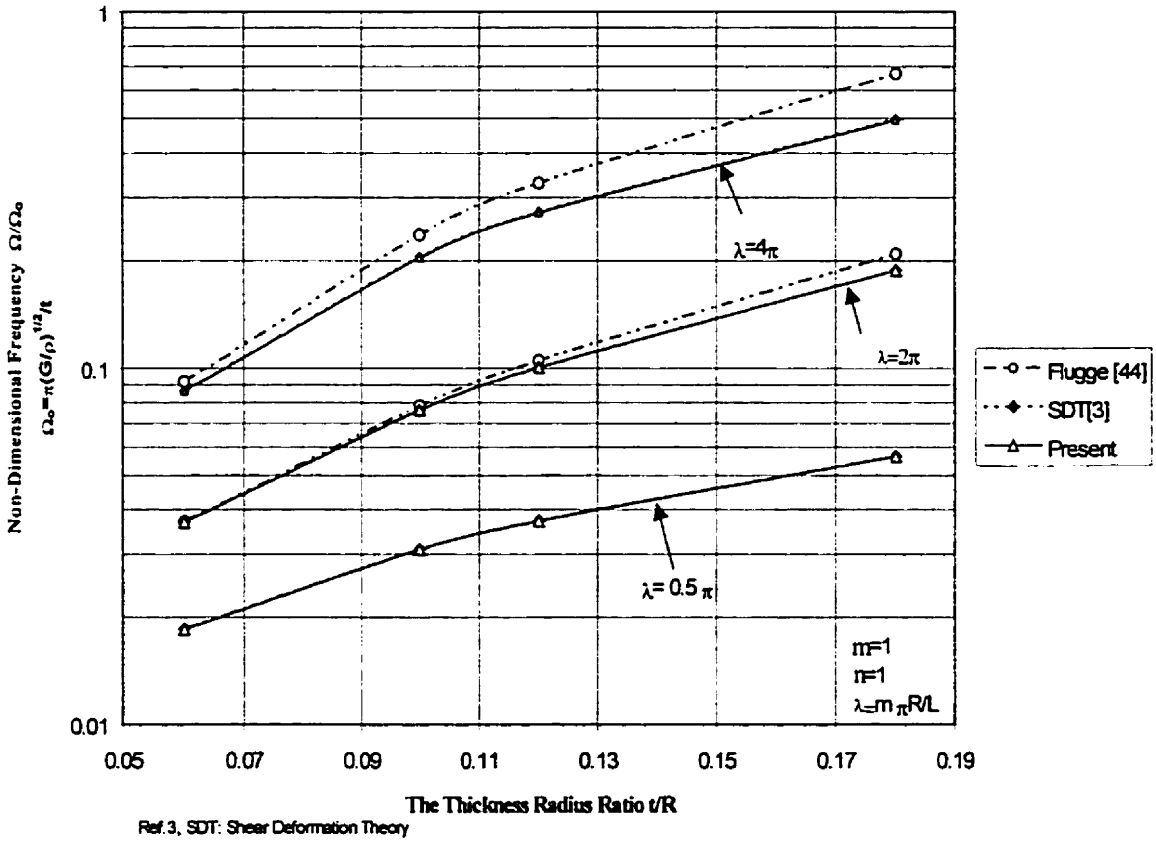

Ref.3, SDT: Shear Deformation Theory

Figure 3.20 Frequency distributions (W) for various axial mode numbers in terms of ***t/R***'s variations (Isotropic Materials).

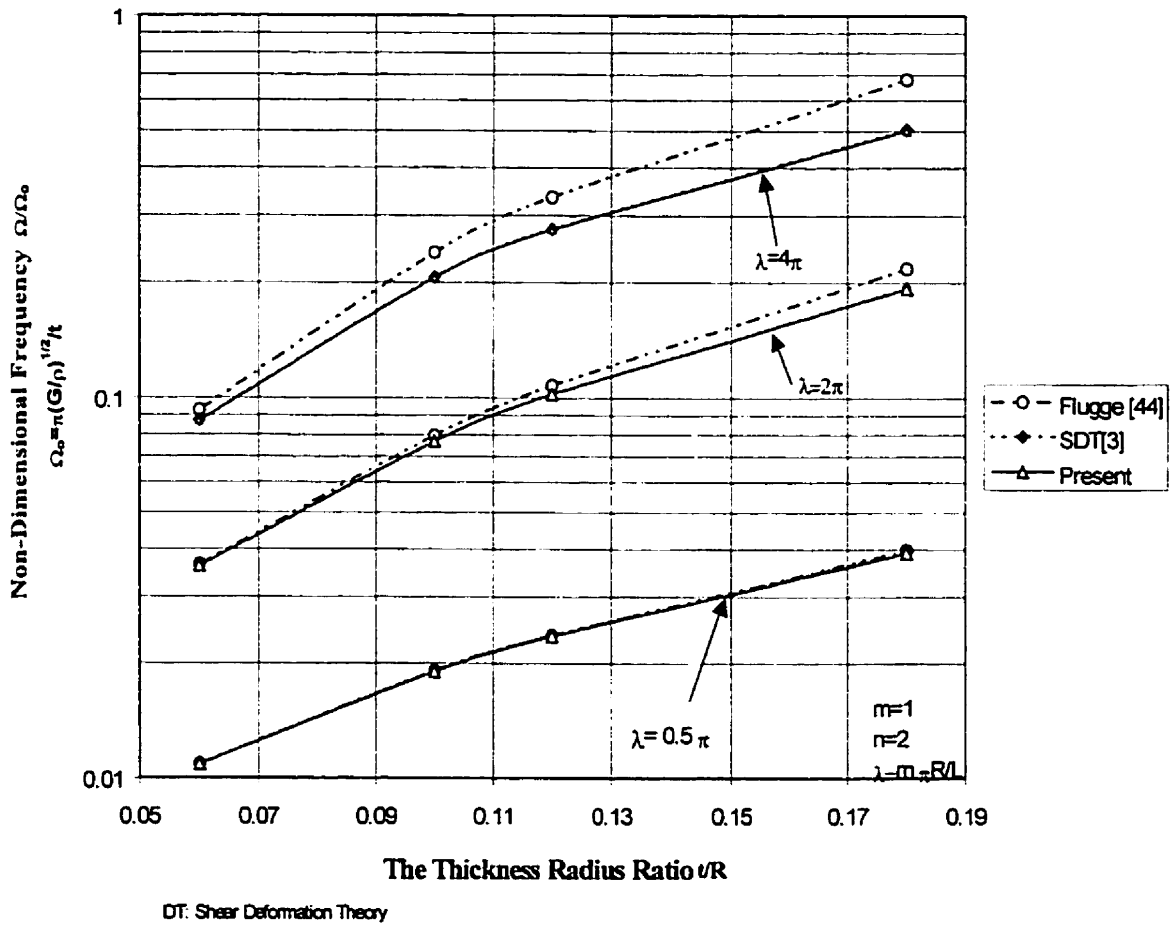

DT: Shear Deformation Theory

Figure 3.21 Frequency distribution (Ω) for various axial mode number in terms of ***t/R***'s variations (Isotropic Materials).

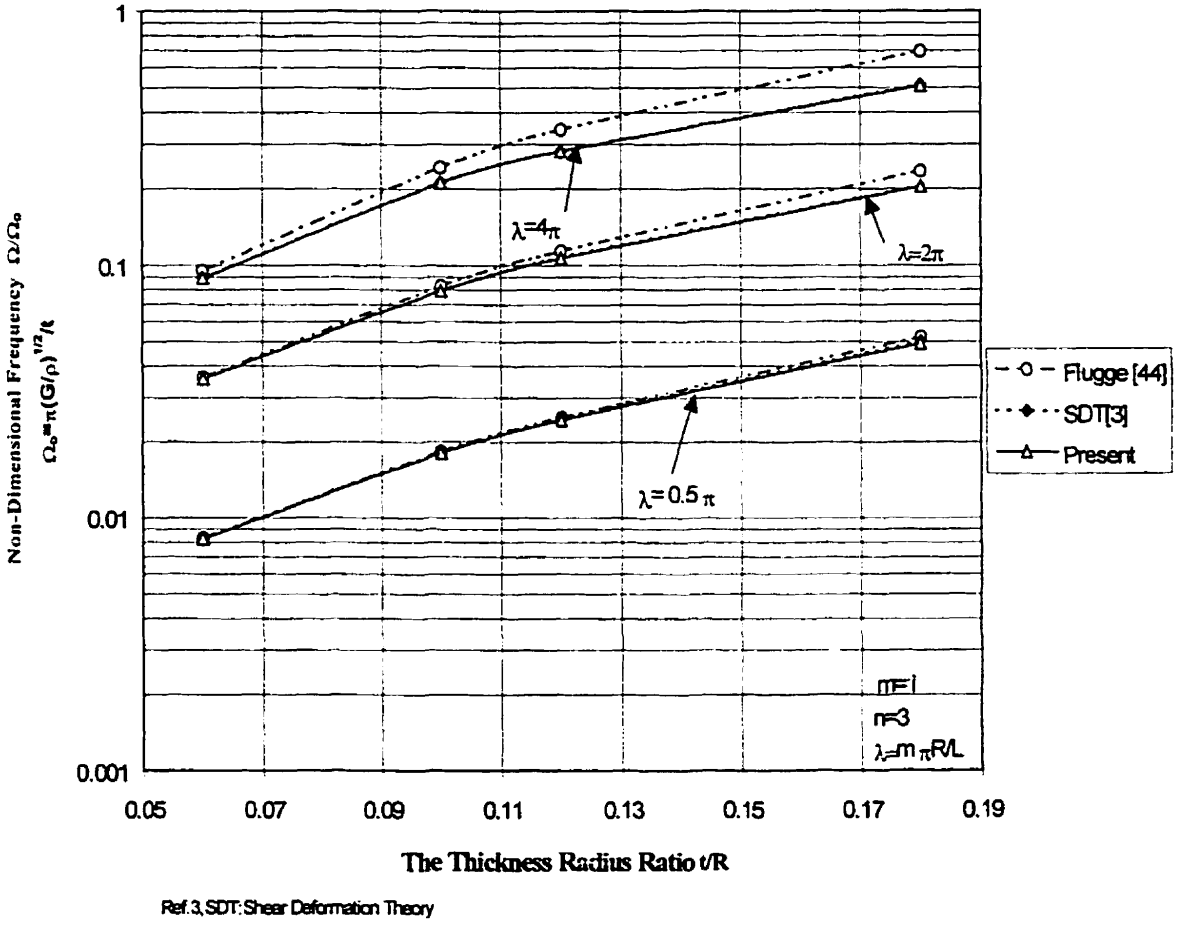

Figure 3.22 Frequency distribution (Ω) for various axial mode number in terms of ***t/R***'s variations (Isotropic Materials).

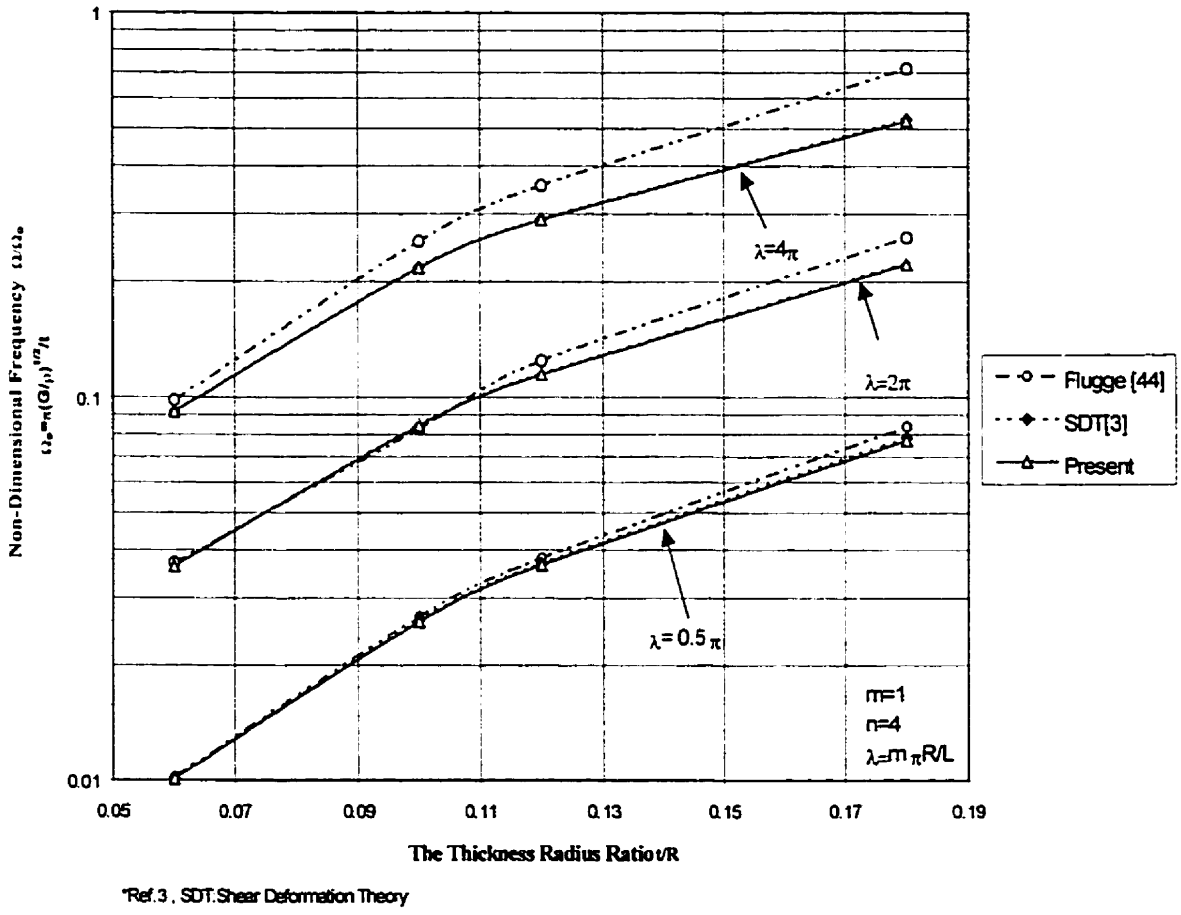

Figure 3.23 Frequency distribution (Ω) for various axial mode number in terms of *t/R*'s variations (Isotropic Materials).

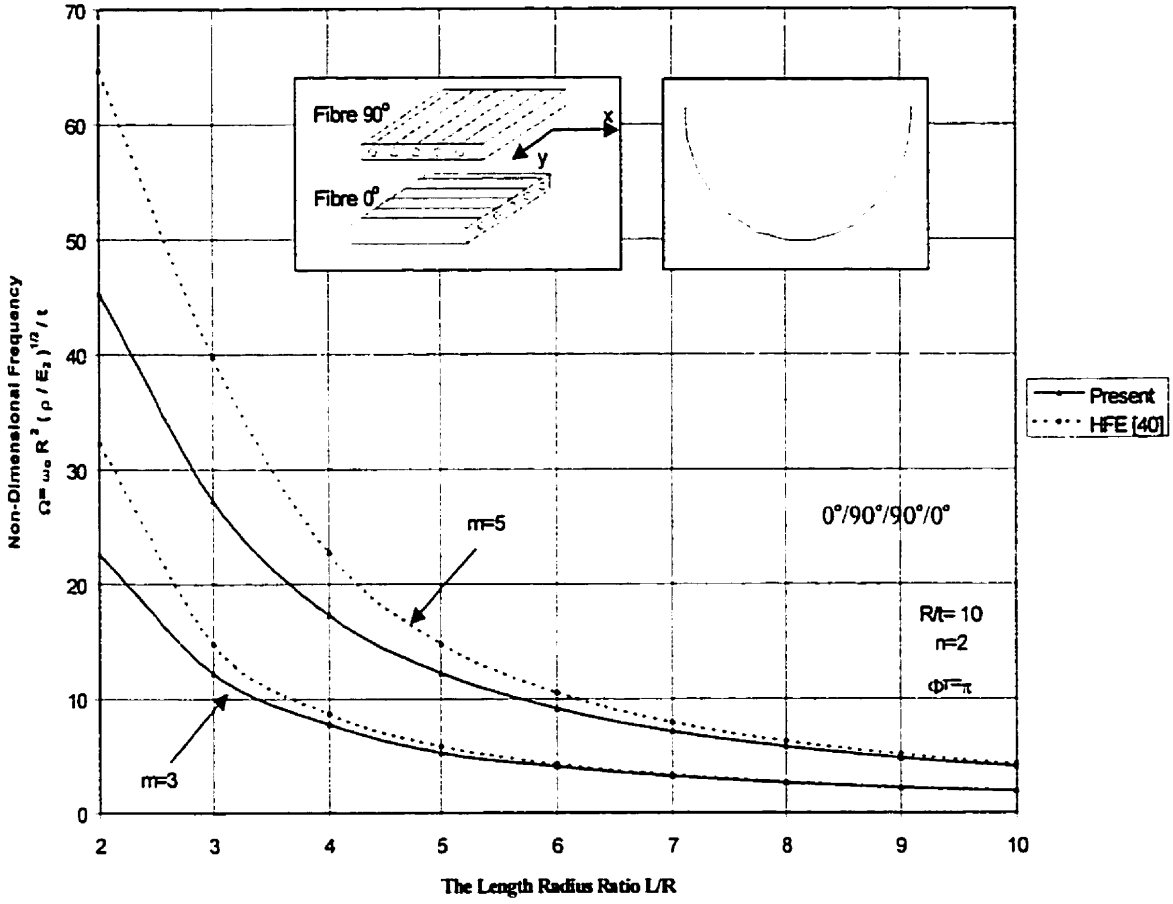

Figure 3.24 Variation of non-dimensional frequencies (Ω) of a cross-ply open cylindrical shell for various number of ***L/R*** and ***m*** (Anisotropic Materials).

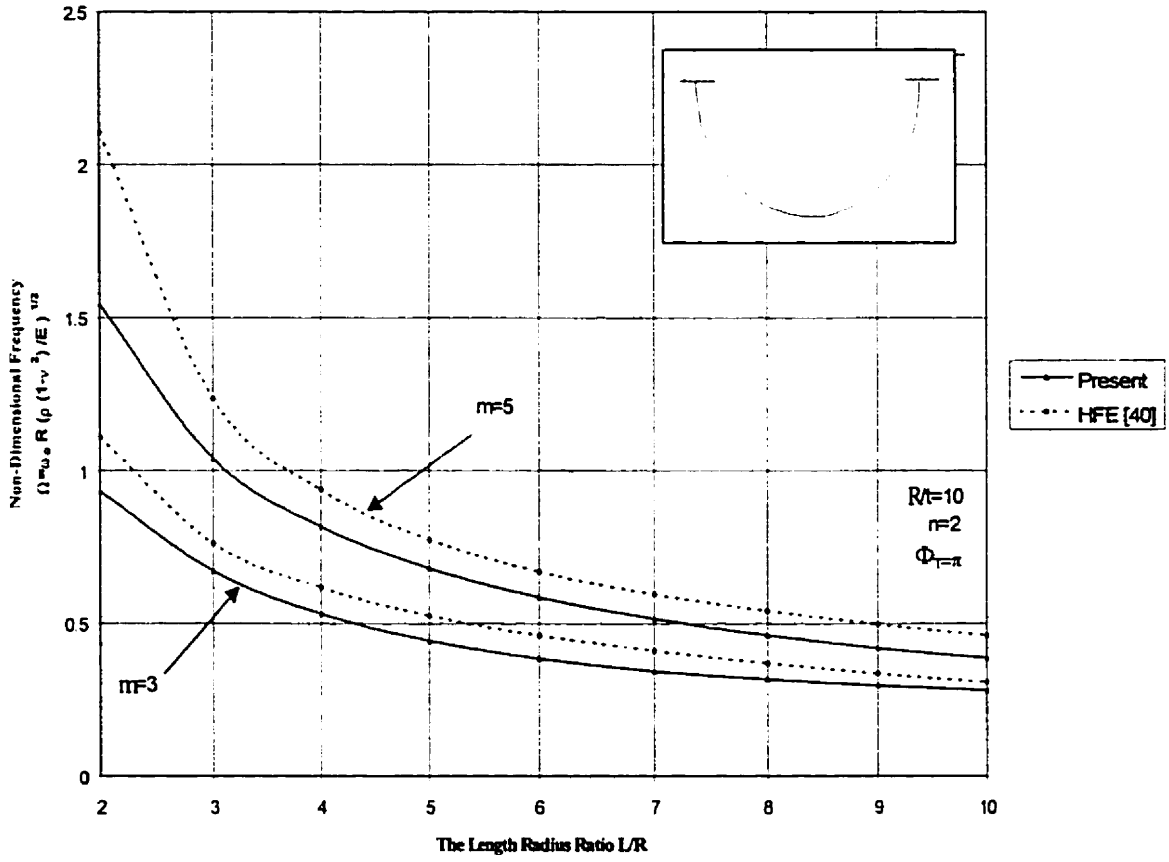

Figure 3.25 Frequency distributions (Ω) of an open cylindrical shell in conjunction with ***L/R*** and ***m*** variations (Isotropic Materials).

CHAPITRE IV

SHEAR DEFORMATION IN DYNAMIC ANALYSIS OF ANISOTROPIC LAMINATED OPEN CYLINDRICAL SHELLS FILLED WITH OR SUBJECTED TO A FLOWING FLUID*

M. H. Toorani and A. A. Lakis

Département de Génie Mécanique, École Polytechnique de Montréal

Case Postale 6079, Succ. Centre-ville, Montréal, Canada H3C 3A7

4.1 Abstract

The free vibration of anisotropic laminated composite, as well as isotropic open or closed, cylindrical shells submerged in and subjected simultaneously to an internal and external incompressible, inviscid fluid are discussed on the basis of a refined shell theory in which the effects of transverse shear deformations, rotatory inertia and initial curvature are taken into account. The shell may be uniform or non-uniform in the circumferential direction. In this approach, displacements and rotations of the shell and the dynamic pressure

---

★: soumis pour publication dans "Journal of Computer Methods in Applied Mechanics and Engineering"

of the fluid are modeled by a hybrid finite element method. The displacement functions are derived from the exact solution of refined shell equations based on orthogonal curvilinear coordinates. The velocity potential and Bernoulli's equation have been used to describe an expression for fluid pressure which yields three forces (inertial, centrifugal and Coriolis) of the moving fluid. The mass, stiffness and damping matrices due to the fluid effect can be obtained by an analytical integration of the fluid pressure over the liquid element. Extensive results are given of computations carried out to illustrate the theory and dynamic behaviour of open and closed cylindrical shells partially or completely filled with liquid, as well as subjected to a flowing fluid. A satisfactory agreement is seen between the numerical results predicted by the present theory and the results of existing available other theories.

KEY WORDS: **Vibration, Shear Deformation, Open Cylindrical Shells, Flowing Fluid, Anisotropic**

4.2 Introduction

The effect of the surrounding medium (air, liquid, etc.) upon the vibration of plates and shells is of primary interest to scientists and engineers working in aerospace, marine and reactor technology. Fluid-filled shells have been extensively used in various sectors of the engineering industry, e.g. aerospace, petrochemical, maritime technology, civil engineering,

nuclear power reactors, power generation, etc. The presence of fluid has a significant and complex influence on the dynamic structural behaviour. Knowledge of the dynamic behaviour of fluid-shell interaction is, therefore, very important in the design of pressure vessels, fuel tanks, etc., as well as in seismic response studies of liquid storage tanks.

The hydrodynamic coupling between fluid and structure can be evaluated as the sum of the hydrodynamic pressure distribution and the force exerted by free surface motion. These effects are shown in a hydrodynamic mass matrix which can then be added to the shell mass matrix. The hydrodynamic mass is frequency-dependent except when the fluid is assumed to be incompressible. In the case of a flowing fluid, the fluid pressure expression is a function of the nodal displacements of the elements and three forces (inertial, centrifugal and Coriolis) of the moving fluid in which the first two are added, respectively, to the mass and stiffness matrices.

The effective mass can be a function of the mode shape being studied, the geometrical and physical parameters of shell and fluid. The speed of sound in the fluid and the frequency of vibration may influence the added mass matrix when the liquid is taken as compressible.

Cylindrical shells are a common shell configuration and have been used extensively as pressure vessels, piping, container and structural members in diverse engineering applications, such as the aerospace, nuclear and maritime industries. For this reason, the

dynamic characteristics of these fluid-loaded shells have been extensively studied and, over the last two decades, have become an active area of engineering research.

A number of theories for the study of fluid-structure interaction are to be found in the literature. The free vibration of a fluid-filled circular cylindrical shell made of isotropic materials and filled with fluid has been well studied on the basis of classical shell theory. In modern engineering design, shell elements made up of advanced composite materials are being used extensively because of their advantageous stiffness-to-weight and strength-to-weight ratios.

An excellent literature review of the subject is outlined in [1,2]. The free and forced vibrations of cylinders submerged in an acoustic medium have been analyzed by Junger[3]. The problem was subsequently developed by Bleich and Baron[4] and Greenspon [5]. In these investigations, where isotropic shells were concerned, the effects of fluid media on the motion of cylindrical shells have been described. A survey of the hydro-dynamic response of fluid-coupled coaxial cylinders under small displacements was made by Brown[1]. Compressible fluids such as gases were not considered in his work.

The free vibration of simply-supported cylindrical shells partially filled with or submerged in a compressible and non-viscous fluid has been analyzed by Gonçlaves and Batista [6], on the basis of Sanders' shell theory. They used the Rayleigh-Ritz method to obtain an approximate solution to the problem. The effects of variable fluid height and shell

geometric parameters on the natural frequencies were investigated.

The vibration behaviour of cylindrical shells, made of isotropic and transversely isotropic materials, filled partially or completely with an incompressible, non-viscous fluid was studied by Jain [7]. The free vibration behaviour of cylindrical storage tanks of variable thickness and partially filled with liquid has been investigated by Han and Liu [8] on the basis of Flügge's thin shell theory. The transfer matrix approach is suggested when solving the problem of variable wall thicknesses.

A combination of the hydrodynamic mass method and the hybrid finite element formulation was used by Brennemean and Yang [9] to solve coupled fluid-structure dynamic problems. Analysis of the breathing vibrations of a partially filled cylindrical tank was carried out by Wen-Hw-Chu [10] using Galerkin's technique. The free axisymmetric vibrations of cylindrical shells under hydrodynamic pressure due to external and internal fluids were studied by Endo and Tosaka[11] on the basis of Flügge's theory.

The effects of the fluid medium on the vibrations of cylindrical shells have been studied by Ramachandran [12], Crouzet-Pascal and Garnet [13], Au-Yang [14] and Païdoussis and Li [2]. The effects of unsteady fluid forces and steady viscous forces on the stability of a simply-supported cylindrical shell coaxially located in a rigid cylindrical pipe and subjected to axial flow have been studied by A.El Chebair and Mirsa[15], using a modified version of Flügge's shell theory and Galerkin's method to solve the equations of

motion. A summary of several proposed methods of calculating the natural frequencies of plates and shells with various boundary conditions is given in [16]. Some numerical methods such as the finite element approach and modal reduction procedures were presented by Morand and Ohayon [17] for the linear vibration analysis of elastic structures coupled to internal fluids.

Lakis and Païdoussis [18] used numerical methods to investigate thin circular cylindrical shells partially or completely filled with stationary liquid. An analytical method for studying the non-linear vibration of anisotropic cylindrical shells containing a flowing fluid was presented by Lakis and Laveau [19]. The same method was applied to the free vibration analysis of fluid-filled anisotropic conical shells and the determination of the free vibration characteristics of axisymmetric and beam-like cylindrical shells partially filled with liquid [20,21].

Selmane and Lakis [22-25] also presented this method in the analysis of the free vibration of anisotropic open cylindrical shells subjected to a flowing fluid. It should be pointed out that in the above-mentioned references a hybrid finite element, a combination of the finite element method and classical shell theory, has been developed by Lakis et al. [18-35] for use in numerical analysis.

This hybrid approach has been applied with satisfactory results to both the dynamic linear and non-linear analysis of cylindrical (Lakis &Païdoussis[18, 26, 27], Lakis [28],

Lakis and Sinno [20], Lakis and Laveau [19], Lakis, Sami & Rousslet [29], Selmane & Lakis [22-25]), conical (Lakis et al [21]) and spherical (Lakis et al. [30]) isotropic and anisotropic uniform and axially non-uniform shells both empty and filled with liquid.

The free vibration of an isotropic, simply-supported circular cylindrical shell, with the axis placed horizontally and partially filled with liquid was studied by Amabili [36] following classical shell theory. The equations used were taken from Donnell's bending shell theory and Ritz method was used to obtain the natural frequencies and mode shapes of structures.

Numerous papers have been written on the free vibration of fluid-filled cylindrical shells, on the basis of various shell theories. However, no work based on refined shell theory appears to have been done on the problem of anisotropic, laminated, open, cylindrical shells, partially or completely filled with or subjected to a flowing fluid, in which the effects of transverse shear deformations, rotatory inertia and initial curvature are retained.

The primary purpose of this work is to develop an efficient method for the study of the free vibration characteristics of open, thin, non-uniform and anisotropic laminated cylindrical shells containing flowing fluid. The structure may be uniform or non-uniform in the circumferential direction. Since the fluid is assumed to be inviscid, incompressible and irrotational, the velocity potential function is used to describe the fluid flow.

The method is a hybrid of the finite element method, refined shell theory (in which transverse shear deformation, rotatory inertia and initial curvature effects are taken into account) and fluid dynamic theory. This method is more accurate than the more usual finite element methods based on polynomial displacement functions because the displacement functions are derived from refined theoretical equations of cylindrical shells [34,35].

In this approach, the mass and stiffness matrices of individual finite elements are derived by exact analytical integration. The mass, stiffness and damping matrices for a fluid element are obtained by analytical integration for the pressure distribution along the element. Hence, the influence of the variable fluid height and the boundary conditions on the vibration response of fluid-filled cylindrical shells can be studied.

4.3 Structural Formulation

4.3.1 Basic equations of the shell

Consider an anisotropic, laminated, composite, circular, cylindrical shell filled with or subjected to a flowing fluid (Figure 4.1). A coordinate system is adopted with axes (x, θ, R) in the axial, circumferential and radial directions. The displacements are (u, v, w) respectively, and the two rotations are (β_x and β_θ) tangent to the reference surface. L, R and t denote length, mean radius and thickness of shell, respectively. Based on Green's exact strain-displacement relations expressed in arbitrary orthogonal curvilinear coordinates, the strain-displacement relations for the shell are given by [35]:

$$\{\varepsilon\}=\begin{Bmatrix}\varepsilon^{o}_{x}\\ \gamma^{o}_{x}\\ \mu^{o}_{x}\\ \varepsilon^{o}_{\theta}\\ \gamma^{o}_{\theta}\\ \mu^{o}_{\theta}\\ \kappa_{x}\\ \tau_{x}\\ \kappa_{\theta}\\ \tau_{\theta}\end{Bmatrix}=\begin{Bmatrix}\dfrac{\partial u_x}{\partial x}\\ \dfrac{\partial u_\theta}{\partial x}\\ \dfrac{\partial w}{\partial x}+\beta_x\\ \dfrac{1}{R}\dfrac{\partial u_\theta}{\partial \theta}+\dfrac{w}{R}\\ \dfrac{1}{R}\dfrac{\partial u_x}{\partial \theta}\\ \dfrac{1}{R}\dfrac{\partial w}{\partial \theta}-\dfrac{u_\theta}{R}+\beta_\theta\\ \dfrac{\partial \beta_x}{\partial x}\\ \dfrac{\partial \beta_\theta}{\partial x}+\dfrac{1}{2R}\dfrac{\partial u_\theta}{\partial x}\\ \dfrac{1}{R}\dfrac{\partial \beta_\theta}{\partial \theta}\\ \dfrac{1}{R}\dfrac{\partial \beta_x}{\partial \theta}-\dfrac{1}{2R^2}\dfrac{\partial u_x}{\partial \theta}\end{Bmatrix}_{(10\times 1)} \tag{4.1}$$

where ε^{o}_{i}; γ^{o}_{i}; κ_{i}; τ_{i} and μ^{o}_{i} are, respectively, the normal and in-plane shearing strain, change in the curvature and torsion of the reference surface and the shearing strain components. The constitutive relations for anisotropic laminated cylindrical shells can be written as [35] :

$$\left\{N_{xx},N_{x\theta},Q_{xx},N_{\theta\theta},N_{\theta x},Q_{\theta\theta},M_{xx},M_{x\theta},M_{\theta\theta},M_{\theta x}\right\}^{T}=[P]_{(10\times 10)}\{\varepsilon\} \tag{4.2}$$

Where $\{\varepsilon\}$ and $[P]$ are, respectively, the deformation vector defined by equation (4.1) and the anisotropic matrix of elasticity. P_{ij}'s elements are given in Appendix A-4 (see Reference [35]).

The equations of motion for thin cylindrical shells in terms of axial, tangential and radial displacements (u, v, w) of the mean surface of the shell, rotations of tangents of the reference surface (β_x and β_θ) and in terms of P_{ij}'s elements are given by:

$$
\begin{aligned}
&L_1(U,V,W,\beta_x,\beta_\theta,\overline{P_{ij}})=0.\\
&L_2(U,V,W,\beta_x,\beta_\theta,\overline{P_{ij}})=0.\\
&L_3(U,V,W,\beta_x,\beta_\theta,\overline{P_{ij}})=0.\\
&L_4(U,V,W,\beta_x,\beta_\theta,\overline{P_{ij}})=0.\\
&L_5(U,V,W,\beta_x,\beta_\theta,\overline{P_{ij}})=0.
\end{aligned}
\tag{4.3}
$$

where L_i (i=1,2,...5) are five linear differential operators, the form of which is fully explained in Appendix B-4.

The free vibration of an anisotropic, laminated, composite, circular, cylindrical shell is studied using the hybrid finite element approach, in which a combination of the shear deformation theory of shells and the finite element method is used to derive the displacement functions. The symmetric and anti-symmetric modes in the circumferential direction are coupled with each other due to the presence of in-plane extensional-shear, extensional-bending, bending-twisting, bending-shearing and twisting-stretching coupling in laminated composite shells.

The finite element used is shown in Figure (4.2). It is a cylindrical panel segment defined by nodal lines, *i* and *j*. There are five degrees of freedom at each nodal line, axial,

radial and circumferential displacements (u, v, w) and two rotations (β_x and β_θ). For motion associated with the axial wave number, we may write:

$$\begin{Bmatrix} U(x,\theta) \\ V(x,\theta) \\ W(x,\theta) \\ \beta_x(x,\theta) \\ \beta_\theta(x,\theta) \end{Bmatrix} = \begin{bmatrix} Cos\bar{m}x & 0 & 0 & 0 & 0 \\ 0 & Sin\bar{m}x & 0 & 0 & 0 \\ 0 & 0 & Sin\bar{m}x & 0 & 0 \\ 0 & 0 & 0 & Cos\bar{m}x & 0 \\ 0 & 0 & 0 & 0 & Sin\bar{m}x \end{bmatrix} \begin{Bmatrix} u_n(\theta) \\ v_n(\theta) \\ w_n(\theta) \\ \beta_{x_n}(\theta) \\ \beta_{\theta_n}(\theta) \end{Bmatrix} = [T_1] \begin{Bmatrix} A_n e^{\eta\theta} \\ B_n e^{\eta\theta} \\ C_n e^{\eta\theta} \\ D_n e^{\eta\theta} \\ E_n e^{\eta\theta} \end{Bmatrix} \tag{4.4}$$

where:

$$\bar{m} = \frac{m\pi}{L}$$

These definitions yield more precise results than those of displacement functions defined in polynomial forms. Substituting definitions (4.4) into equations of motion (4.3) and obtaining the non-trivial solution, the determinant of their coefficients must vanish, leading to a tenth order characteristic equation in terms of η *[35]*.

$$f_{10}\eta^{10} + f_8\eta^8 + f_6\eta^6 + f_4\eta^4 + f_2\eta^2 + f_0 = 0. \tag{4.5}$$

where f_i *(i =0 to 10)* are the coefficients of the determinant of five simultaneous algebraic equations in A, B, C, D and E. Each root, η_i, yields a solution to equation (4.3), the complete solution being obtained by the sum of all ten and involving the constants A_i, B_i, C_i, D_i and E_i (i=1,2,...,10).

As A_i, B_i, C_i, D_i and E_i are not independent, we can write:

$$A_i = \alpha_i C_i,\ B_i = \beta_i C_i,\ D_i = \gamma_i C_i \text{ and } E_i = \delta_i C_i. \tag{4.6}$$

The displacements $U(x,\theta)$, $V(x,\theta)$ and $W(x,\theta)$ as well as $\beta_x(x,\theta)$ and $\beta_\theta(x,\theta)$ can then be expressed in conjunction with the ten C_i constants only, which can be determined using ten boundary conditions.

$$\begin{Bmatrix} U(x,\theta) \\ V(x,\theta) \\ W(x,\theta) \\ \beta_x(x,\theta) \\ \beta_\theta(x,\theta) \end{Bmatrix} = \left[T_1\right]_{(5\times5)} \left[R\right]_{(5\times10)} \left\{C\right\}_{(10\times1)} \tag{4.7}$$

where $[R]$ is a (5×10) matrix given in Appendix B-4, and $\{C\}$ is a vector of constants which are linear combinations of the C_i by using equation (4.6). The modal displacement vector is now expressed as follows:

$$\left\{\delta_i\right\} = \left\{u_i\ \ v_i\ \ w_i\ \ \alpha_i\ \ \beta_i\right\}^T \tag{4.8}$$

Each element has two nodal lines and ten degrees of freedom and Θ has a definite value (Θ=0. at the i's nodal line) and ($\Theta=\theta$ at the j 's nodal line), so the element displacements at the boundaries can be given by the following relation:

$$\begin{Bmatrix}\delta_i\\ \delta_i\end{Bmatrix}=\left\{U_i\ V_i\ W_i\ \beta_{x_i}\ \beta_{\theta_i}\ U_j\ V_j\ W_j\ \beta_{x_j}\ \beta_{\theta_j}\right\}^T=[A]_{(10\times10)}\ \{C\}_{(10\times1)} \tag{4.9}$$

where the *[A]* matrix elements are obtained from those of *[R]* matrix and given in Appendix B-4. Substituting this definition into equation (4.7), we get:

$$\begin{Bmatrix}U(x,\theta)\\ V(x,\theta)\\ W(x,\theta)\\ \beta_x(x,\theta)\\ \beta_\theta(x,\theta)\end{Bmatrix}=[T_1][R][A]^{-1}\begin{Bmatrix}\delta_i\\ \delta_j\end{Bmatrix}=[N]\begin{Bmatrix}\delta_i\\ \delta_j\end{Bmatrix} \tag{4.10}$$

These equations determine the displacement functions.

4.3.2 Determination of Mass and Stiffness Matrices for Empty Finite Elements

The strain vector $\{\varepsilon\}$ can now be expressed in terms of δ_i and δ_j using equations (4.1) and (4.10).

$$\{\varepsilon\}=\begin{bmatrix}[T_1] & 0\\ 0 & [T_1]\end{bmatrix}[QQ]\,[A]^{-1}\begin{Bmatrix}\delta_i\\ \delta_j\end{Bmatrix}=[B]\begin{Bmatrix}\delta_i\\ \delta_j\end{Bmatrix} \tag{4.11}$$

where [QQ] is a (10×10) matrix given in Appendix B-4. The corresponding stress-strain relationships can be written as:

$$\{\sigma\} = [P][B]\begin{Bmatrix}\delta_i \\ \delta_j\end{Bmatrix} \tag{4.12}$$

The P_{ij}'s elements describe the shell anisotropy which depends on the mechanical properties of the material of the structure. Some coupling, such as in-plane extensional-shear, extensional-bending and bending-twisting, can be present in anisotropic laminated composite shells due to the asymmetry of the scheme lamination or fiber orientation. Some of the P_{ij}'s elements can, therefore, be null or not-null. The mass and stiffness matrices for one finite element can be expressed as:

$$\begin{aligned}[m] &= \rho_s t \int_0^L \int_0^\theta [N]^T [N] dA \\ [k] &= \int_0^L \int_0^\theta [B]^T [P][B] dA\end{aligned} \tag{4.13}$$

where $dA = Rdx\, d\theta$ and ρ_s is the density of the shell, $[P]$ the elasticity matrix and the matrices $[N]$ and $[B]$ are defined in equation (4.10,4.11), respectively. Substituting them into (4.13) and integrating them analytically with respect to x and θ, we obtain the matrices $[m_s]$ and $[k_s]$. The global matrices $[M_s]$ and $[K_s]$ can be obtained, by superimposing respectively the mass and stiffness matrices of each individual finite element and applying the boundary conditions. Neither intermediate steps nor the final results are given here due to the

complexity of the work involved. The interested reader is referred to reference [35] for more detail.

4.4 Dynamic Fluid-Structure Interaction Behaviour

4.4.1 Assumptions

It is assumed that the shell is subjected only to potential flow, inducing inertial, Coriolis and centrifugal forces which contribute to the structural vibration. These forces are coupled with the elastic deformation of the shell. The mathematical model developed here is based on the following hypotheses:

i) the fluid flow is potential;

ii) the fluid is incompressible which moves irrotationally as a consequence of the shell's vibration;

iii) the fluid is inviscid so there is no shear and the fluid pressure on the wall is purely normal to the surface;

iv) the deformations are small, allowing the use of linear theory;

v) the fluid mean velocity distribution is assumed to be constant across a shell section.

4.4.2 Equations of Motion

In general, the free vibration of a fluid-filled shell involves hydrodynamic and sloshing effects. The hydrodynamic phenomena are the natural vibrations dominated by the shell vibration, while the sloshing phenomena are the natural vibrations dominated by the fluid surface motion. The last effect is not considered in this paper. The physical equations of motion of each structural and fluid component together provide a set of equations for the dynamic equations of motion for fluid-structure interaction.

The motion equation of a shell interacting with a fluid can be represented as:

$$\left(\left[M_s\right]-\left[M_f\right]\right)\left\{\ddot{\delta}\right\}-\left[C_f\right]\left\{\dot{\delta}\right\}+\left(\left[K_s\right]-\left[K_f\right]\right)\left\{\delta\right\}=\left\{F\right\} \tag{4.14}$$

where subscripts '*s*' and '*f*' refer to the shell in *vacuo* and fluid filled, respectively. $[M_s]$ and $[K_s]$ are, respectively, the mass and stiffness matrices of the shell in *vacuo*. They have been developed in [35].

The $[M_f]$, $[C_f]$ and $[K_f]$ represent the inertial, Coriolis and centrifugal forces of the fluid flow, $\{\delta\}$ is the displacement vector and $\{F\}$ represents the external forces. After applying the boundary conditions, these matrices are reduced to square matrices of order $5(N+1)-J$, where N and J are, respectively, the number of elements and the restrictions

imposed.

4.4.3 Determination of the Mass, Stiffness and Damping Matrices of the Moving Fluid

The velocity function, ψ, for ideal, frictionless flow in the linear form must satisfy the following equation:

$$\left\{\frac{1}{C_f^2}\left[\frac{\partial^2()}{\partial t^2}+2U_x\frac{\partial^2()}{\partial x\partial t}+U_x^2\frac{\partial^2()}{\partial x^2}\right]-\nabla^2\right\}\varphi=0. \tag{4.15}$$

where C_f is the speed of sound in the fluid, t, the time variable and ∇^2 is the Laplace operator in cylindrical coordinates. For the steady-state case and with the assumptions of section *3.1*, an incompressible non-viscous fluid, equation (4.15) becomes Laplace's equation which is expressed in the cylindrical coordinate system by:

$$\frac{\partial^2\varphi}{\partial r^2}+\frac{1}{r}\frac{\partial\varphi}{\partial r}+\frac{1}{r^2}\frac{\partial^2\varphi}{\partial\theta^2}+\frac{\partial^2\varphi}{\partial x^2}=0. \tag{4.16}$$

where "φ" is the potential function. The components of the flow velocity are given by:

$$V_x = U_x + \frac{\partial \varphi}{\partial x}\,;\; V_\theta = \frac{1}{R}\frac{\partial \varphi}{\partial \theta}\,;\; V_r = \frac{\partial \varphi}{\partial r} \tag{4.17}$$

where U_x is the velocity of the fluid through the shell section V_x, V_θ and V_r are respectively, the axial, tangential and radial components of the fluid velocity. Using Bernoulli's equation for steady flow:

$$\left(\frac{\partial \varphi}{\partial t} + \frac{V^2}{2} + \frac{P}{\rho_f} \right) \Big|_{r=\zeta} = 0. \tag{4.18}$$

Substituting for V^2, the dynamic pressure "P" can be found as:

$$P_i = -\rho_{fi} \left(\frac{\partial \varphi_i}{\partial t} + U_{xi}\frac{\partial \varphi_i}{\partial x} + \frac{U_{xi}^{\,2}}{2} + \frac{1}{2}\left[\left(\frac{\partial \varphi_i}{\partial x}\right)^2 + \frac{1}{r^2}\left(\frac{\partial \varphi_i}{\partial \theta}\right)^2 + \left(\frac{\partial \varphi_i}{\partial r}\right)^2 \right] \right)_{r=R_i=R-t/2} \tag{4.19}$$

$$P_e = -\rho_{fe} \left(\frac{\partial \varphi_e}{\partial t} + U_{xe}\frac{\partial \varphi_e}{\partial x} + \frac{U_{xe}^{\,2}}{2} + \frac{1}{2}\left[\left(\frac{\partial \varphi_e}{\partial x}\right)^2 + \frac{1}{r^2}\left(\frac{\partial \varphi_e}{\partial \theta}\right)^2 + \left(\frac{\partial \varphi_e}{\partial r}\right)^2 \right] \right)_{r=R_e=R+t/2} \tag{4.20}$$

in which the subscript 'i' and 'e' represent '*internal*' or '*external*' locations of the structure. A full definition of the flow requires that a condition be applied to the shell-fluid interface. The impermeability condition of the shell surface requires that the radial velocity

of the fluid, on the shell surface, should match the instantaneous rate of change of the shell displacement in the radial direction. This condition implies a permanent contact between the shell surface and the peripheral fluid layer which should be:

$$V_r|_{r=R} = \frac{\partial \varphi}{\partial r}|_{r=R} = \left(\frac{\partial W}{\partial t} + U_x \frac{\partial W}{\partial x} \right)_{r=R} \tag{4.21}$$

The differential equation can be solved using the separation of variables method. The radial displacement, from shell theory, is defined as:

$$W(x,\theta,t) = \sum_{j=1}^{10} C_j \exp[\eta_j \theta + i\omega t] \sin \frac{m\pi}{L} x \tag{4.22}$$

where η_j is the jth root of the characteristic equation and ω is the natural angular frequency. The velocity potential is assumed to be:

$$\varphi(x,\theta,r,t) = \sum_{j=1}^{10} R_j(r)\, S_j(x,\theta,t) \tag{4.23}$$

The function $S_j(x,\theta, t)$ can be explicitly determined after applying the impermeability condition (21) and using the radial displacement relation given by equation (4.22). Substituting the explicit term of $S_j(x,\theta,t)$ into equation (4.23), we obtain:

$$\varphi(x,\theta,r,t)=\sum_{j=1}^{10}\frac{R_j(r)}{R'_j(R)}[\dot{W}_j+U_x W'_j] \tag{4.24}$$

where $(\,)'$, $(\,)'$ and $(\,)^{\cdot}$ represent $\partial(\,)/\partial r$, $\partial(\,)/\partial x$ and $\partial(\,)/\partial t$, respectively. Introducing this explicit term (4.24) and equation (4.22) into equation (4.15), we obtain Bessel's homogeneous differential equation.

$$r^2\frac{d^2R_j(r)}{dr^2}+r\frac{dR_j(r)}{dr}+R_j(r)[i^2m_k^2r^2-(i\eta_j)^2]=0. \tag{4.25}$$

where " i " is the complex number, $i^2=-1$, and η_j is the complex solution of the characteristic equation of the empty shell and m_k is defined as below:

$$m_k^2=(\frac{m\pi}{L})^2-\frac{1}{C_f^2}(\omega-iU_x\frac{m\pi}{L})^2 \tag{4.26}$$

where m, L, ω and U_x are the axial mode number, the length of shell, the natural angular frequency and the flow velocity, respectively. For shells in a liquid medium, $i^2m_k^2$ is usually negative, and the general solution of equation (4.26) is given by:

$$R_j(r)=AJ_{i\eta_j}(im_kr)+BY_{i\eta_j}(im_kr) \tag{4.27}$$

where $J_i\eta_j$ and $Y_i\eta_j$ are Bessel functions of the first and second kind, respectively. For a shell filled with a liquid (internal flow), the constant "B" has to be set equal to zero since the $Y_i\eta_j$ is singular at $r=0$. For a shell submerged in a liquid (external flow), the constant "A" is equal to zero. We have to take the complete solution when the shell is simultaneously subjected to internal and external flow.

An expression for dynamic pressure as a function of the displacement W_j and the function $R_j(r)$, taking into account only the linear terms, is obtained by substituting equation (4.24) into equations (4.19, 4.20):

$$P_u = -\rho_{fu}\sum_{j=1}^{10}\frac{R_j(r)}{R'_j(R)}\left[\ddot{W}_j + 2U_{xu}\dot{W}'_j + U_x^2 W''_j\right] \tag{4.28}$$

where "u" represents "internal" or "external" fluid. By definition, the first order derivation of the Bessel function of the first kind is defined as:

$$R'_j(r) = A\left[\frac{i\eta_j}{r}J_i\eta_j(im_k r) - im_k J_i\eta_{j+1}(im_k r)\right] \tag{4.29}$$

With the same definition for the Bessel function of the second kind, and substituting into the dynamic pressure equation (4.28), we obtain the pressure equation on the structure wall as follows:

$$P_u = -\rho_u \sum_{j=1}^{10} Z_j^s(im_k R_u)\left[\ddot{W}_j + 2U_{xu}\dot{W}_j + U^2_{xu} W''_j\right] \tag{4.30}$$

where "s" refers to the first ("J") or second ("Y") kind of Bessel function for the internal or external flow, respectively, and Z_j is defined as below:

$$Z_{ij}(im_k R_i) = \frac{R_i}{i\eta_j - im_k R_i \dfrac{J_i\eta_{j+1}(im_k R_i)}{J_i\eta_j(im_k R_i)}} \qquad R_i = R - t/2 \tag{4.31}$$

and

$$Z_{ej}(im_k R_e) = \frac{R_e}{i\eta_j - im_k R_e \dfrac{J_i\eta_{j+1}(im_k R_e)}{J_i\eta_j(im_k R_e)}} \qquad R_e = R + t/2 \tag{4.32}$$

where η_j (j=1,...,10) are the roots of the characteristic equation of the empty shell, $J_i\eta_j$ and $Y_i\eta_j$ are respectively the Bessel functions of the first and second kind of order $i\eta_j$, m_k is defined by equation (4.26) and R is the mean radius of the shell.

When we substitute the nodal interpolation functions of the empty shell (10), which can be used for the fluid column, into the dynamic pressure expression in (30) and carry out

the necessary matrix operations by our chosen method, the mass, damping and stiffness matrices for the fluid are obtained by integrating the following integral with respect to x and θ:

$$\int_A [N]^T \{P_u\} dA \tag{4.33}$$

Finally, the inertial, Coriolis and centrifugal forces due to a flowing fluid, neglecting the viscous term, can be written as :

$$\begin{aligned} [m_f] &= [A_f^{-1}]^T [S_f] [A_f^{-1}] \\ [c_f] &= [A_f^{-1}]^T [D_f] [A_f^{-1}] \\ [k_f] &= [A_f^{-1}]^T [G_f] [A_f^{-1}] \end{aligned} \tag{4.34}$$

The matrix $[A]$ is defined by equation (4.9) and the elements of $[S_f]$ and $[G_f]$ matrices are given by:

$$\begin{aligned} S_f(i,j) &= -\frac{RL}{2} J_{ij}(\rho_{fi} Z_{ij} - \rho_{fe} Z_{ej}) \\ D_f(i,j) &= \frac{m^2 \pi^2 R}{2L} J_{ij}(\rho_{fi} U_{xe} Z_{ij} - \rho_{fe} U_{xe} Z_{ej}) \\ G_f(i,j) &= \frac{m^2 \pi^2 R}{2L} J_{ij}(\rho_{fi} U^2_{xe} Z_{ij} - \rho_{fe} U^2_{xe} Z_{ej}) \end{aligned} \tag{4.35}$$

Where $i,j = 1,...,10$, ρ_f is the density of the fluid and subscripts "*i*" and "*e*" mean, respectively, internal and external flow. U_x is the velocity of the fluid, Z_{ij} is given in equations (4.31) and (4.32), and J_{ij} is defined by the following equations:

$$J_{ij} = \frac{1}{(\eta_i + \eta_j)}[e^{(\eta_i+\eta_j)\theta} - 1] \qquad if \quad \eta_i + \eta_j \neq 0.$$
$$J_{ij} = \theta \qquad if \quad \eta_i + \eta_j = 0. \tag{4.36}$$

where η is the root of the characteristic equation of an empty shell and θ is the angle of each element.

4.5 Analysis of Free Vibrations

The global matrices *[M]* and *[K]* of each structure and fluid column are obtained by superimposing the mass and stiffness matrices for each individual element. After applying the boundary conditions, these matrices are reduced to square matrices of order $NDF*(N+1)-J$ where *NDF*, *N* and *J* are, respectively, the number of degrees of freedom at each nodal line, nodal lines and restriction imposed.

Finally, the equations of motion of a shell interacting with a fluid are:

$$\left([M_s]-[M_f]\right)\{\ddot{\delta}\} - [C_f]\{\dot{\delta}\} + \left([K_s]-[K_f]\right)\{\delta\} = \{F\} \tag{4.37}$$

Where $[M_s]$ and $[K_s]$ are, respectively, the global mass and stiffness matrices for the empty shell, $[M_f]$ and $[K_f]$ are the global mass and stiffness matrices for the fluid and $[C_f]$ is the Coriolis force of the fluid. Equation (4.37) is thus solved to obtain $5*(N+1)-J$ eigenvalues and eigenvectors. The matrices $[K_f]$ and $[C_f]$ are not involved in computations in the non-flowing fluid (U_{xf}=0.0) case.

4.6 Numerical Results and Discussion

Some calculations are made in this section in applying the proposed method for the case of laminated anisotropic and isotropic open and closed cylindrical shells, partially or completely filled with or subjected to a flowing fluid. The parametric values such as R/t, L/R, fluid depth ratio, as well as the circumferential and axial wave number, for all examples, are provided with the figures.

It should be noted that the results referred to [Ref.23 Selmane& Lakis], except Figure (4.20), have been obtained by the present authors (Toorani & Lakis) and are based on Sanders' theory. All numerical results presented for anisotropic laminated (symmetric and anti-symmetric cross-ply and anti-symmetric angle-ply lay-outs) materials for both open and closed cylindrical shells are carried out for the following material properties:

E_1=212 Gpa $\qquad$ $G_{13}=G_{23}=0.5\ G_{12}$

E_2=12.72 Gpa $\qquad$ v=1/3

G_{12}=7.42 Gpa

The two first examples (Figure 4.3 and 4.4) are carried out for a simply-supported, isotropic, thin, circular, cylindrical shell completely filled with liquid (internal). The frequency parameter (Ω) is shown in figures (4.3 and 4.4) for different values of *R/t* and *L/R* and is compared with results provided by Lakis and Sinno [Ref.20].

The effect of the axial mode (***m***) on the non-dimensional natural frequencies of a fluid-filled cylindrical shell for different values of *L/R* and two fixed values of *R/t* is shown in figures (4.5 and 4.6). The difference between the results obtained by the two theories increases as the axial mode (***m***) is increased and the radius-to-thickness ratio is decreased for a fixed value of *L/R*.

The radius-to-thickness and the length-to-radius ratio effects are studied by means of the next example (Figure 4.7) for two different values of circumferential wave number. Comparison of results of the present theory with those of Sanders' theory [Ref.23] show that the shear deformation effect is significant and increases as the length-to-radius ratio decreased for all ratios of *R/t*.

Figure (4.8) is drawn for an isotropic shell showing different longitudinal vibration modes (***m***) as a function of the circumferential wave number (**n**). As can be seen, the influence of transverse shear deformation on the natural frequencies is more pronounced with increasing (**m**). A similar study is carried out (Figure 4.9) for a symmetric cross-ply

laminated cylindrical shell having four laminae (0°/90°/90°/0°).

The variation of the non-dimensional frequency parameter (Ω) as a function of the length-to-radius ratio L/R of isotropic and laminated anisotropic shells (having symmetric /0°/90°/90°/0° lay-outs) are drawn in Figures (4.10 and 4.11) for different values of L/t and longitudinal wave number (**m**). For low ratio of L/R and high numbers of (**m**), there are always relatively large differences between the non-dimensional frequencies obtained from two different theories (present theory and Sanders' theory [23]).This difference diminished as L/R increases.

The next example (Figures 4.12) has been made for anti-symmetric cross-ply, laminated, closed, cylindrical shells in order to study the fluid depth effect on the frequency parameter (Ω) as a variation of the circumferential wave number (**n**). The difference between the present theory and Sanders' shell theory [23] is more pronounced in the case of anisotropic material, as expected, due to the shear deformation effect.

The fluid depth effect is studied for open cylindrical shells through Figures (4.13 and 4.14). The first is carried out for an anisotropic (anti-symmetric angle-ply) open cylindrical shell having its straight edges free, and the curved edges free and simply-supported. The effect of fluid height on the natural frequency variation is studied as a variation of the length-to-radius ratio and the axial mode number.

Figure (4.14) shows results obtained for an open cylindrical shell having its straight

edges clamped and the curved edges freely simply-supported. As an illustration, it is shown here that the lowest natural frequency of bending vibration of fluid-filled shells is highly dependent on the fluid level especially for a low ratio of *L/R*.

It can be observed, from these figures (4.13 and 4.14), that the general shapes of the natural frequency curves of the partially fluid-filled shells are similar to those of the corresponding empty shells. The natural frequencies of the partially fluid-filled shells are lower than those of the corresponding empty shells. This is due to the fact that the fluid increases the total mass of the shell.

Numerical results are presented for partially fluid-filled, anisotropic laminated (Figure 4.15) and isotropic (Figure 4.16) closed, circular cylindrical shells. The fluid contained in the shells is taken as water. The effect of transverse shear deformation on the natural frequencies has been studied by comparing the results obtained from the present theory with those of Sanders' theory(Ref.[23] Selmane&Lakis). In this study, the focus is on the effect of fluid height on the natural frequencies of cylindrical shells.

The liquid depth, ***b***, was varied such that the fractional filling , ***b/d***, took the values ***b/d*** (=0, 0.25, 0.5, 0.75 and 1). For each ***b/d***, the natural frequencies were measured for a number of values of axial and circumferential wave number (**m, n**). As can be seen, the natural frequencies decrease considerably with increasing **b/d** in the range 0 < **b/d** <0.25 (for **m**=1, **n**=2) and 0 < **b/d** <0.5 (for **m**=1, **n**=1) approximately, the decrease being only slight for higher fractional filling. We concluded that the frequency parameter (Ω) depends both

on physical (**m, n**) and on geometrical (*L/R, R/t, b/d*) parameters as a result of the lateral pressure exerted by the liquid on the structure.

The next example (Figure 4.17) shows the frequency variation as a function of the circumferential wave number (**n**) for three different cases, shell in air, fluid-filled shell and shell immersed in fluid. The results obtained are compared with those of Gonçalves and Batista [Ref.6]. The two theories give nearly identical results for the fluid-filled shell and the shell immersed in liquid.

The influence of the flow velocity U_{xi} (for internal flow) on the frequency parameter of isotropic and anisotropic closed cylindrical shells is studied through Figures (4.18-4.21) for different values of *R/t, L/R* as well as axial and circumferential wave number (**m,n**). The results obtained have been compared with those from work based on two other theories [Ref.23 Sanders' theory] and [Ref.38 Galerkin method].

The non-dimensional parameters of velocity and frequency used in this section are $U=u/u_o$ and $\Omega=\omega/\omega_o$, where:

$$u_o = \frac{\pi^2}{L^2}\left(\frac{K}{\rho_s t}\right)^{\frac{1}{2}} \qquad K = \frac{Et^3}{12(1-\nu^2)} \qquad \textit{Isotropic}$$

$$\omega_o = \frac{u_o}{L} \qquad K = \frac{E_1 t^3}{12(1-\nu_{12}^2)} \qquad \textit{Anisotropic}$$

The u and ω are respectively the velocity of the flowing fluid and the natural frequency. It is observed that the frequencies associated with all modes decrease as the fluid velocity increases from zero. The frequency parameters remain real (the system being

conservative) until they vanish at high velocities, indicating the existence of a buckling-type instability. In this case, the frequencies become purely imaginary.

Figure (4.18) shows the results obtained for a cross-ply laminated shell along with those from Sanders' theory, for different values of axial mode number. In the next example (Figure 4.19), the results obtained from the present theory have been compared with those from two other theories, a hybrid finite element method based on Sanders' theory [23] and the two-term Galerkin method [38]. As the flow velocity increases, the above two methods generate significantly different results from those of the present refined hybrid finite element approach. This might be attributed to:

i) not considering the influence of transverse shear deformation and initial curvature in their modeling, and

ii) limitations associated with the use of too few terms in the application of Galerkin's method.

The first mode frequency becomes negative imaginary at U=2.96, indicating static divergence instability in the first axial mode (**m**=1), and reappears and coalesces at U=3.36 with that of the second axial mode (**m**=2), to produce coupled mode flutter. Figures (4.20 and 4.21) show divergence instability phenomena for an isotropic simply-supported closed cylindrical shell along with results obtained from [Ref.23].

The non-dimensional frequency parameter $\Omega=\rho_s\omega_o R(Q_{33}-Q_{13}^2/Q_{11})^{-1/2}$ is plotted (Figure

4.22) vs. the thickness-to-radius ratio (t/R), for various values of ($\eta=mR/L$) and is compared with results provided by Jain [Ref.7]. The transversely isotropic material (zinc) with the following elastic constants is considered in this example:

$$Q_{11}=Q_{22}=1.5825\times10^{12} \qquad Q_{33}=0.6160\times10^{12}$$

$$Q_{12}=.3151\times10^{12} \qquad Q_{13}=Q_{23}=0.4744\times10^{12} \qquad (\text{dyne/cm}^2)$$

$$Q_{44}=Q_{66}=0.4\times10^{12} \qquad Q_{55}=0.6337\times10^{12}$$

In Figure (4.23), the frequency parameter ratio is sketched as a function of the fluid depth ratio **b/d**. In this example, Ω_f and Ω_v are the natural frequency parameters corresponding to a fluid-fluid and empty shell, respectively. The curves are drawn for two mode number pairs (**m**=1, **n**=2 and **m**=2, **n**=3) and two different length-to-radius ratios L/R. It is observed that the decrease in the frequency parameter ratio is rapid in the range $0.0\leq$ **b/d** ≤ 0.5 and, thereafter, it slows down for higher fraction filling. This means that the frequency parameter of a fluid-filled shell (Ω_f) decreases rapidly in this range.

In the last example (table 4.1), the natural frequencies of an isotropic cylindrical shell simply-supported at both ends, for both empty and fluid-filled cases, are calculated for the first four axial modes and the first circumferential wave number (**n**=1). The shell had the following properties:

$$R/t=60\,,\ L/R=24.98,\ R=35.43''\,,\ \nu=0.3,\ E=29.5\times10^6\ \text{lb/in}^2$$

$$\rho_s=0.734\times10^{-3}\ \text{lb-sec}^2/\text{in}^4, \quad \rho_f=0.935\times10^{-4}\ \text{lb-sec}^2/\text{in}^4$$

The results are listed in Table (4.1) along with those of Lakis & Sinno [Ref.20] and Niordson [Ref.37].

4.7 Conclusion

An analytical procedure has been presented for the dynamic analysis of anisotropic and isotropic circular cylindrical shells, both open and closed. This method is used to predict the effects of inertia, Coriolis and centrifugal forces on the vibration characteristics of shells which are partially or completely filled with, submerged in, and subjected simultaneously to, an internal and external incompressible, inviscid fluid.

The method is a combination of hybrid finite element analysis and refined shear deformation theory of shells. The displacement functions are derived from an exact solution of refined shell equations based on the orthogonal curvilinear coordinates and Green's exact relations of strain displacements.

The mass and stiffness matrices of each structural element are derived by exact analytical integration. The velocity potential, Bernoulli's equation, the linear impermeability and dynamic conditions applied to the shell-fluid interface have been used to obtain an explicit expression for fluid pressure.

The fluid pressure has been analytically integrated over the liquid element to obtain

the mass, stiffness and damping matrices due to the fluid effect. Numerical examples are given for the free vibration of laminated composite, symmetric and anti-symmetric cross-ply and anti-symmetric angle-ply, and isotropic materials for both open and closed circular cylindrical shells.

Parametric studies such as radius-to-thickness ratio (R/t), length-to-radius ratio (L/R), length-to-thickness ratio (L/t), axial and circumferential mode number (**m,n**) and fluid depth ratio are carried out through several numerical examples, to demonstrate the accuracy and range of applicability of the present theory, and results obtained have been compared with those of others.

Some calculations have been carried out to study the convergence of solutions. For fluid-filled shells (no-flow condition U_x =0.), the natural frequencies could be obtained with 10 to 15 elements with very good accuracy over the range of parametric values shown in all examples. As U_x increased to reach a critical velocity, 20 to 25 elements are necessary to have acceptable convergence.

The following conclusions may be drawn from the numerical results presented in this paper:

i) The natural frequencies of fluid-filled shells are lower than the corresponding values of empty shells due to increased kinetic energy of the system without a corresponding increase in the strain energy.

ii) Frequency reduction is shown to increase with liquid depth and is dependent on the material and geometrical parameters of shell and fluid.

iii) Frequency reduction of fluid-filled shells becomes more significant as the radius-to-thickness ratio is increased, because the relative increase in kinetic energy due to fluid as compared to that of the shell itself is greater for thinner shells than for thicker shells.

iv) Shear deformation effect is more pronounced for anisotropic materials and thicker shells.

This theory is capable of solving the equations of motion of fluid-filled shells for any boundary condition (e.g. free, clamped and simply-supported) without the necessity for changing the displacement functions. This method may be also used in the free vibration analysis of circumferentially non-uniform open and closed cylindrical shells subjected to a flowing fluid.

The geometrical non-linearity effect, large displacements and rotations, on the natural frequencies of open cylindrical shells, fluid-filled with, or subjected to, a flowing fluid, will be the subject of a later work based on the present theory.

4.8 Appendix A-4

These appendices contain the equations of motion of cylindrical shells and other equations which are referred to in the various sections of this work.

A-Constitutive Relations of Anisotropic Circular Cylindrical shells-The stress-strain relationships for any ply, in the lamina reference axes (1, 2, 3) are given by:

$$\begin{Bmatrix} \sigma_1 \\ \sigma_2 \\ \sigma_3 \\ \tau_{23} \\ \tau_{13} \\ \tau_{12} \end{Bmatrix} = \begin{bmatrix} Q_{11} & Q_{12} & Q_{13} & 0 & 0 & 0 \\ Q_{21} & Q_{22} & Q_{23} & 0 & 0 & 0 \\ Q_{31} & Q_{32} & Q_{33} & 0 & 0 & 0 \\ 0 & 0 & 0 & Q_{44} & 0 & 0 \\ 0 & 0 & 0 & 0 & Q_{55} & 0 \\ 0 & 0 & 0 & 0 & 0 & Q_{66} \end{bmatrix} \begin{Bmatrix} \varepsilon_1 \\ \varepsilon_2 \\ \varepsilon_3 \\ \varepsilon_{23} \\ \varepsilon_{13} \\ \varepsilon_{12} \end{Bmatrix} \tag{A-4.1}$$

where Q_{ij}'s elements are related to material properties of a lamina as:

$$\begin{aligned} Q_{11} &= E_{11}(1-\nu_{23}\nu_{32})/\Delta \quad ; \quad Q_{44} = G_{23} \\ Q_{22} &= E_{22}(1-\nu_{31}\nu_{13})/\Delta \quad ; \quad Q_{55} = G_{13} \\ Q_{33} &= E_{11}(1-\nu_{12}\nu_{21})/\Delta \quad ; \quad Q_{66} = G_{12} \\ Q_{12} &= (\nu_{21}+\nu_{31}\nu_{23})E_{11}/\Delta = (\nu_{12}+\nu_{32}\nu_{13})E_{22}/\Delta \\ Q_{13} &= (\nu_{31}+\nu_{21}\nu_{32})E_{11}/\Delta = (\nu_{13}+\nu_{12}\nu_{23})E_{33}/\Delta \\ Q_{23} &= (\nu_{32}+\nu_{12}\nu_{31})E_{22}/\Delta = (\nu_{23}+\nu_{21}\nu_{13})E_{33}/\Delta \\ \Delta &= 1-\nu_{12}\nu_{21}-\nu_{23}\nu_{32}-\nu_{31}\nu_{13}-2\nu_{21}\nu_{32}\nu_{13} \end{aligned} \tag{A-4.2}$$

and E_{11}, E_{22} and E_{33} are, respectively, Young's moduli in the *1*, *2* and *3* directions. The G_{12}, G_{23} and G_{13} are, respectively, shear moduli in the *1-2*, *2-3* and *1-3* planes and ν_{ij} are

Poisson's ratios. The stress-strain relations in terms of global coordinates *(x,θ, z)* are obtained using transformation manipulations and given as:

$$\{\bar{\sigma}\} = \begin{Bmatrix} \sigma_x \\ \sigma_\theta \\ \sigma_n \\ \tau_{\theta n} \\ \tau_{xn} \\ \tau_{x\theta} \end{Bmatrix} = \begin{vmatrix} \overline{Q_{11}} & \overline{Q_{12}} & \overline{Q_{13}} & 0 & 0 & \overline{Q_{16}} \\ \overline{Q_{21}} & \overline{Q_{22}} & \overline{Q_{26}} & 0 & 0 & \overline{Q_{26}} \\ \overline{Q_{31}} & \overline{Q_{32}} & \overline{Q_{33}} & 0 & 0 & \overline{Q_{36}} \\ 0 & 0 & 0 & \overline{Q_{44}} & \overline{Q_{45}} & 0 \\ 0 & 0 & 0 & \overline{Q_{54}} & \overline{Q_{55}} & 0 \\ \overline{Q_{16}} & \overline{Q_{26}} & \overline{Q_{36}} & 0 & 0 & \overline{Q_{66}} \end{vmatrix} \begin{Bmatrix} \varepsilon_x \\ \varepsilon_\theta \\ \varepsilon_n \\ \gamma_{\theta n} \\ \gamma_{xn} \\ \gamma_{x\theta} \end{Bmatrix} \tag{A-4.3}$$

where $\overline{Q}_{ij}$'s elements are the transformed stiffness of any lamina and defined as :

$$\overline{Q'_{ij}}\ s\ \ elements:$$

$$\overline{Q_{11}} = Q_{11}m^4 + 2(Q_{12}+2Q_{66})m^2n^2 + Q_{22}n^4 \quad ; \quad \overline{Q_{22}} = Q_{11}n^4 + 2(Q_{12}+2Q_{66})m^2n^2 + Q_{22}m^4$$

$$\overline{Q_{12}} = (Q_{11}+Q_{22}-4Q_{66})m^2n^2 + Q_{12}(m^4+n^4) \quad ; \quad \overline{Q_{23}} = Q_{13}n^2 + Q_{23}m^2$$

$$\overline{Q_{13}} = Q_{13}m^2 + Q_{23}n^2 \quad ; \quad \overline{Q_{26}} = -m^3nQ_{22} + mn^3Q_{11} + mn(m^2-n^2)(Q_{12}+2Q_{66})$$

$$\overline{Q_{16}} = -mn^3Q_{22} + m^3nQ_{11} - mn(m^2-n^2)(Q_{12}+2Q_{66}) \quad , \quad \overline{Q_{66}} = (Q_{11}+Q_{22}-2Q_{12})m^2n^2 + Q_{66}(m^2-n^2)^2 \tag{A-4.4}$$

$$\overline{Q_{33}} = Q_{33}$$

$$\overline{Q_{36}} = (Q_{13}-Q_{23})mn \quad ; \quad \overline{Q_{45}} = (Q_{55}-Q_{44})mn$$

$$\overline{Q_{44}} = Q_{44}m^2 + Q_{55}n^2 \quad ; \quad \overline{Q_{55}} = Q_{55}m^2 + Q_{44}n^2$$

$$m = \cos\alpha \ ; \ n = \sin\alpha$$

Finally, the constitutive relations for the anisotropic laminated cylindrical shell are

obtained by integrating the stress resultants and stress couples through the thickness of the shell and given by the following equation [see reference 35];

$$
\begin{Bmatrix} N_{xx} \\ N_{x\theta} \\ Q_{xz} \\ N_{\theta\theta} \\ N_{\theta x} \\ Q_{\theta z} \\ M_{xx} \\ M_{x\theta} \\ M_{\theta\theta} \\ M_{\theta x} \end{Bmatrix}
=
\begin{bmatrix}
A_{11}+\frac{B_{11}}{R} & (A_{16}+\frac{B_{16}}{R}) & 0 & A_{12}+\frac{B_{12}}{R} & (A_{16}+\frac{B_{16}}{R}) & 0 & B_{11}+\frac{D_{11}}{R} & (B_{16}+\frac{D_{16}}{R}) & B_{12}+\frac{D_{12}}{R} & (B_{16}+\frac{D_{16}}{R}) \\
A_{61}+\frac{B_{61}}{R} & (A_{66}+\frac{B_{66}}{R}) & 0 & A_{62}+\frac{B_{62}}{R} & (A_{66}+\frac{B_{66}}{R}) & 0 & B_{61}+\frac{D_{61}}{R} & (B_{66}+\frac{D_{66}}{R}) & B_{62}+\frac{D_{62}}{R} & (B_{66}+\frac{D_{66}}{R}) \\
0 & 0 & (A_{55}+\frac{B_{55}}{R}) & 0 & 0 & (A_{45}+\frac{B_{45}}{R}) & 0 & 0 & 0 & 0 \\
A_{21} & A_{26} & 0 & A_{22} & A_{26} & 0 & B_{21} & B_{26} & B_{22} & B_{26} \\
A_{61} & A_{66} & 0 & A_{62} & A_{66} & 0 & B_{61} & B_{66} & B_{62} & B_{66} \\
0 & 0 & A_{45} & 0 & 0 & A_{44} & 0 & 0 & 0 & 0 \\
B_{11}+\frac{D_{11}}{R} & (B_{16}+\frac{D_{16}}{R}) & 0 & B_{12}+\frac{D_{12}}{R} & (B_{16}+\frac{D_{16}}{R}) & 0 & D_{11}+\frac{E_{11}}{R} & (D_{16}+\frac{E_{16}}{R}) & D_{12}+\frac{E_{12}}{R} & (D_{16}+\frac{E_{16}}{R}) \\
B_{61}+\frac{D_{61}}{R} & (B_{66}+\frac{D_{66}}{R}) & 0 & B_{62}+\frac{D_{62}}{R} & (B_{66}+\frac{D_{66}}{R}) & 0 & D_{61}+\frac{E_{61}}{R} & (D_{66}+\frac{E_{66}}{R}) & D_{62}+\frac{E_{62}}{R} & (D_{66}+\frac{E_{66}}{R}) \\
B_{21} & B_{26} & 0 & B_{22} & B_{26} & 0 & D_{21} & D_{26} & D_{22} & D_{26} \\
B_{61} & B_{66} & 0 & B_{62} & B_{66} & 0 & D_{61} & D_{66} & D_{62} & D_{66}
\end{bmatrix}_{(10\times 10)}
\begin{Bmatrix} \varepsilon^{o}_{x} \\ \gamma^{o}_{x} \\ \mu^{o}_{x} \\ \varepsilon^{o}_{\theta} \\ \gamma^{o}_{\theta} \\ \mu^{o}_{\theta} \\ \kappa_{x} \\ \tau_{x} \\ \kappa_{\theta} \\ \tau_{\theta} \end{Bmatrix}_{(10\times 1)}
$$

(A-4.5)

where A_{ij}, B_{ij}, D_{ij} , E_{ij}. $A_{\alpha\beta}$ and $B_{\alpha\beta}$ are defined by;

$$
\begin{aligned}
A_{ij} &= \sum_{k=1}^{N} (\overline{Q_{ij}})_k (h_k - h_{k-1}) \\
B_{ij} &= \frac{1}{2}\sum_{k=1}^{N} (\overline{Q_{ij}})_k (h^2{}_k - h^2{}_{k-1}) \qquad i,j=1,6,2,6 \\
D_{ij} &= \frac{1}{3}\sum_{k=1}^{N} (\overline{Q_{ij}})_k (h^3{}_k - h^3{}_{k-1}) \\
E_{ij} &= \frac{1}{4}\sum_{k=1}^{N} (\overline{Q_{ij}})_k (h_k^4 - h^4{}_{k-1})
\end{aligned}
\qquad \text{(A-4.6)}
$$

$$A_{\alpha\beta}=\sum_{k=1}^{N}(\overline{Q_{\alpha\beta}})_k(h_k-h_{k-1})$$
$$B_{\alpha\beta}=\frac{1}{2}\sum_{k=1}^{N}(\overline{Q_{\alpha\beta}})_k(h^2{}_k-h^2{}_{k-1}) \qquad \alpha,\beta=4,5 \qquad \text{(A-4.7)}$$

N: *Number of layers*

4.9 Appendix B-4

B-The Equations of Motion of a Cylindrical Shell (Equation 4.3):

$$\begin{aligned}
&L_1(U,V,W,\beta_x,\beta_\theta,\overline{P_{ij}})= \\
&P_{11}\frac{\partial^2 U_x}{\partial x^2}+(\frac{1}{R}(P_{15}+P_{51})-\frac{1}{2R^2}(p_{1,10}+p_{10,1}))\frac{\partial^2 U_x}{\partial x\partial\theta}+ \\
&+(\frac{P_{55}}{R^2}-\frac{(P_{10,5}+P_{5,10})}{2R^3}+\frac{P_{10,10}}{4R^4})\frac{\partial^2 U_x}{\partial\theta^2}-I_1\frac{\partial^2 U_x}{\partial t^2}+ \\
&+(P_{12}+\frac{P_{18}}{2R})\frac{\partial^2 U_\theta}{\partial x^2}+(\frac{P_{58}}{2R^2}+\frac{1}{R}(P_{14}+P_{52})-\frac{P_{10,2}}{2R^2}-\frac{P_{10,8}}{4R^3})\frac{\partial^2 U_\theta}{\partial x\partial\theta}+ \\
&+(\frac{P_{54}}{R^2}-\frac{P_{10,4}}{2R^3})\frac{\partial^2 U_\theta}{\partial\theta^2}+\frac{P_{14}}{R}\frac{\partial W}{\partial x}+(\frac{P_{54}}{R^2}-\frac{P_{10,4}}{2R^3})\frac{\partial W}{\partial\theta}+ \\
&P_{17}\frac{\partial^2\beta_x}{\partial x^2}+(\frac{1}{R}(P_{1,10}+P_{57})-\frac{P_{10,7}}{2R^2})\frac{\partial^2\beta_x}{\partial x\partial\theta}+(\frac{P_{5,10}}{R^2}-\frac{P_{10,10}}{2R^3})\frac{\partial^2\beta_x}{\partial\theta^2}-I_2\frac{\partial^2\beta_x}{\partial t^2}+ \\
&P_{18}\frac{\partial^2\beta_\theta}{\partial x^2}+(\frac{1}{R}(P_{19}+P_{58})-\frac{P_{10,8}}{2R^2})\frac{\partial^2\beta_\theta}{\partial x\partial\theta}+(\frac{P_{5,9}}{R^2}-\frac{P_{10,9}}{2R^3})\frac{\partial^2\beta_\theta}{\partial\theta^2}
\end{aligned} \qquad \text{(B-4.1)}$$

$$
\begin{gathered}
L_2(U,V,W,\beta_x,\beta_\theta,\overline{P}_\eta)= \\
(\frac{P_{81}}{2R}+P_{21})\frac{\partial^2 U_x}{\partial x^2}+(\frac{1}{R}(P_{25}+P_{41})+\frac{P_{85}}{2R^2}-\frac{P_{8,10}}{4R^3}-\frac{P_{2,10}}{2R^2})\frac{\partial^2 U_x}{\partial x\partial\theta}+ \\
+(\frac{P_{45}}{R^2}-\frac{P_{4,10}}{2R^3})\frac{\partial^2 U_x}{\partial\theta^2}+ \\
(\frac{P_{82}}{2R}+\frac{P_{88}}{4R^2}+P_{22}+\frac{P_{28}}{R})\frac{\partial^2 U_\theta}{\partial x^2}+(\frac{1}{R}(P_{24}+P_{42})+\frac{1}{2R^2}(P_{48}+P_{84}))\frac{\partial^2 U_\theta}{\partial x\partial\theta}+ \\
+\frac{P_{44}}{R^2}\frac{\partial^2 U_\theta}{\partial\theta^2}-\frac{P_{66}}{R^2}U_\theta-I_1\frac{\partial^2 U_\theta}{\partial t^2}+ \\
+(\frac{1}{R}(P_{24}+P_{63})+\frac{P_{84}}{2R^2})\frac{\partial W}{\partial x}+\frac{1}{R^2}(P_{44}+P_{66})\frac{\partial W}{\partial\theta}+ \\
+(\frac{P_{87}}{2R}+P_{27})\frac{\partial^2\beta_x}{\partial x^2}+(\frac{1}{R}(P_{2,10}+P_{47})+\frac{P_{8,10}}{2R^2})\frac{\partial^2\beta_x}{\partial x\partial\theta}+ \\
+\frac{P_{4,10}}{R^2}\frac{\partial^2\beta_x}{\partial\theta^2}+\frac{P_{63}}{R}\beta_x+ \\
+(\frac{P_{88}}{2R}+P_{28})\frac{\partial^2\beta_\theta}{\partial x^2}+(\frac{1}{R}(P_{29}+P_{48})+\frac{P_{89}}{2R^2})\frac{\partial^2\beta_\theta}{\partial x\partial\theta}+ \\
+\frac{P_{49}}{R^2}\frac{\partial^2\beta_\theta}{\partial\theta^2}+\frac{P_{66}}{R}\beta_\theta-I_2\frac{\partial^2\beta_\theta}{\partial t^2}
\end{gathered}
\tag{B-4.2}
$$

$$
\begin{gathered}
L_3(U,V,W,\beta_x,\beta_\theta,\overline{P}_\eta)= \\
-\frac{P_{41}}{R}\frac{\partial U_x}{\partial x}+(\frac{P_{4,10}}{2R^3}-\frac{P_{45}}{R^2})\frac{\partial U_x}{\partial\theta}- \\
-\frac{1}{R}(P_{36}+P_{42}+\frac{P_{48}}{2R})\frac{\partial U_\theta}{\partial x}-\frac{1}{R^2}(P_{44}+P_{66})\frac{\partial U_\theta}{\partial\theta}\bullet \\
+P_{33}\frac{\partial^2 W}{\partial x^2}+\frac{1}{R}(P_{63}+P_{36})\frac{\partial^2 W}{\partial x\partial\theta}+\frac{P_{66}}{R^2}\frac{\partial^2 W}{\partial\theta^2}-\frac{P_{44}}{R^2}W-I_1\frac{\partial^2 W}{\partial t^2}+ \\
+(P_{33}-\frac{P_{47}}{R})\frac{\partial\beta_x}{\partial x}+\frac{1}{R}(P_{63}-\frac{P_{4,10}}{R})\frac{\partial\beta_x}{\partial\theta}+ \\
+(P_{36}-\frac{P_{48}}{R})\frac{\partial\beta_\theta}{\partial x}+\frac{1}{R}(P_{66}-\frac{P_{49}}{R})\frac{\partial\beta_\theta}{\partial\theta}
\end{gathered}
\tag{B-4.3}
$$

$$
\begin{aligned}
&L_4(U,V,W,\beta_x,\beta_\theta,\overline{P_{ij}}) = \\
&P_{71}\frac{\partial^2}{\partial x^2} + \left(\frac{1}{R}(P_{75}+P_{10,1}) - \frac{P_{7,10}}{2R^2}\right)\frac{\partial^2}{\partial x \partial \theta} + \left(\frac{P_{10,5}}{R^2} - \frac{P_{10,10}}{2R^3}\right)\frac{\partial^2 U_x}{\partial \theta^2} - I_2\frac{\partial^2 U_x}{\partial t^2} + \\
&+\left(P_{72} + \frac{P_{78}}{2R}\right)\frac{\partial^2 U_\theta}{\partial x^2} + \left(\frac{1}{R}(P_{74}+P_{10,2}) + \frac{P_{10,8}}{2R^2}\right)\frac{\partial^2 U_\theta}{\partial x \partial \theta} + \frac{P_{10,4}}{R^2}\frac{\partial^2 U_\theta}{\partial \theta^2} + \frac{P_{36}}{R}U_\theta + \\
&+\left(\frac{P_{74}}{R} - P_{33}\right)\frac{\partial W}{\partial x} + \frac{1}{R}\left(\frac{P_{10,4}}{R} - P_{36}\right)\frac{\partial W}{\partial \theta} + \\
&+P_{77}\frac{\partial^2 \beta_x}{\partial x^2} + \frac{1}{R}(P_{7,10}+P_{10,7})\frac{\partial^2 \beta_x}{\partial x \partial \theta} + \frac{P_{10,10}}{R^2}\frac{\partial^2 \beta_x}{\partial \theta^2} - P_{33}\beta x - I_3\frac{\partial^2 \beta_x}{\partial t^2} + \\
&P_{78}\frac{\partial^2 \beta_\theta}{\partial x^2} + \frac{1}{R}(P_{79}+P_{10,8})\frac{\partial^2 \beta_\theta}{\partial x \partial \theta} + \frac{P_{10,9}}{R^2}\frac{\partial^2 \beta_\theta}{\partial \theta^2} - P_{36}\beta_\theta
\end{aligned}
\tag{B-4.4}
$$

$$
\begin{aligned}
&L_5(U,V,W,\beta_x,\beta_\theta,\overline{P_{ij}}) = \\
&P_{81}\frac{\partial U_x^2}{\partial x^2} + \left(\frac{1}{R}(P_{85}-P_{91}) - \frac{P_{8,10}}{2R^2}\right)\frac{\partial^2 U_x}{\partial x \partial \theta} + \left(\frac{P_{95}}{R^2} - \frac{P_{9,10}}{2R^3}\right)\frac{\partial^2 U_x}{\partial \theta^2} + \\
&(P_{82} + \frac{P_{88}}{2R})\frac{\partial^2 U_\theta}{\partial x^2} + \left(\frac{1}{R}(P_{84}+P_{92}) + \frac{P_{98}}{2R^2}\right)\frac{\partial^2 U_\theta}{\partial x \partial \theta} + \\
&+\frac{P_{94}}{R^2}\frac{\partial^2 U_\theta}{\partial \theta^2} + \frac{P_{66}}{R}U_\theta - I_2\frac{\partial^2 U_\theta}{\partial t^2} + \\
&+\left(\frac{P_{84}}{R} - P_{63}\right)\frac{\partial W}{\partial x} + \frac{1}{R}\left(\frac{P_{94}}{R} - P_{66}\right)\frac{\partial W}{\partial \theta} + \\
&P_{87}\frac{\partial^2 \beta_x}{\partial x^2} + \frac{1}{R}(P_{97}+P_{8,10})\frac{\partial^2 \beta_x}{\partial x \partial \theta} + \frac{P_{9,10}}{R^2}\frac{\partial^2 \beta_x}{\partial \theta^2} - P_{63}\beta_x + \\
&P_{88}\frac{\partial^2 \beta_\theta}{\partial x^2} + \frac{1}{R}(P_{89}+P_{98})\frac{\partial^2 \beta_\theta}{\partial x \partial \theta} + \frac{P_{99}}{R^2}\frac{\partial^2 \beta_\theta}{\partial \theta^2} - P_{66}\beta_\theta - I_3\frac{\partial^2 \beta_\theta}{\partial t^2}
\end{aligned}
\tag{B-4.5}
$$

Intermediate Matrices;

-The **[R]** $_{(5\times10)}$ matrix (equation 4.7);

$$
\begin{aligned}
R(1,j) &= \alpha_j e^{\eta_j \theta} \\
R(2,j) &= \beta_j e^{\eta_j \theta} \\
R(3,j) &= e^{\eta_j \theta} \qquad j=1,2,..,10 \\
R(4,j) &= \gamma_j e^{\eta_j \theta} \\
R(5,j) &= \delta_j e^{\eta_j \theta}
\end{aligned}
\tag{B-4.6}
$$

- The **[A]** $_{(10\times10)}$ matrix (equation 4.9);

$$
\begin{aligned}
A(1,j)&=\alpha_j \;;\; A(6,j)=A(1,j)\,a_j \\
A(2,j)&=\beta_j \;;\; A(7,j)=A(2,j)\,a_j \\
A(3,j)&=1 \;;\; A(8,j)=a_j \qquad a_j=e^{\eta_j \theta} \quad j=1,2,...,10 \\
A(4,j)&=\gamma_j \;;\; A(9,j)=A(4,j)\,a_j \\
A(5,j)&=\delta_j \;;\; A(10,j)=A(5,j)\,a_j
\end{aligned}
\tag{B-4.7}
$$

-The elements of $[\mathbf{QQ}]_{(10\times10)}$'s matrix (equation 4.11);

$$
\begin{aligned}
&QQ(1,j)=-\alpha_j\overline{m}\,e^{\eta_j\theta} && ; \quad QQ(6,j)=[\frac{1}{R}(\eta_j-\beta_j)+\delta_j]\,e^{\eta_j\theta} \\
&QQ(2,j)=\beta_j\overline{m}\,e^{\eta_j\theta} && ; \quad QQ(7,j)=-\gamma_j\overline{m}\,e^{\eta_j\theta} \\
&QQ(3,j)=(\gamma_j+\overline{m})\,e^{\eta_j\theta} && ; \quad QQ(8,j)=[\delta_j\overline{m}+\frac{\overline{m}}{2R}\beta_j]\,e^{\eta_j\theta} \qquad j=1,\ldots,10 \\
&QQ(4,j)=\frac{1}{R}(1+\eta_j\beta_j)\,e^{\eta_j\theta} && ; \quad QQ(9,j)=\frac{1}{R}\eta_j\delta_j\,e^{\eta_j\theta} \\
&QQ(5,j)=\frac{1}{R}(\eta_j\alpha_j)\,e^{\eta_j\theta} && ; \quad QQ(10,j)=[\frac{1}{R}\eta_j\gamma_j-\frac{1}{2R^2}\eta_j\alpha_j\quad]\,e^{\eta_j\theta}
\end{aligned}
\tag{B-4.8}
$$

where:

$$\overline{m}=\frac{m\pi}{L}$$

4.10 REFERENCES

[1] S.J. Brown 1982 American Society of Mechanical Engineers Journal of Pressure Vessel Technology **104**, 2-19. A Survey of Studies Into the Hydrodynamic Response of Fluid-Coupled Circular Cylinders.

[2] M.P. Païdoussis and G.X. Li 1993 Journal of Fluid and Structures **7**,137-204. Pipes Conveying Fluid: A Model Dynamical Problem.

[3] M.C. Junger 1952 Journal of Applied Mechanics **74**.439-445. Vibrations of Elastic Shells in a Fluid Medium and the Associated Radiation of Sound.

[4] H.H. Bleich and M.L. Baron 1954 Journal of Applied Mechanics **21**, 167-177. Free and Forced Vibrations of an Infinitely Long Cylindrical Shell in an Infinite Acoustic Medium.

[5] J.E. Greenspon 1961 Journal of the Acoustical Society of America **33**, 1321-1328. Vibrations of Thick and Thin Cylindrical Shells Surrounded by Water.

[6] P.B. Gonçalves and R.C. Batista 1987 Journal of Sound and Vibration Journal of Sound and Vibration Frequency Response of Cylindrical Shells Partially Submerged or Filled With Liquid.

[7] R.K. Jain 1974 Journal of Sound and Vibration **37**(3),379-388. Vibration of Fluid-Filled, Orthotropic Cylindrical Shells.

[8] R.P.S. Han and J.D. Liu 1994 Journal of Sound and Vibration **176**(2), 235-253. Free Vibration Analysis of a Fluid-Loaded Variable Thickness Cylindrical Tank.

[9] B. Brenneman and M.K. Au-Yang 1992 Journal of Pressure Vessel Technology **114**, 133-138. Fluid-Structure Dynamics With a Modal Hybrid Method.

[10] W.H. Chu December 1963 Journal of Applied Mechanics 532-536. Breathing Vibrations of a Partially Filled Cylindrical Tank-Linear Theory.

[11] R. Endo and N. Tosaka 1989 JSME International Journal, Series I **32**(2), 217-221. Free Vibration Analysis of Coupled External Fluid-Elastic Cylindrical Shell- Internal Fluid Systems.

[12] J. Ramachandran 1979 Journal of Sound and Vibration **64**(1), 97-106. Non-Linear Vibrations of Cylindrical Shells of Varying Thickness in an Incompressible Fluid.

[13] J. Crouzet-Pascal and H. Garnet June 1972 Journal of applied Mechanics 521-526. Response of Ring-Reinforced Cylindrical Shell, Immersed in a Fluid Medium, to an Axisymmetric Step Pulse.

[14] M.K. Au-Yang July 1986 Journal of Vibration, Acoustic, Stress and Reliability in Design **108**, 339-347. Dynamics of Coupled Fluid-Shells.

[15] A.E. Chebair and A.K. Misra August 1991 Journal of Pressure Vessel and

Technology **113**,409- 417. On the Dynamics and Stability of Cylindrical Shells Conveying Inviscid or Viscous Fluid in Internal or Annular Flow.

[16] R.D. Blevin Van Nostrand Reinhold Company. Formulas for Natural Frequency and Mode Shape.

[17] H.J.P. Morand and R. Ohayon 1992 Masson, Paris. Interactions Fluids-Structures.

[18] A.A. Lakis and M.P. Païdoussis 1971 Journal of Sound and Vibration **19**,1-15. Free Vibration of Cylindrical Shells partially Filled With Liquid.

[19] A.A. Lakis and A. Laveau 1991 International Journal of Solids and Structures **28**,1079-1094. Non-Linear Dynamic Analysis of Anisotropic Cylindrical Shells Containing a Flowing Fluid.

[20] A.A. Lakis and M. Sinno 1992 International Journal for Numerical Methods in Engineering **33**, 235-268. Free Vibration of Axisymmetric and Beam-Like Cylindrical Shells Partially Filled with Liquid.

[21] A.A. Lakis, P. Van Dyke and H. Ouriche 1992 Journal of Fluid and Structures **6**,135-162. Dynamic Analysis of Anisotropic Fluid-Filled Conical Shells.

[22] A. Selmane and A.A. Lakis 1997 Computer &Structures **62**(1),1-12. Dynamic Analysis of Anisotropic Open Cylindrical Shells.

[23] A. Selmane and A.A. Lakis 1997 Journal of Fluid and Structures **11**,111-134.

Vibration Analysis of Anisotropic Open Cylindrical Shells Subjected to a Flowing Fluid.

[24] A. Selmane and A.A. Lakis 1997 International Journal for Numerical Methods in Engineering **40**,1115-1137. Influence of Geometric Non-Linearities on the Free Vibrations of Orthotropic Open Cylindrical Shells.

[25] A. Selmane and A.A. Lakis 1997 Journal of Sound and Vibration **202**(1), 67-93. Non-Linear Dynamic Analysis of Orthoropic Open Cylindrical Shells Subjected to a Flowing Fluid.

[26] A.A. Lakis and M.P. Païdoussis 1972 Journal of Sound and Vibration **25**,1-27. Prediction of the Response of a Cylindrical Shell to Arbitrary or Boundary Layer Random Pressure Field.

[27] A.A. Lakis and M.P. Païdoussis 1973 Atomic Energy of Canada Ltd., AECL Report No. 4362. Shell of Natural Frequencies of the Pickering Steam Generator.

[28] A.A. Lakis 1976 Proceeding of International Conference on Pressure Surges, London, U.K. J1-1,J1-15, Cranfield, UK., BHRA. Effects of fluid Pressures on the Vibration Characteristics of Cylindrical Vessels.

[29] A.A. Lakis, S.M. Sami and J. Rousselet 1978 24th International Instrumentation Symposium, Albuquerque, New Mexico, 267-276, Pittsburg, PA: Instrument Society of America. Turbulent Two Phase Flow Loop Facility for Predicting Wall-Pressure Fluctuations and Shell response.

[30] A.A. Lakis, N.Q. Tuy and A. Selmane 1989 Proceeding of the International Symposium on Structural Analysis and optimization, Paris, France, 80-85, Gournay-sur-Marne, France: Institute for Industrial Technology Transfer. Analysis of Axially Non-Uniform Thin Spherical Shells.

[31] A.A. Lakis 1976 2nd International Symposium of Finite Element in Flow Problems, Santa Marguerite Ligure, Italy. Theoretical Model of cylindrical Structures Containing Turbulent Flowing Fluids.

[32] A.A. Lakis and R. Doré 1978 International Journal of Solids and Structure **14**(6),499-516. General Method for Analyzing Contact Stresses on Cylindrical Vessels.

[33] A.A. Lakis, A. Selmane and A. Toledano 1998 Int. J. Mech. Sci. **40**(1),27-49. Non-linear Free Vibration Analysis of Laminated Orthotropic Cylindrical Shells.

[34] M.H. Toorani and A.A. Lakis 1999 Technical Report **EPM/ RT-99-03**, École Polytechnique de Montréal, Canada. Effects of the Transverse Shear Deformations and Rotatory Inertia on the General Equations of Anisotropic Plates and Shells.

[35] M.H. Toorani and A.A. Lakis 1999 Technical Report **EPM/ RT-99-04**,École Polytechnique de Montréal, Canada. Effects of the Transverse Shear Deformations on the Free Vibration of an Anisotropic Open Circular Cylindrical Shells.

[36] M. Amabili 1996 Journal of Sound and Vibration **191**(5),757-780. Free Vibration of Partially Filled Horizontal cylindrical Shells.

[37] F.I.N. Niordson 1953 Trans. Roy. Ins. Technol. (Stockholm), No. **73**. Vibration of a Cylindrical Tube Containing Flowing Fluid.

[38] D.S. Weaver and T.E. Unny 1973 Journal of Applied Mechanics **40**, 48-52. On the Dynamic Stability of Fluid Conveying Pipes.

4.11 NOMENCLATURE

A, B, C, D, E : defined by Eq.(4.4)

A_{ij} : extensional stiffness Eq.(A-4.6)

B_{ij} : bending-extensional coupling stiffness Eq.(A-4.6)

C_f :speed of sound in the fluid

D_{ij} :bending stiffness Eq.(A-4.6)

f_i (i=1 to 10): coefficients of characteristic equation (4.5)

i : $i^2 = -1$

$J_i\eta_j$ (i $m_k r$) : Bessel function of the first kind and of order $_i\eta_j$

L: length of shell

L_i : motion equations Eq.(4.3)

m : axial mode number

$\overline{m}$: defined by $\dfrac{m\pi}{L}$

M_x, M_θ, $M_{x\theta}$, $M_{\theta x}$: the moment resultants (4.2)

n : circumferential wave number

N_x, N_θ, $N_{x\theta}$, $N_{\theta x}$: the in-plane force resultants (4.2)

P : lateral pressure exerted on the shell

P_i : internal pressure

P_e : external pressure

P_{ij} : terms of elasticity matrix(i=1,... ,10 ; j=1,..., 10) Eq. (A-4.5)

$\overline{Q}_{ij}$: the elastic stiffness in the global coordinates Eq.(A-4.4)

Q_{xx}, $Q_{\theta\theta}$: the transverse force resultants Eq.(4.2)

R : mean radius of the shell

R_j (r) : solution of Bessel equation (4.27)

$S_j(x, \theta, t)$: defined by Eq.(4.23)

t : thickness of the shell

u, v, w : the axial, circumferential and radial displacement respectively

U_m, V_m, W_m, β_{xm}, $\beta_{\theta m}$: amplitudes of u, v, w, β_x, and β_θ associated with m_{th} axial mode number

Ux : velocity of the fluid , *i* internal fluid and *e* external fluid

V_x, V_θ, V_r : axial, tangential and radial fluid velocity (4.17)

x : axial coordinate

$Y_i\eta_j$ (i m_kr) : Bessel function of the second kind and of order $_i\eta_j$

$Z_j(im_k R_k)$: defined by Eq. (4.31,4.32)

α_i, β_i, γ_i and δ_i defined by Eq.(4.6)

β_x and β_θ : the rotations of tangents to the reference surface

η_i : complex roots of the characteristic Eq.(4.5)

ε^0_x and ε^0_θ : normal strains of the reference surface

γ^0_x and γ^0_θ : in-plane shearing strains of the reference surface

κ_x and κ_θ : change in the curvature of the reference surface

τ_x and τ_θ : torsion of the reference surface

$\mu^0{}_x$ and $\mu^0{}_\theta$: the shearing strains

θ : circumferential coordinate

ϕ : velocity potential

ω : natural frequency

ρ_s : density of the shell material

ρ_f: density of fluid, f, for internal fluid and f_e for external fluid

∇^2 : Laplacien operator

Liste of Matrices:

$[A]_{(10\times10)}$: defined by Eq.(4.9)

$[B]_{(10\times10)}$: defined by equation(4.11)

$[C_f]$ damping matrix

$[G_f]$: defined by Eq.(4.34)

$[k_f]$: stiffness matrix for a fluid finite element Eq.(4.34)

$[K_f]$: stiffness matrix for the whole fluid(4.37)

$[k_s]$: stiffness matrix for a shell finite element Eq.(4.13)

$[K_s]$: stiffness matrix for the whole shell (4.37)

$[m_f]$: local mass matrix for a fluid finite element Eq.(4.34)

$[M_f]$: mass matrix for the whole fluid Eq.(4.37)

$[m_s]$: local mass matrix for a shell finite element Eq.(4.13)

$[M_s]$: mass matrix for the whole shell Eq.(4.37)

$[N]$: shape function matrix(4.10)

$[P]$: elasticity matrix Eq.(4.2, A-4.5)

$[QQ]$: defined by Eq.(4.11, B-4.8)

$[R]$: defined by Eq.(4.10, B-4.6)

$[S_f]$: defined by Eq.(4.34)

$[T_1]$: transformation matrix Eq.(4.7)

$\{C\}$: vector for arbitrary constants (4.7)

$\{F\}$: the external forces (4.14)

$\{\delta_i\}$: degrees of freedom at node i

$\{\varepsilon\}$: deformation vector Eq.(4.1)

Table 4.1

Free vibration (Hz) of a cylindrical shell simply supported at both ends

m	Present	Niordson[17]	Bakis[20]
1	9.5688 4.1965	9.956 4.504	9.861 4.549
2	36.189 16.062	37.504 17.257	37.290 17.46
3	75.042 34.225	77.271 36.361	77.900 37.137
4	121.17 55.63	123.693 59.594	128.120 62.115

First line of values corresponds to empty shell; second line corresponds to fluid-filled shell.

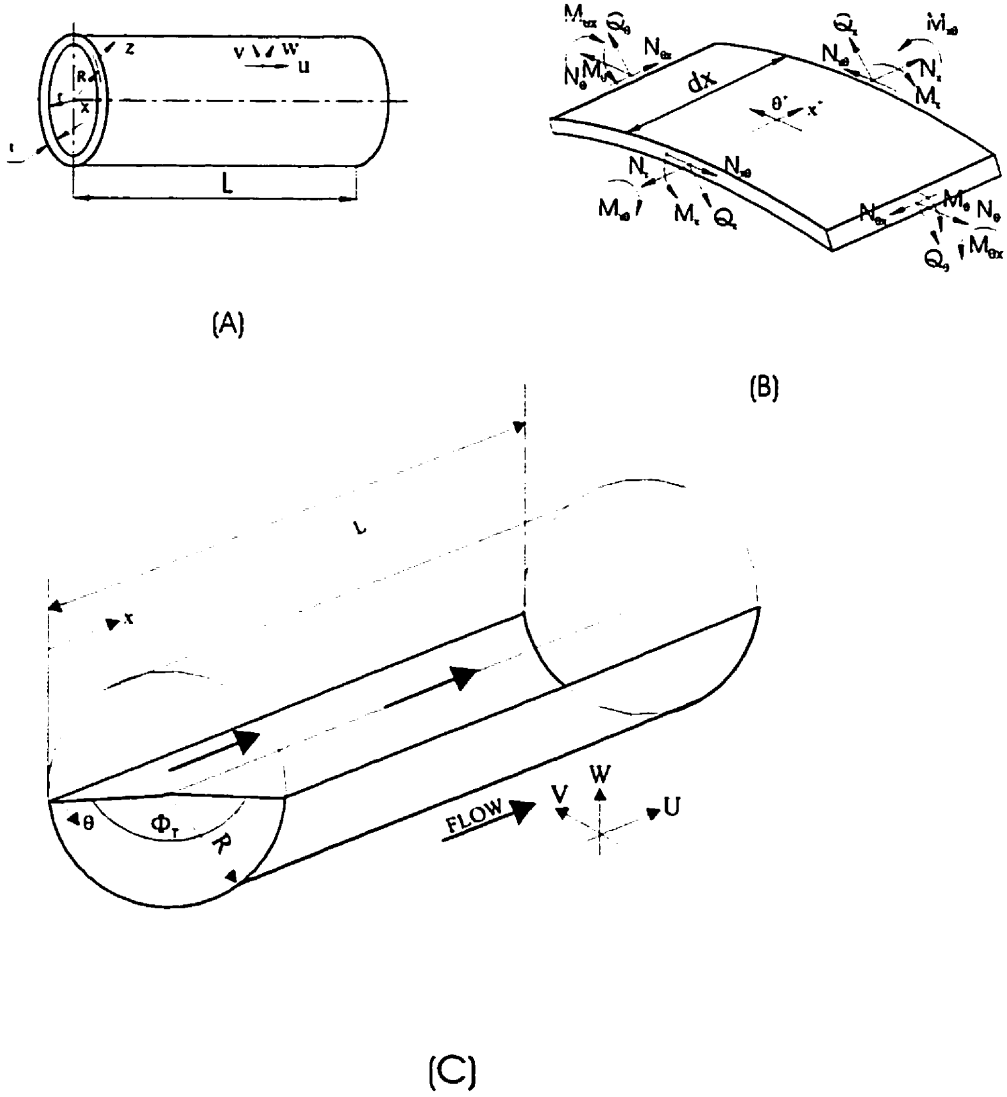

Figure 4.1 A) Circular cylindrical shell geometry
B) Positive directions of integrated stress quantities
C) Flowing fluid open cylindrical shell

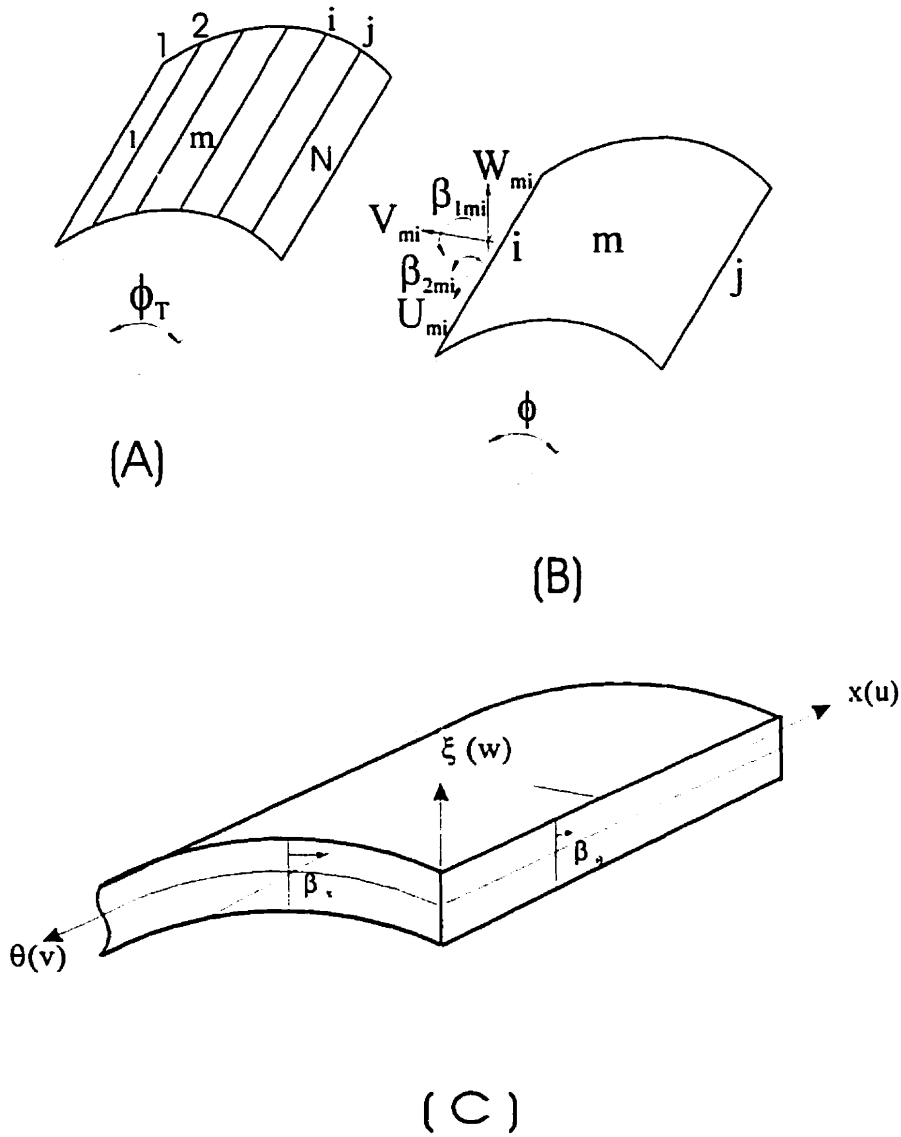

Figure 4.2 A) Finite element discretization
B) Nodal displacement at node *i* for the *m*'th element.
C) Definition of variables

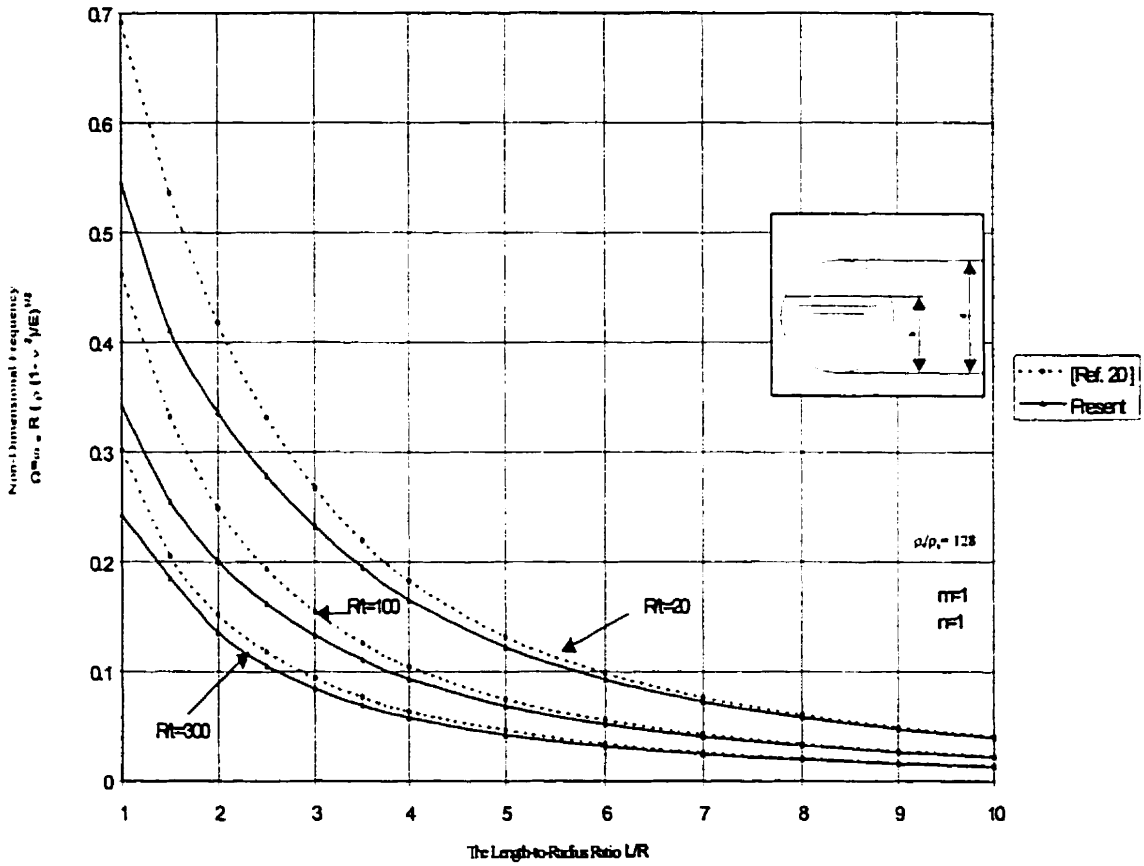

Figure 4.3 Frequency distributions (Ω) of a fluid-filled closed cylindrical shell as a function of ***R/t*** and ***L/R*** (Isotropic Materials).

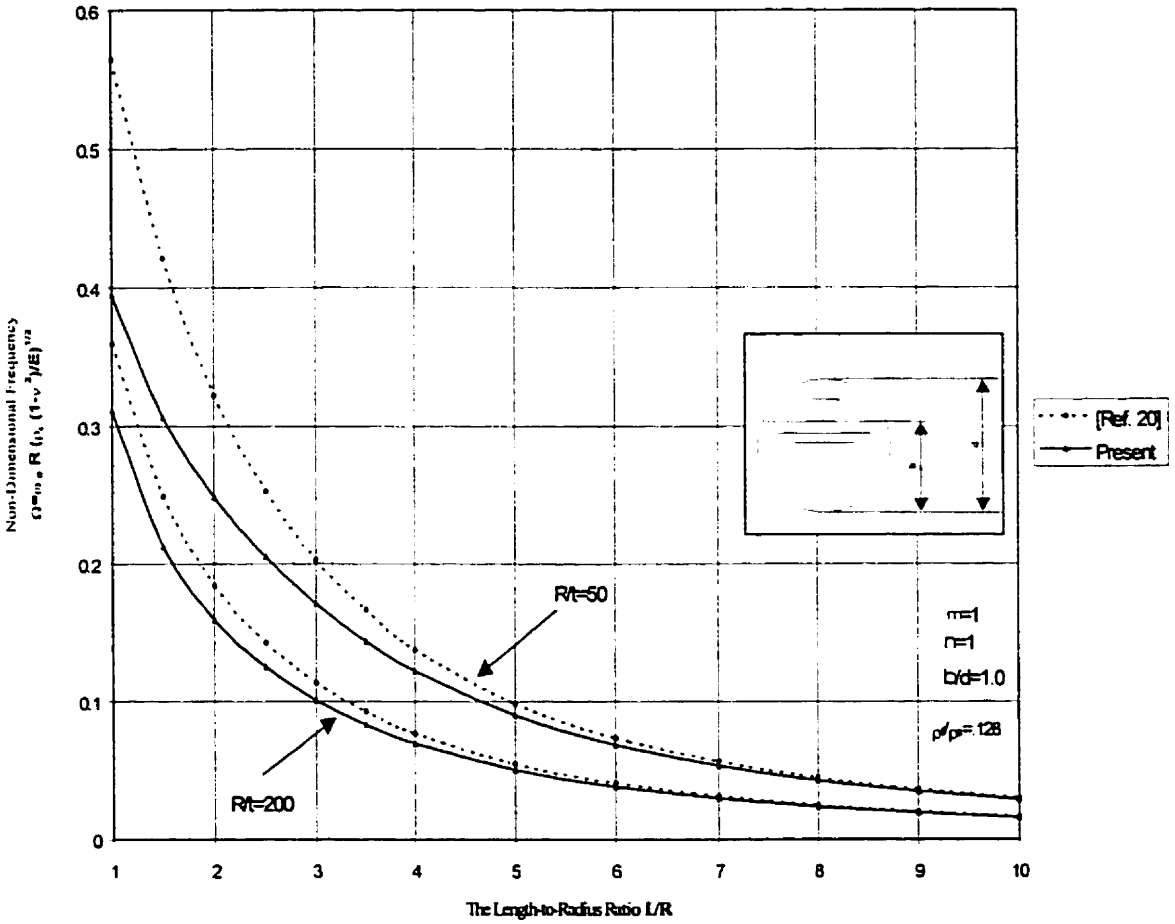

Figure 4.4 Variation of non-dimensional natural frequencies (Ω) in conjunction with variation of ***R/t*** and ***L/R*** (Isotropic Materials).

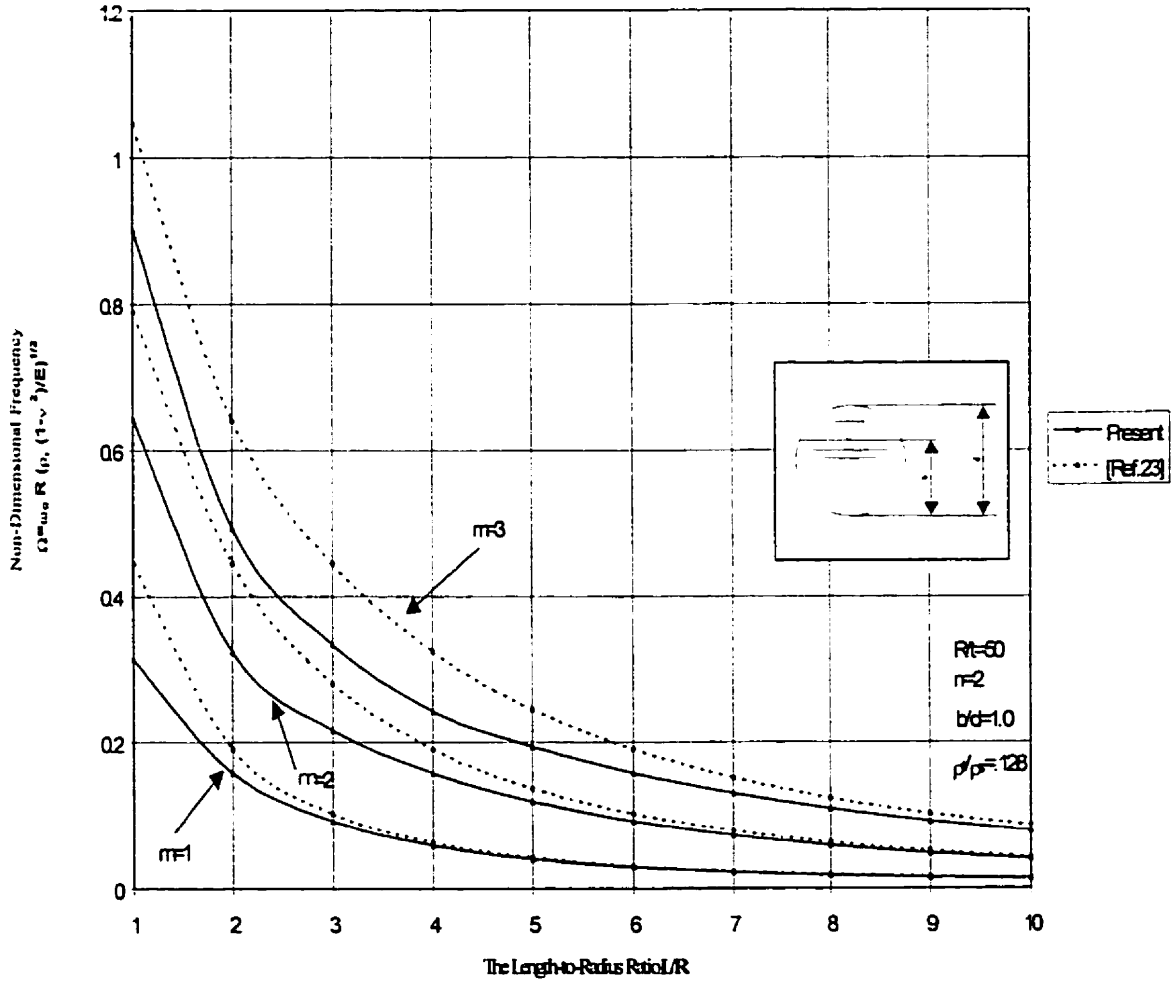

Figure 4.5 Natural frequencies (Ω) of a fluid-filled cylindrical shell in terms of the ***m*** and ***L/R*** variations (Isotropic Materials).

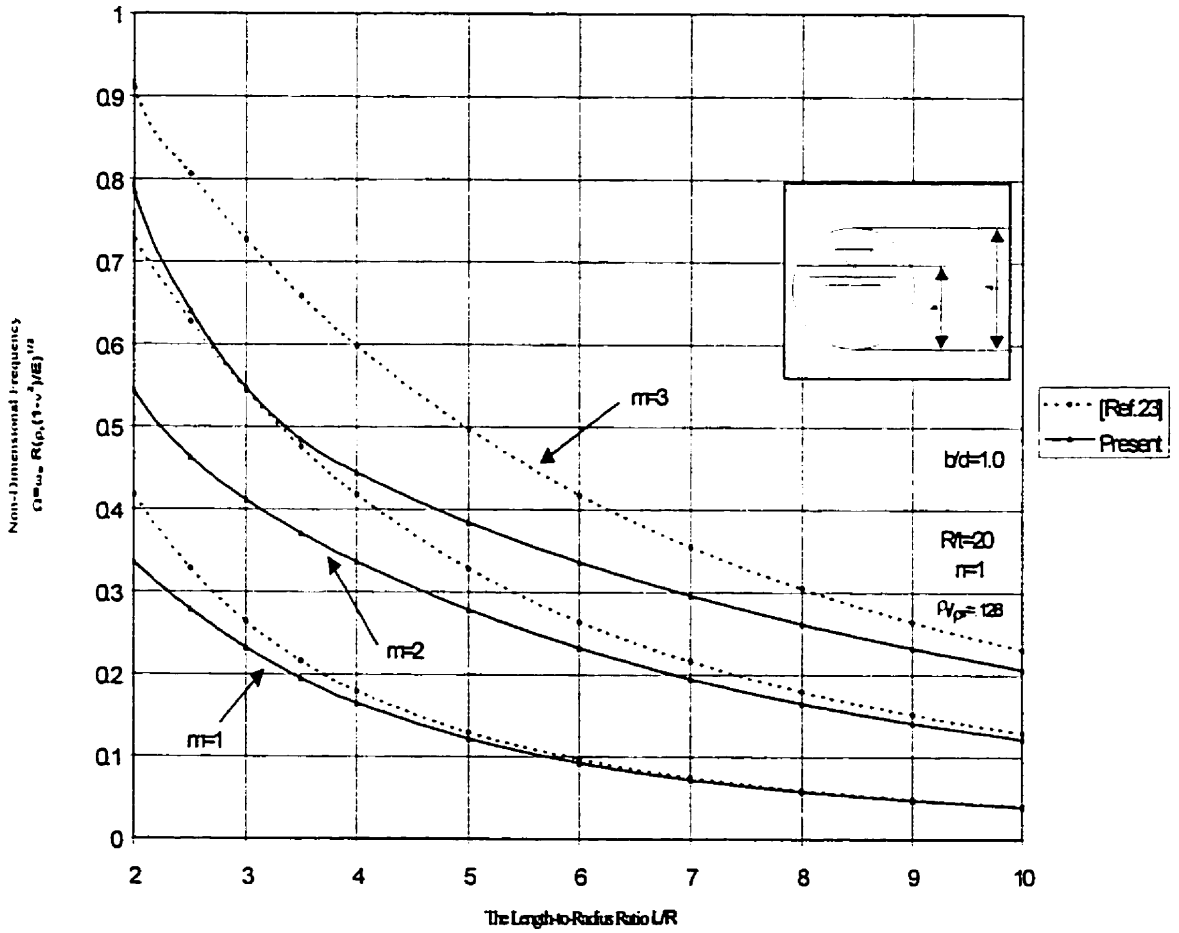

Figure 4.6 The effect of axial mode number (*m*) on the frequency parameter (Ω) of a fluid-filled shell (Isotropic Materials).

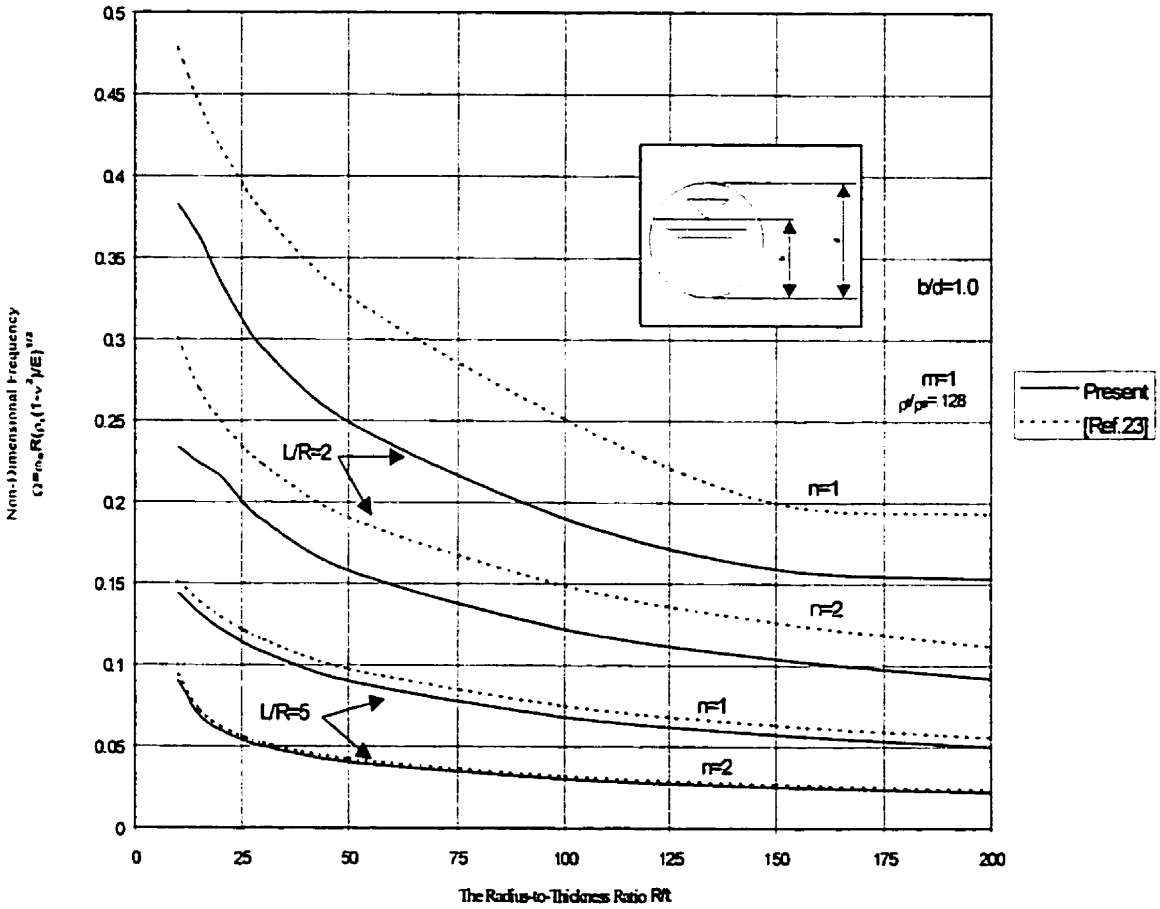

Figure 4.7 Variation of non-dimensional natural frequencies (Ω) as a function of ***R/t***, ***L/R*** and (***n***) variations (Isotropic Materials).

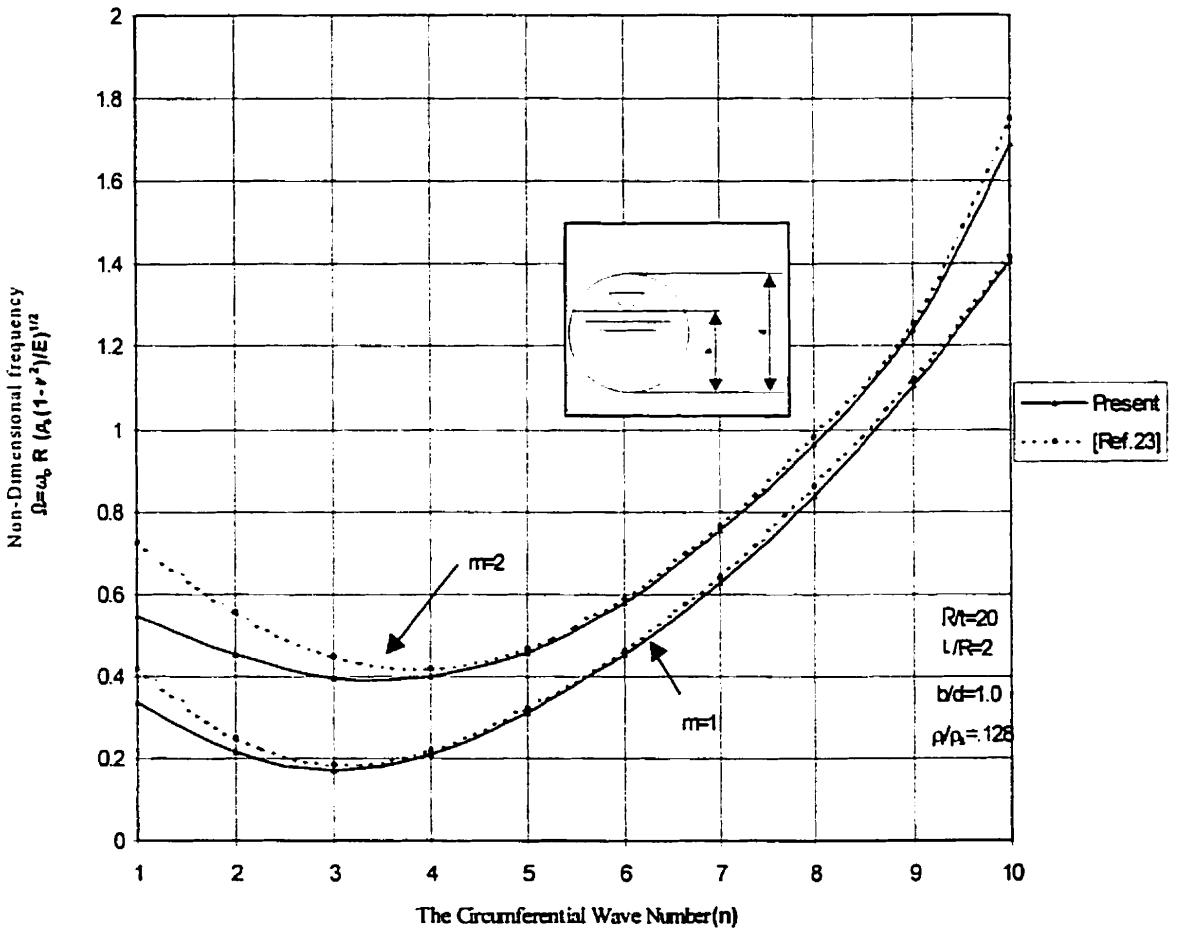

Figure 4.8 Natural frequency parameter (Ω) of a fluid-filled shell as variation of circumferential mode number (n) (Isotropic Materials).

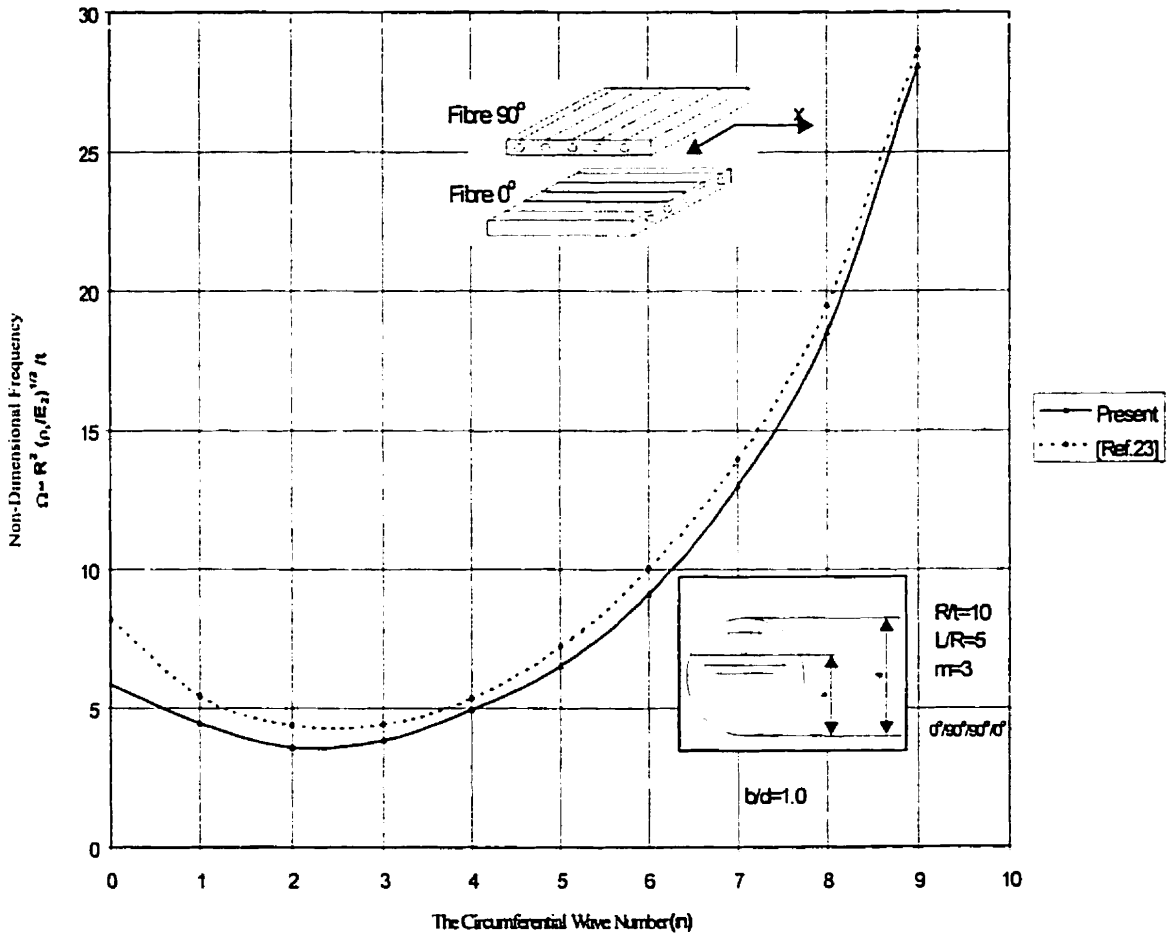

Figure 4.9 Natural frequency parameter (Ω) of a cross-ply fluid-filled shell in terms of circumferential wave number (n) variations (Anisotropic Materials).

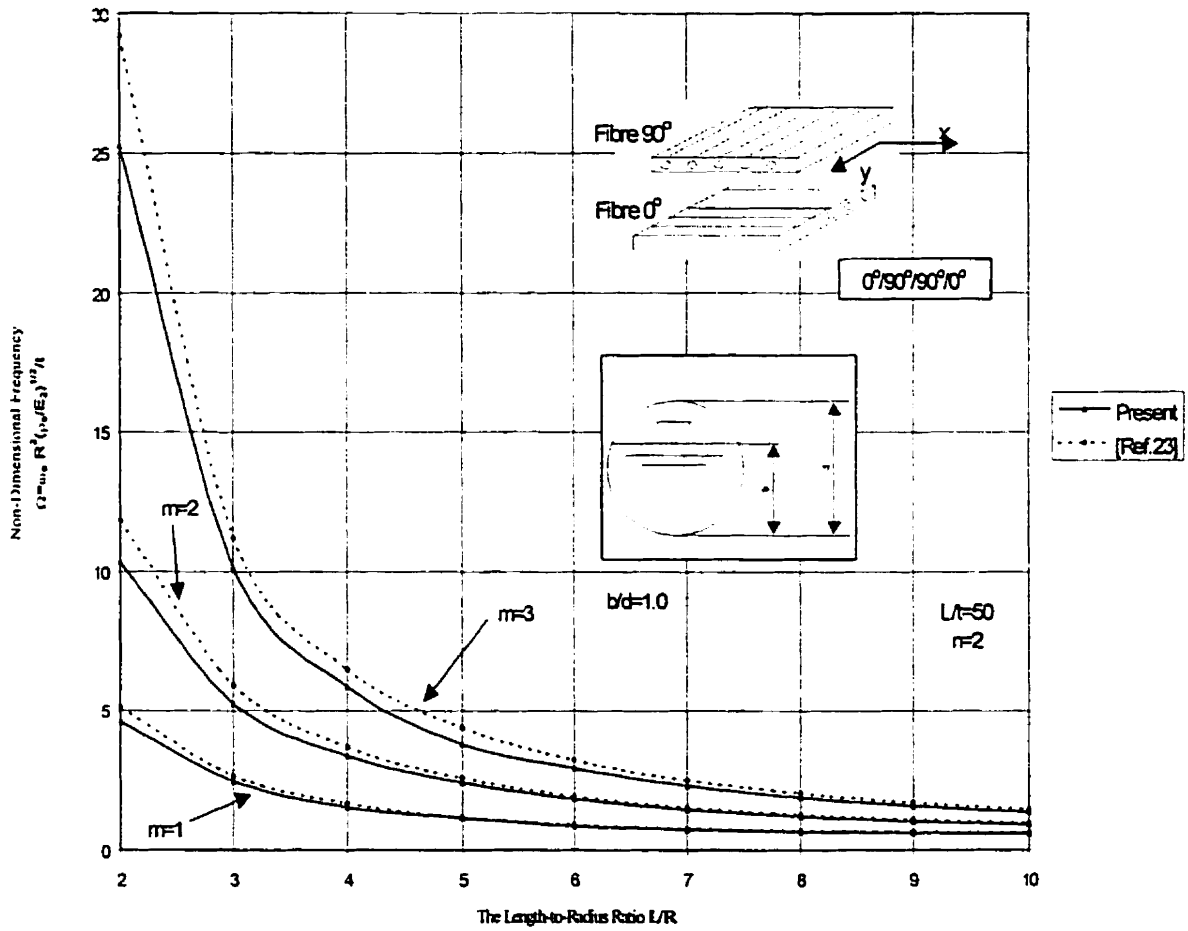

Figure 4.10 Frequency distribution (Ω) of a cross-ply fluid-filled shell for various axial mode number (*m*) (Anisotropic Materials).

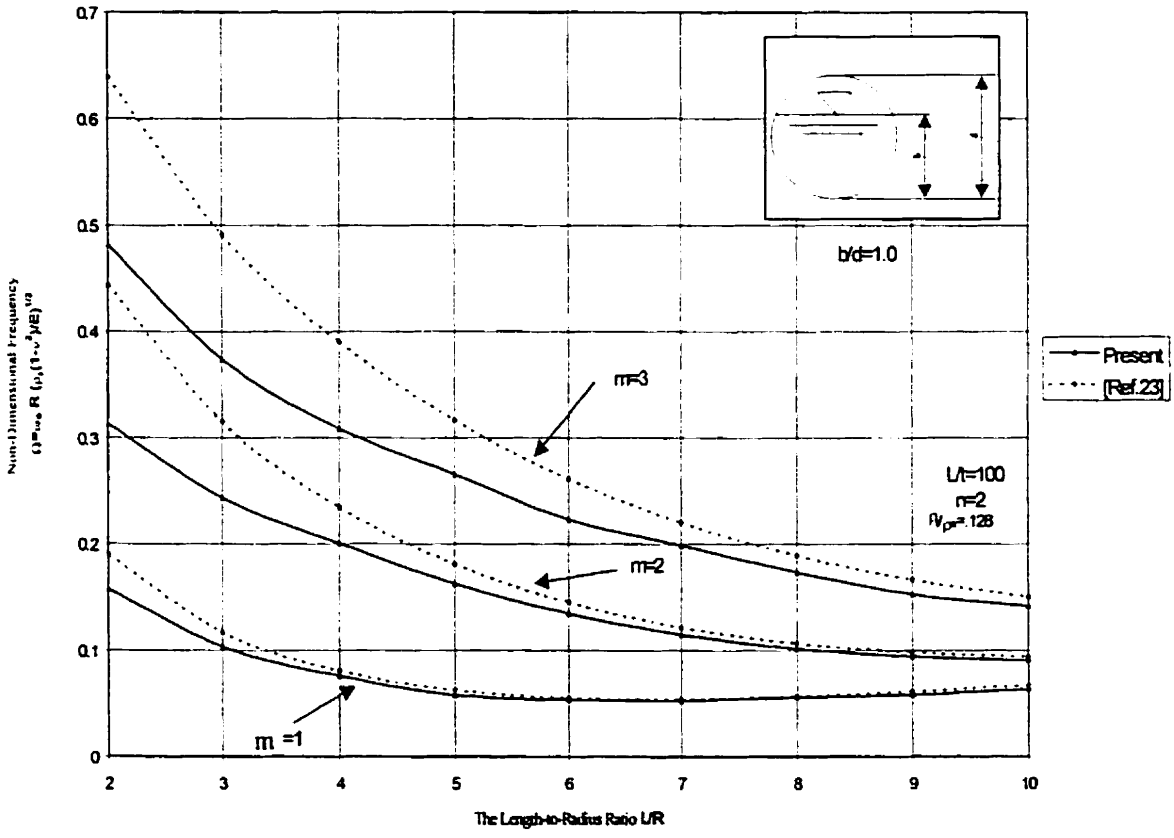

Figure 4.11 Variation of frequency parameter (Ω) of a fluid-filled shell in conjunction with ***L/R*** and ***m*** variations (Isotropic Materials).

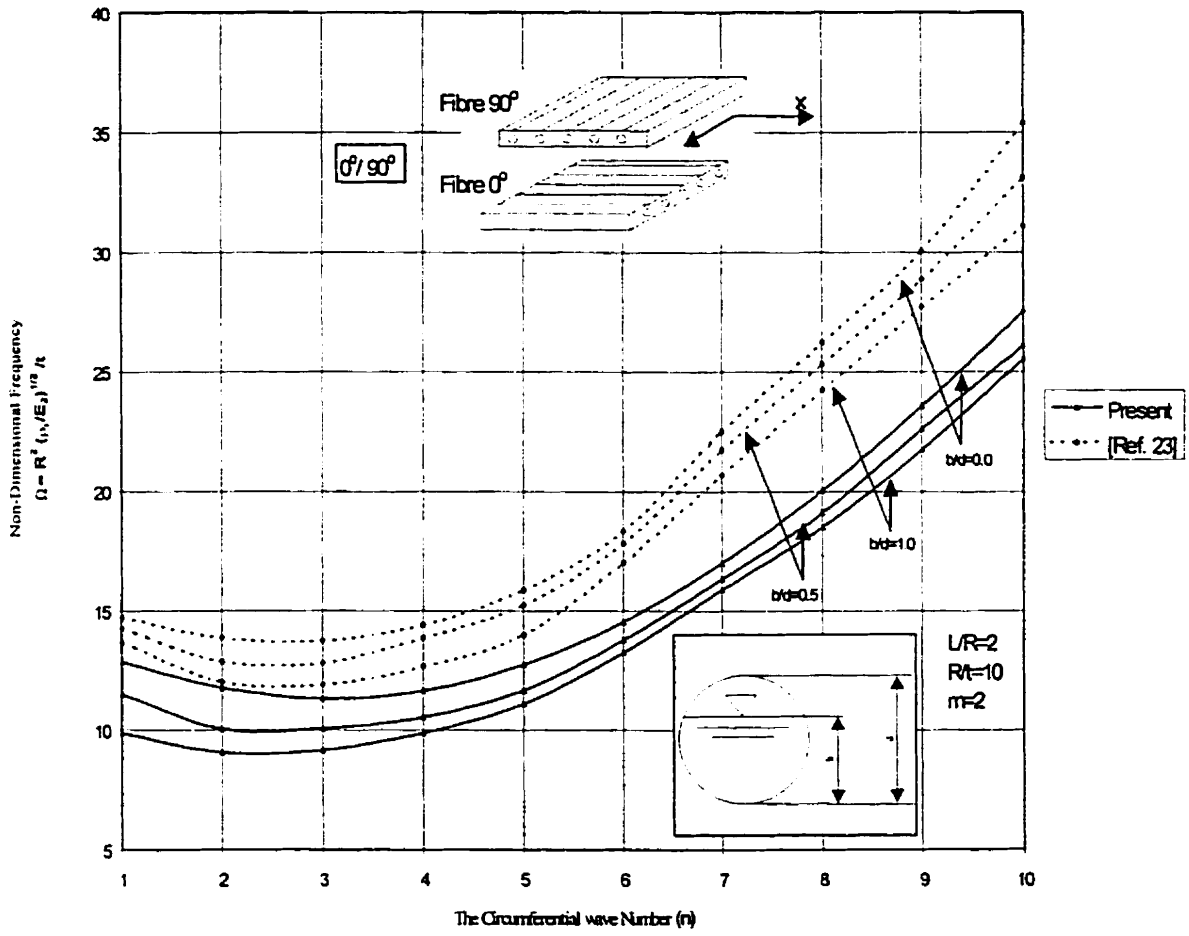

Figure 4.12 Frequency distribution (Ω) of a cross-ply fluid-filled cylindrical shells with respect to the liquid depth ratio (Anisotropic Materials).

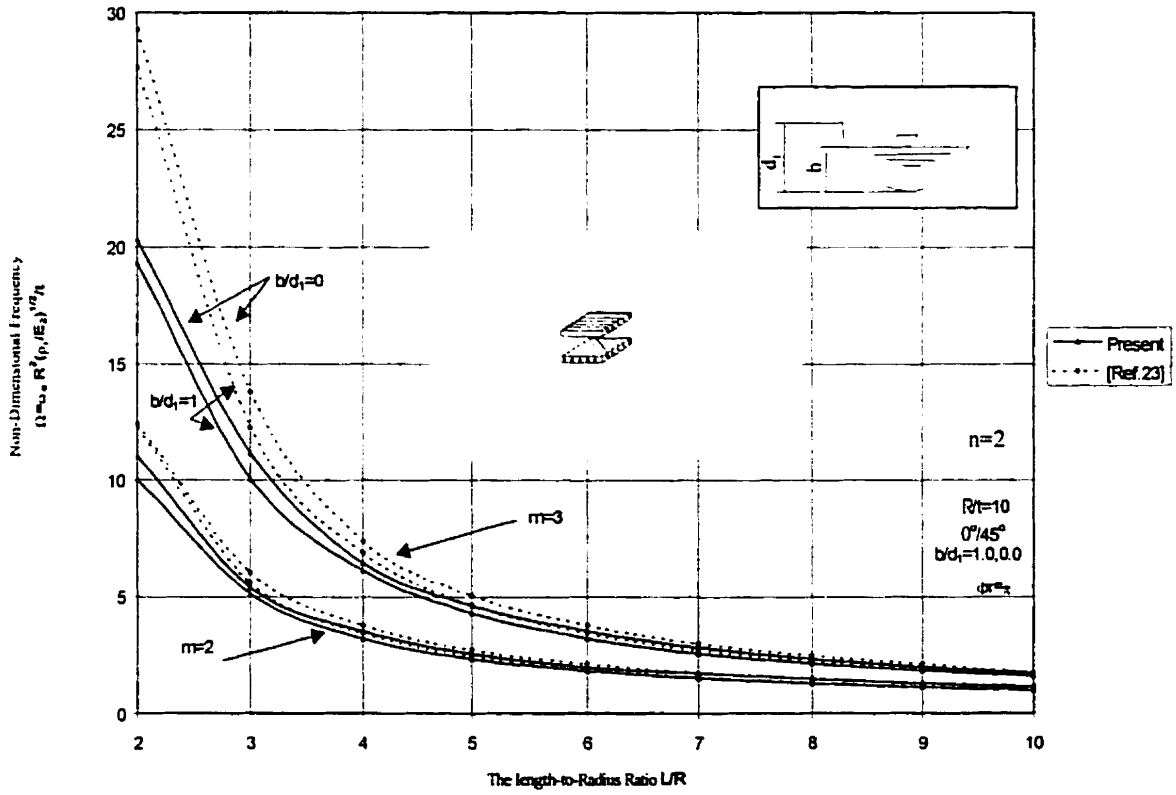

Figure 4.13 Variation of fundamental frequency parameter (Ω) of a fluid-filled angle-ply open cylindrical shell in terms of ***L/R***, ***m*** variations and the liquid depth ratio (Anisotropic Materials).

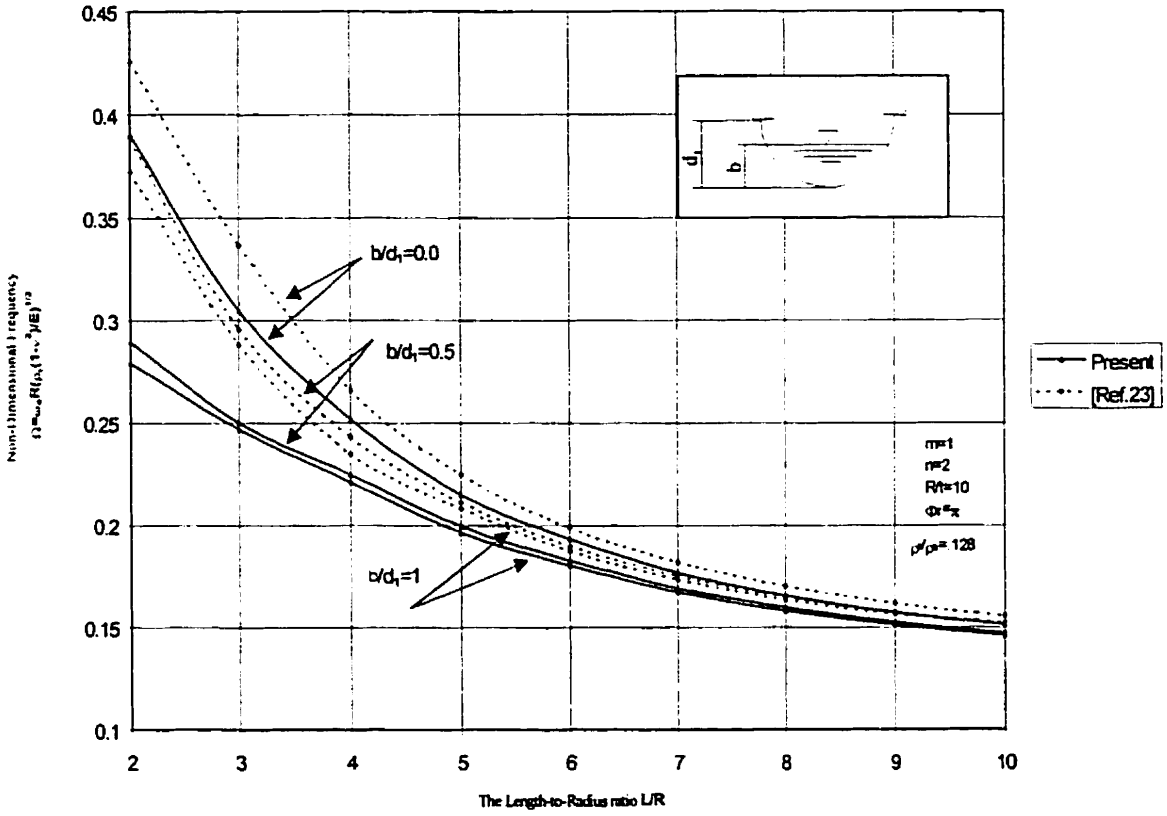

Figure 4.14 Frequency parameter (Ω) variation of clamped-clamped fluid-filled open cylindrical shell with respect to variation of ***L/R*** and the liquid depth ratio (Isotropic Materials).

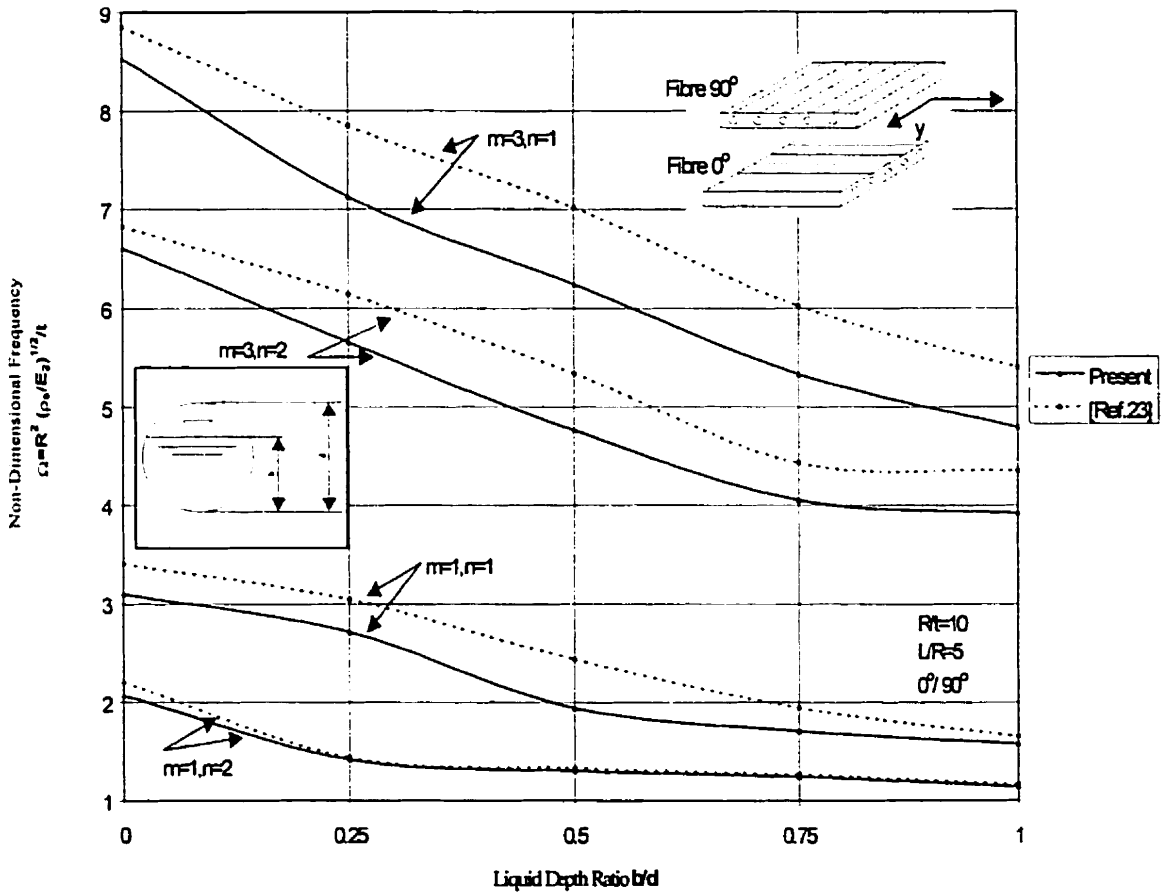

Figure 4.15 Frequency distribution (Ω) of fluid-filled cross-ply cylindrical shell for various number of (*m, n*) and the liquid depth ratio (*b/d*) (Anisotropic Materials).

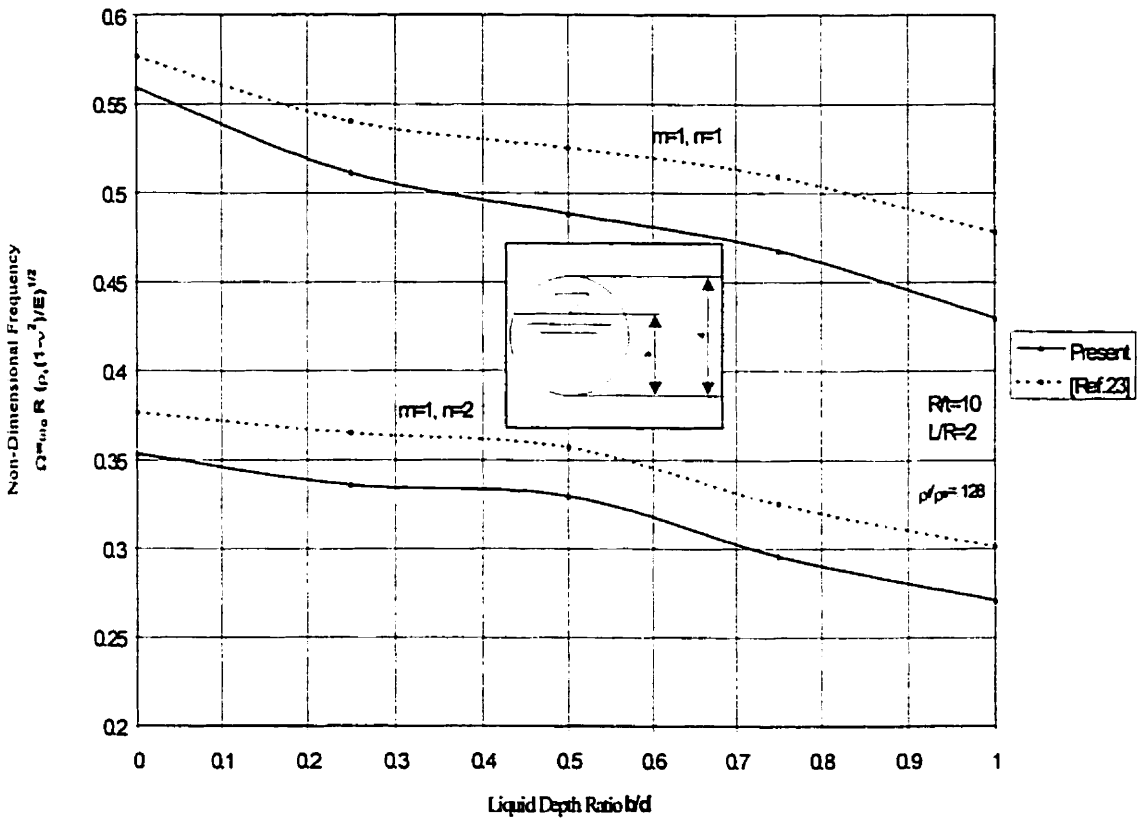

Figure 4.16 Variation of non-dimensional frequency (Ω) of a fluid-filled cylindrical shell as variations of ***b/d*** and (***n***) (Isotropic Materials).

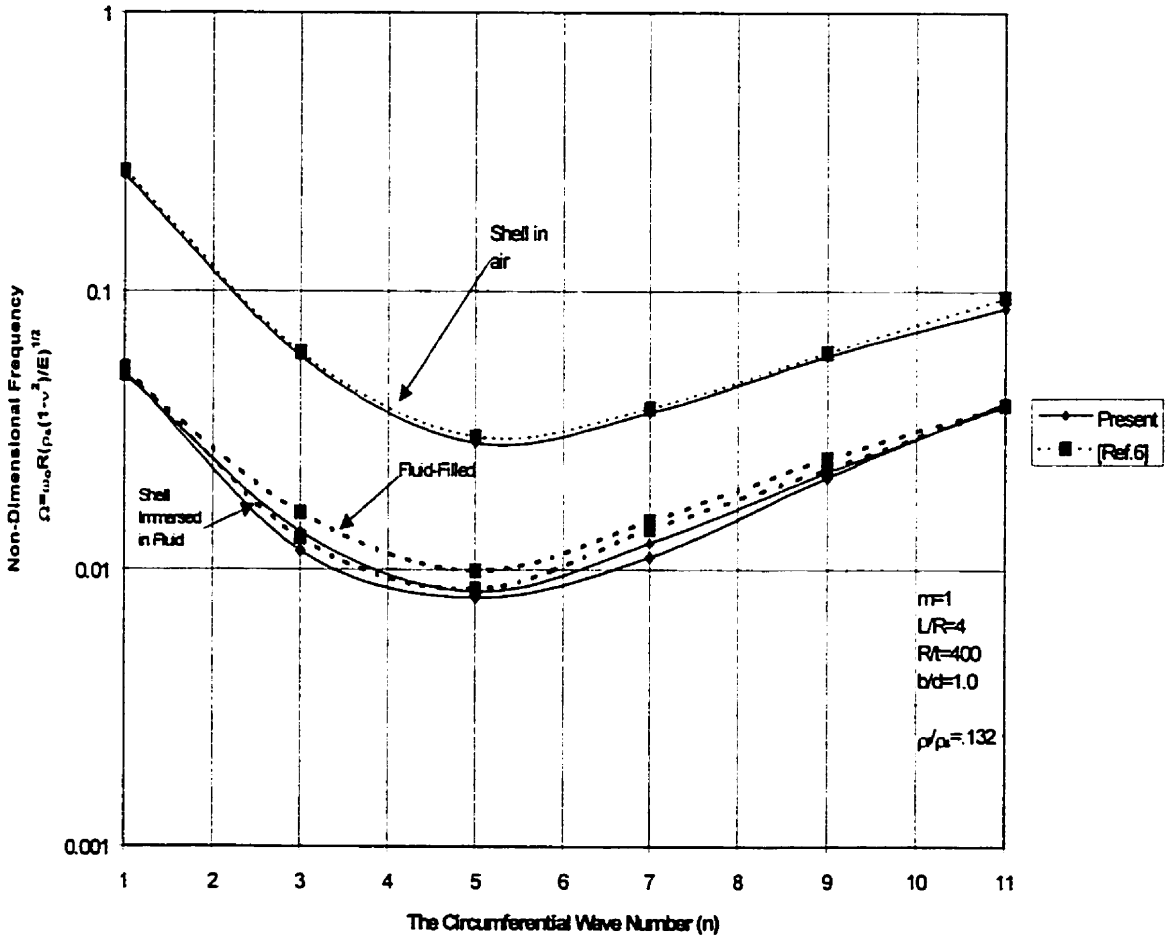

Figure 4.17 Frequency variation (Ω) of empty, fluid-filled and immersed in fluid shell with respect to *n* variations (Isotropic Materials)

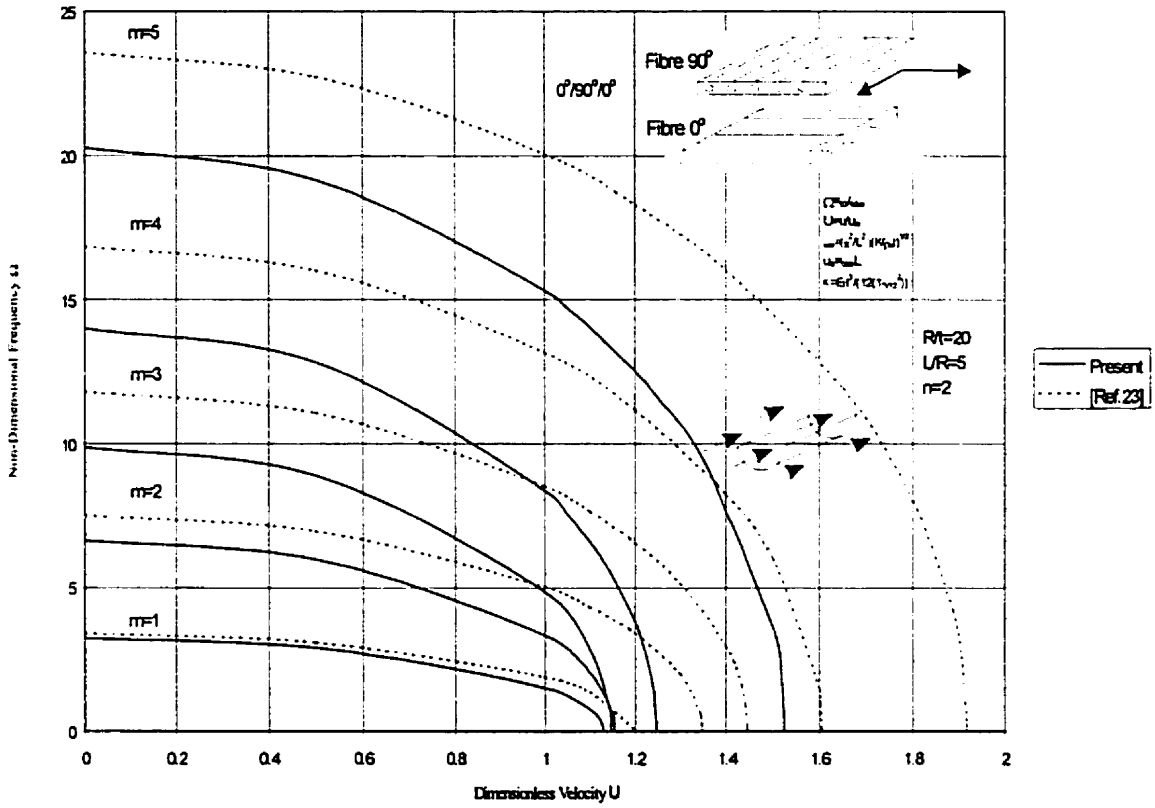

Figure 4.18 Stability of a cross-ply cylindrical shell containing a flowing fluid as a function of flow velocity (Anisotropic Materials).

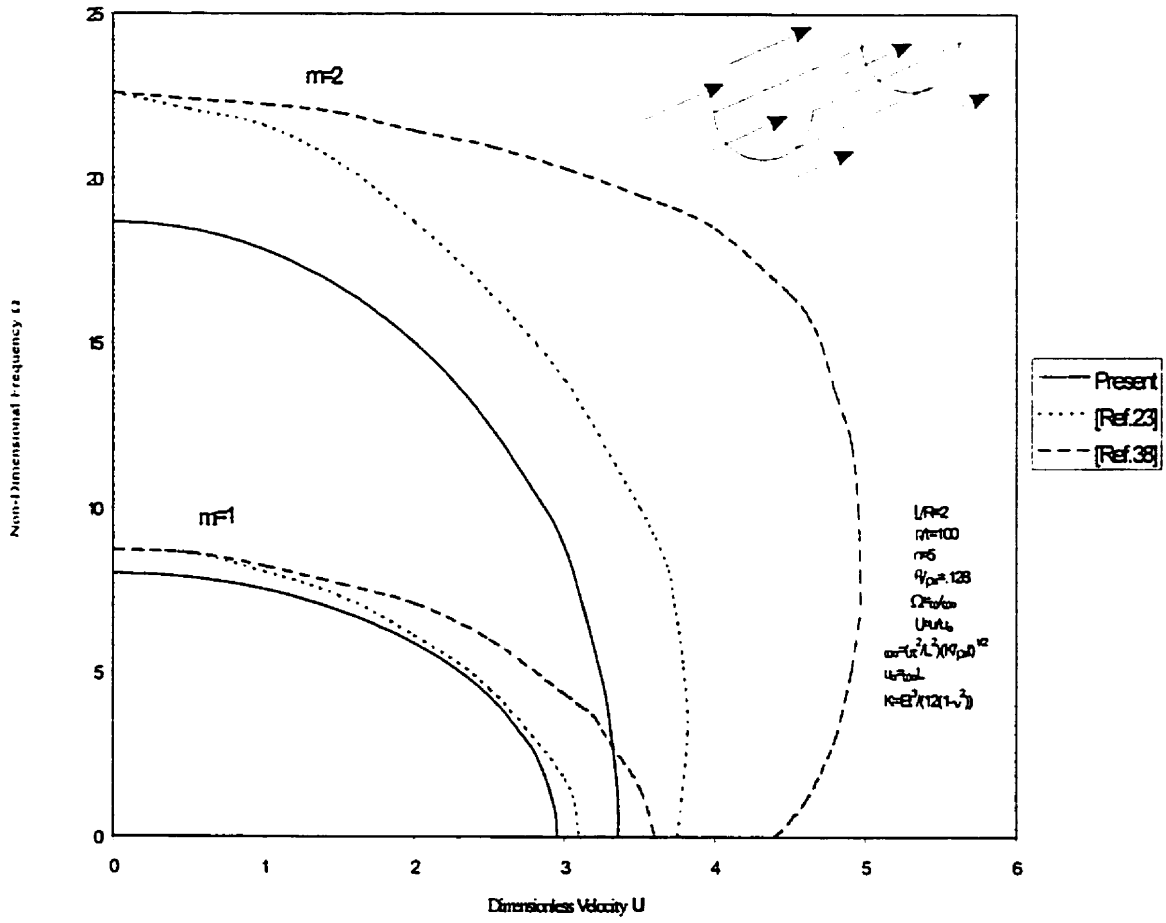

Figure 4.19 Stability of a simply-supported cylindrical shell as a function of flow velocity (internal flow, Isotropic Materials).

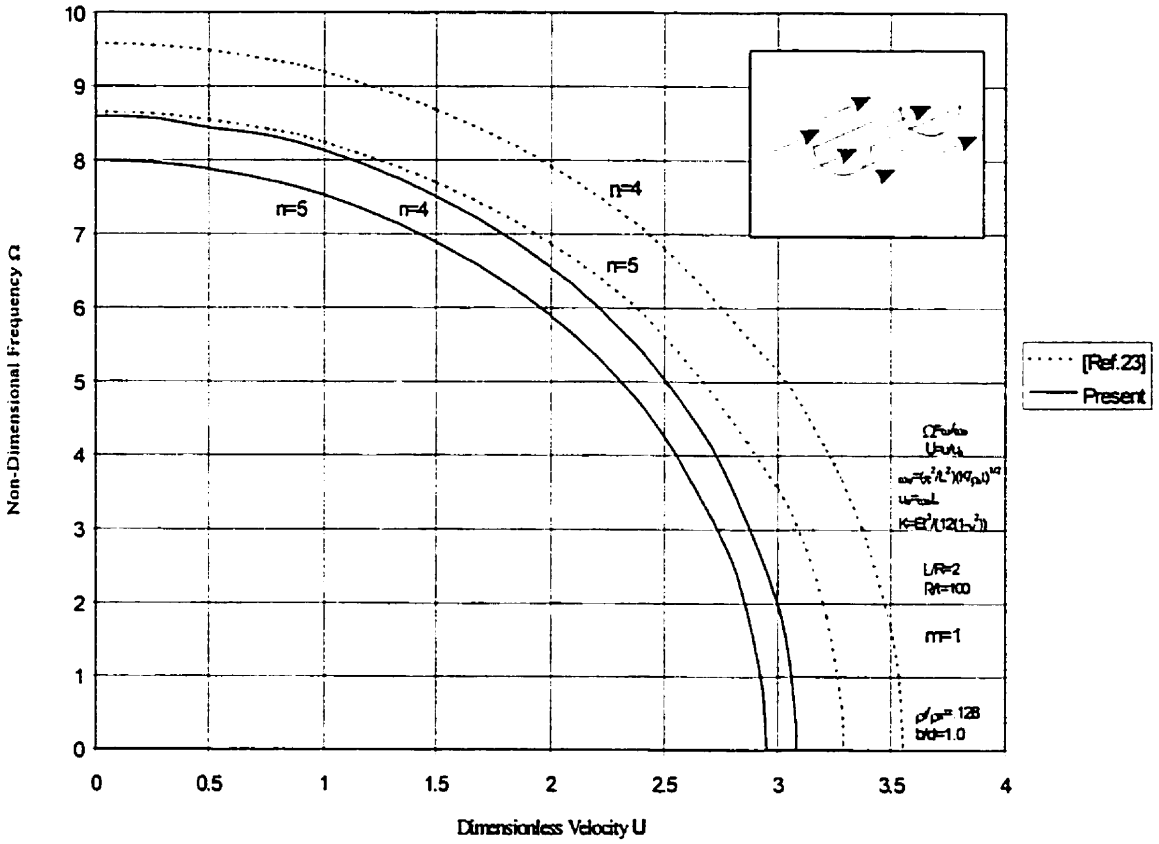

Figure 4.20 Stability of a cylindrical shell with respect to velocity of fluid for (n=4,5 Isotropic Materials).

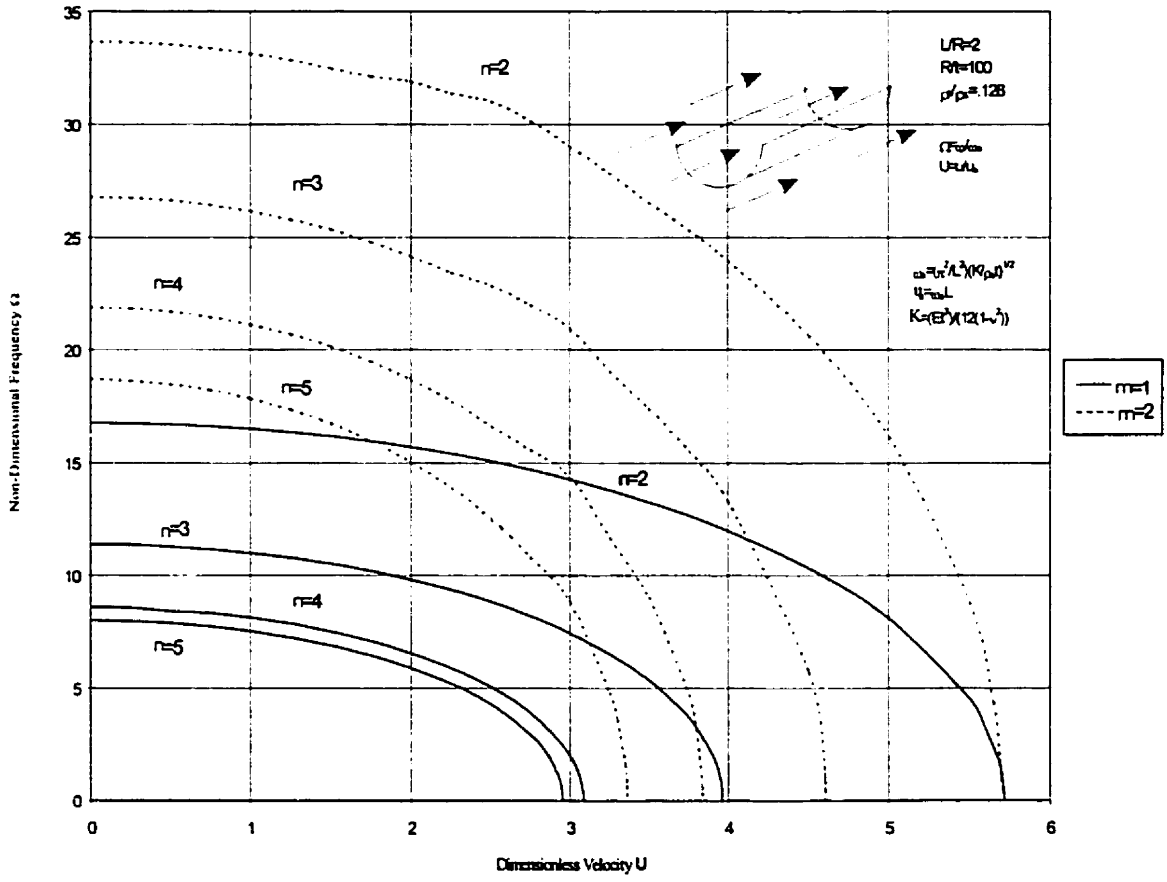

Figure 4.21 Stability of a cylindrical shell as a function of flow velocity (Isotropic Materials).

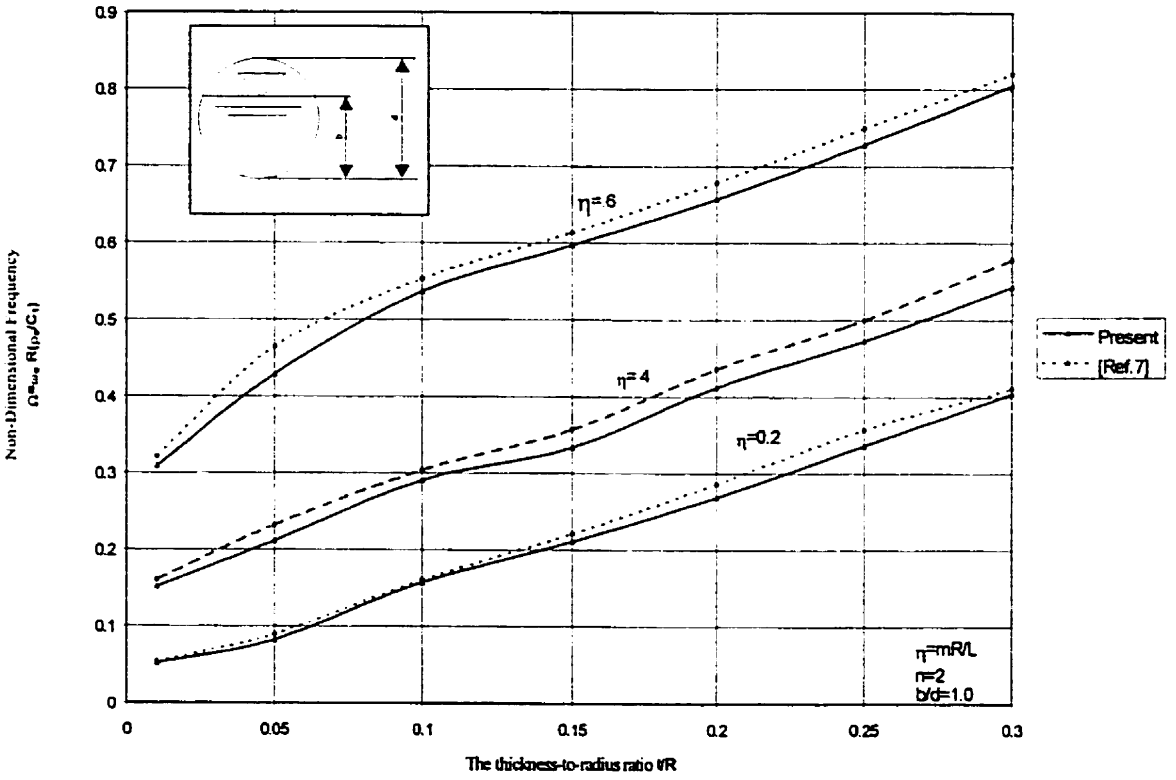

Figure 4.22 Lowest natural frequency parameter (Ω) of a fluid-filled cylindrical in conjunction with ***t/R*** variation (Anisotropic Materials).

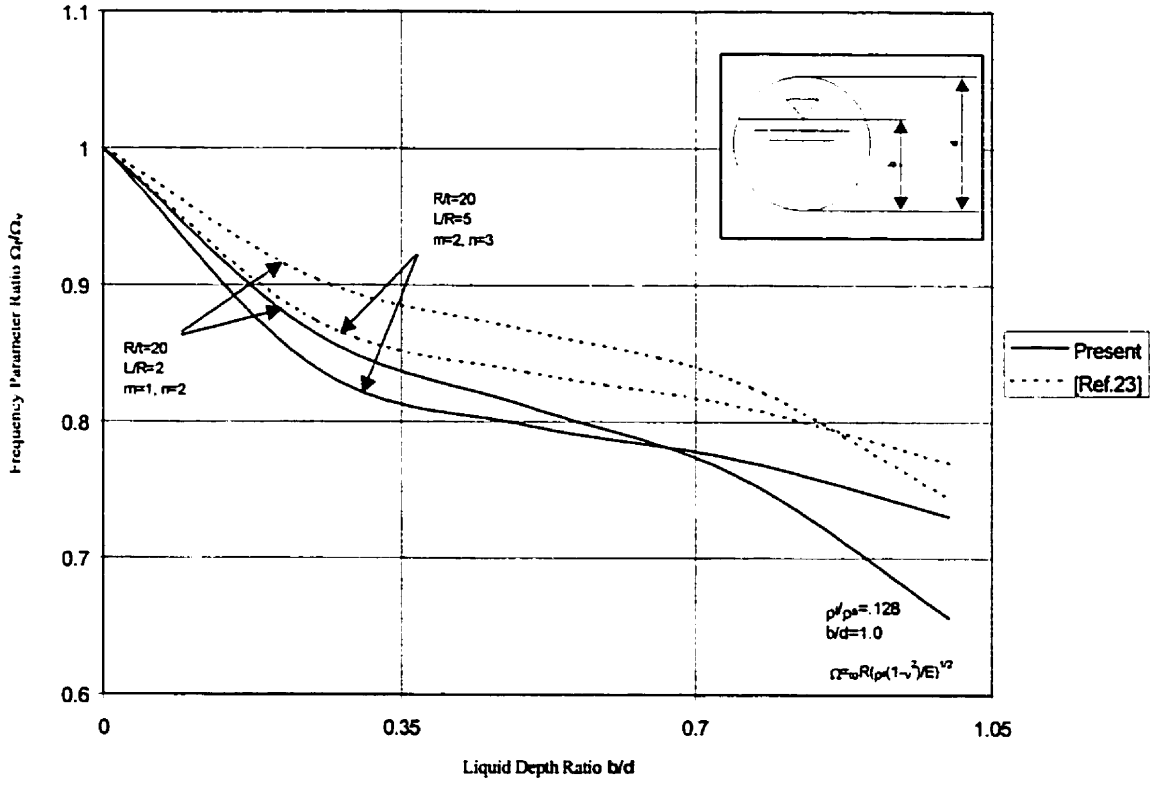

Figure 4.23 Variation of non-dimensional frequency parameter (Ω) with liquid depth ratio(b/d), L/R and (m, n) (Isotropic Materials).

CONCLUSION

Cette thèse avait pour but :

a) de développer des équations générales, par exemple les équations d'équilibre et de développer les relations constituantes et cinématiques pour l'analyse linéaire des coques anisotropes laminées et multicouches (avec des couches symétriques ou antisymétriques, couches orthogonales ou croisées) de forme générale avec la seule hypothèse de négliger la contrainte normale. Ce développement est basé sur une théorie des coques où les effets des déformations de cisaillement et de l'inertie de rotation aussi bien que de la courbure initiale sont pris en considération. Les déformations utilisées sont exprimées en coordonnées curvilignes orthogonales (les relations exactes de déformation-déplacements de Green). Le comportement dynamique des coques anisotropes est beaucoup plus sensible à ces effets que celui des coques isotropes.

Négliger les déformations de cisaillements peut conduire à une surestimation des fréquences. Ces erreurs sont encore plus grandes pour des plaques et des coques fabriquées en composites comme le graphite-epoxy et boron-epoxy dont le rapport de module d'élasticité/module de rigidité (E/G) est très grand (de l'ordre 25 à 40 au lieu d'environ 2,5

pour des matériaux isotropes).

On peut donc dire que les déformations de cisaillement jouent un rôle beaucoup plus important dans la résolution de la rigidité effective de flexion des plaques et des coques laminées. Toutefois, la sévérité des effets des déformations de cisaillement dépend aussi de l'anisotropie des couches. Les équations de mouvement sont déduites par l'application du principe du travail virtuel avec les déplacements et les rotations comme variables indépendantes.

b) d'appliquer les équations mentionnées ci-dessus aux différentes géométries des coques comme les coques de révolution, cylindriques, sphériques et coniques aussi bien que les plaques rectangulaires et circulaires. Les déformations de cisaillement ne disparaissent pas dans la présente théorie et par conséquent, les rotations βi, qui représentent la rotation de tangente à la surface de la référence, ne peuvent pas être exprimées en fonction des composantes du déplacement. C'est pourquoi cette théorie conduit à cinq équations différentielles - au lieu de trois équations comme dans le cas d'autres théories- du deuxième ordre, couplées et linéaires avec les coefficients constants.

c) d'analyser dynamiquement des coques cylindriques ouvertes ou fermées, minces, élastiques et anisotropes laminées multicouches. Les coques cylindriques sont considérablement utilisées dans diverses industries par exemple, l'industrie aérospatiale, l'industrie nucléaire et le domaine pétrolier, etc. C'est pourquoi les caractéristiques

dynamiques de ces coques avec ou sans fluide ont été considérablement étudiées par plusieurs chercheurs au cours des dernières années.

d) d'étudier les vibrations libres des coques cylindriques submergées et soumises simultanément à un écoulement d'un fluide. Le comportement des coques partiellement ou complètement remplies de liquide a été aussi analysé.

La méthode est basée sur la théorie raffinée des coques, qui prend en compte les effets des déformations de cisaillement, la mécanique des fluides et la méthode des éléments finis. Le modèle développé nous permet de déterminer les valeurs propres (fréquences naturelles) des coques cylindriques ouvertes et fermées, anisotropes et isotropes, vides, partiellement ou complètement remplies de liquide en régime stagnant ou en écoulement.

En premier lieu, nous avons développé un programme qui peut calculer la matrice d'élasticité pour un cas général (matériaux anisotropes ayant n couches avec des propriétés mécaniques et avec une orientation des fibres différentes d'une couche à l'autre). En effet, les éléments structuraux fabriqués en matériaux composites sont considérablement utilisés à cause des rapports avantageux de rigidité/poids et solidité/poids.

L'exactitude de la méthode de l'élément fini dépend du nombre et de la dimension des éléments entre lesquels la structure est divisée. L'approximation optimale des matrices de masse et de rigidité dépend de beaucoup de facteurs, le plus important étant le choix des

fonctions du déplacement qui satisfait le critère de la convergence de la méthode de l'élément fini. C'est pourquoi nous avons développé un élément fini, qui est de type coque cylindrique ouverte, où les fonctions de déplacement ne sont pas polynomiales comme c'est le cas avec la méthode des éléments finis classique, mais où elles sont dérivées de la théorie des coques cylindriques minces en coordonnées curvilignes orthogonales.

Cette méthode combine les avantages de la méthode des éléments finis qui traite des coques complexes (matériaux anisotropes multicouches, épaisseur variable, différentes conditions aux rives, etc.) et la précision de la formulation utilisant des fonctions de déplacement dérivées de la théorie raffinée des coques. L'ensemble des matrices, les matrices de masse et de rigidité qui décrivent leurs contributions relatives à l'équilibre sont déterminées par intégration analytique exacte.

Cette théorie donne les déformations nulles pour le mouvement du corps rigide afin que les fonctions des déplacements basées sur cette théorie satisfassent le critère de la convergence de la méthode des éléments finis. Les cinq équations différentielles de mouvement sont résolues conjointement avec cinq conditions aux rives à chaque bord par la méthode des éléments finis hybrides.

Le potentiel des vitesses, l'équation de Bernoulli et l'imperméabilité linéaire appliquée à l'interface de fluide-structure ont été utilisés afin de décrire une expression explicite pour la pression du fluide menant à trois forces (inertielle, centrifuge et de Coriolis)

du fluide en mouvement. Les matrices de masse, de rigidité et d'amortissement dues à l'effet du fluide peuvent être obtenues par une intégration analytique de la pression du fluide sur l'élément liquide.

Pour vérifier l'exactitude de cette théorie, les fréquences naturelles obtenues ont été comparées avec celles d'autres théories, par exemple la théorie classique des coques, la méthode des éléments finis, etc. Les résultats sont présentés pour des coques cylindriques fermées et ouvertes, isotropes et anisotropes laminées (symétriques ou antisymétriques, avec couches orthogonales ou croisées), vides, partiellement ou complètement remplies de fluide ou soumises à un écoulement avec différentes conditions aux rives.

Une étude paramétrique, y compris les différents modes circonférentiels et axiaux (***m***, ***n***), des paramètres de laminage (nombre de couches, séquence de couche et orientation des fibres), des différents rapports de ***R/t*** ; ***L/R*** ; ***L/t*** et du rapport de la hauteur du fluide (***b/d***) a été effectuée. Les résultats numériques concordent de façon raisonnable avec les résultats disponibles par d'autres théories.

Les résultats présentés indiquent que la théorie classique des coques conduit, en général, à une surestimation des fréquences naturelles surtout pour des coques anisotropes. La différence s'applique par le changement de l'angle de cisaillement d'une couche à l'autre et l'insensibilité de la méthode classique à ce changement.

Les fréquences naturelles des coques cylindriques remplies de liquide sont inférieures aux valeurs correspondantes des coques vides, à cause de l'augmentation de l'énergie cinétique du système sans augmentation correspondante de l'énergie de déformation. Les fréquences diminuent avec l'augmentation de la hauteur du fluide et cette diminution dépend des paramètres géométriques et physiques des fluides et structures.

Toutefois, ce modèle ne peut pas s'appliquer à des coques cylindriques épaisses, où les effets des contraintes normales doivent être pris en considération.

Nous pouvons donc dire que nous disposons d'une méthode adéquate afin de prédire les caractéristiques dynamiques des coques cylindriques anisotropes laminées multicouches, ouvertes ou fermées, soumises à un fluide en écoulement. Les coques ont des conditions frontières arbitraires sur les rives droites et elles sont simplement supportées selon leur rives courbes.

Les travaux effectués dans notre groupe de recherche ont pour but de développer un modèle numérique d'une coque vide, partiellement ou complètement remplie de liquide, avec ou sans l'effet de la surface libre (sloshing), soumise à un écoulement de fluide. Pour atteindre ce but, le groupe de recherche a déjà développé un élément cylindrique fermé et ouvert, conique, sphérique ainsi qu'une plaque circulaire et rectangulaire, en se basant sur la théorie de Sanders et aussi bien qu'un élément cylindrique ouvert en se basant sur une nouvelle théorie des coques (cette thèse).

La suite logique de cette étude serait l'analyse des coques cylindriques, anisotropes et ouvertes, qui peuvent être classées comme suit :

- Chargement

1) Étude de l'effet de la surface libre du fluide sur le comportement vibratoire des coques horizontales.

2) Étude des vibrations forcées d'une coque cylindrique soumise à un chargement dynamique.

3) Étude des excitations dues à un écoulement turbulent.

- Géométrie

1) Influence des non-linéarités géométriques des parois, dues à de grands déplacements et de grandes rotations, sur les fréquences naturelles des coques cylindriques.

2) Étude détaillée des effets de l'imperfection géométrique et de la présence des découpages (cutout) sur le comportement dynamique des coques.

- Matériaux

1) Étude de la sensibilité de la réponse dynamique des coques anisotropes multicouches aux variations de laminage (séquence de couche et orientation des fibres et

aussi coefficients des matériaux anisotropes).

2) Développement d'une technique numérique et pratique pour prédire l'initiation et propagation des défaillances, selon différents critères disponibles pour des matériaux composites - voir par exemple Tsai-Hill, Haffman; Chamis ; Tsai-Wu et la déformation maximale- dans les coques anisotropes soumises aux différentes conditions de chargement.

BIBLIOGRAPHIE

ATLURI , S. (1972). A Perturbation Analysis of Non-Linear Flexural Vibrations of a Circular Cylindrical Shell. Int. J. Solids Struct.,8, 549-569 .

AMBARTSUMYAN, S.A. (1964). Theory of Anisotropic Shells. NASA-TT-F-118.

AU-YANG, M.K. (1986). Dynamics of Coupled Fluid-Shells. ASME J. of Vibration, Acoustics and Reliability in Design ,108, 339-347.

BASAR , Y. et DING , Y. (1990). Finite Rotation Elements for the Non-Linear Analysis of Thin Shells Structures. Int. J. Solids Struct. ,26(1), 83-97.

BATHE , K.J. (1982). Finite Element Procedure in Engineering Analysis. Prentice-Hall.

BERT ,C.W. (1967). Structural Theory or Laminated Anisotropic Elastic Shells. J. Composite Materials ,1, 414-423.

BERT ,C.W. et FRANCIS, P.H. (1974). Composite Material Mechanics :Structural Mechanics. AIAA Journal ,12(9), 1173-1186.

BERT , C.W. et Chen , T.L.C. (1978). Effect of Shear Deformation on Vibration

of Anti-symmetric Angle-Ply Laminated Rectangular Plates. Int. J. Solids and Structures,14, 465-473.

BERT ,C.W. et KUMAR , M. (1982). Vibration of Cylindrical Shells of Bimodulus Composite Materials. J. of Sound and Vibration ,81(1), 107-121.

BERT ,C.W. et REDDY ,V.S. (1982). Cylindrical Shells of Bimodulus Materials. J. of the Engineering Mechanics Division ,ASCE ,8(EM5), 675-688.

BHIMARADDI , A. (1984). A Higher Order Theory for Free Vibration Analysis of Circular Cylindrical Shells. Int. J. Solids Structures. ,20 (7) ,623-630.

BOGNER , F.K., FOX, R.L. et SCHMIT, L.A. (1967). A Cylindrical Shell Discrete Element. AIAA J.,5, 745 -750.

BRENNEMAN , B. et AU-YANG, M.K.(1992). Fluid-Structure Dynamics with Modal Hybrid Method. J. of Pressure Vessel Technology ,114,133-138.

BROWN, S.J. (1982). A Survey of Studies Into the Hydrodynamic Response of Fluid-Coupled Circular Cylinders. ASME J. of Pressure Vessels Techn. ,104, 2-19.

BUDIANSKY, B. (1968). Note on Nonlinear Shell Theory. J. Appl. Mech., 35, 393-401.

BUDIANSKY, B. et RADKOWSKI, P. (1963) Numerical Analysis of Unsymmetrical Bending of Shells of Revolution. J. AIAA, 1(8), 1833-1842

CHEN, J.C. et BABCORK ,C.D. (1975). Non-Linear Vibration of Cylindrical Shells. AIAA J., 13, 868-876.

CHEN , L. (1994). Fluid-Structural Coupling of a Plate Ended Cylindrical Shell: Vibration and Internal Sound Field. J. of Sound and Vibration ,174, 641-654.

CHENG , S. et HO , B.P. (1963). Stability of Heterogeneous Aeolotropic Cylindrical Shells Under Combined Loading. AIAA Journal ,1(4) , 892-898.

CHENG, S. (1973). On An Accurate Theory for Circular Cylindrical Shells. Journal of Applied Mechanics ,40,582-588.

CHENG, S. et HE ,F.B. (1984). Theory of Orthotropic and Composite Cylindrical Shells, Accurate and Simple Fourth Order Governing Equations. J. of Applied Mech. , 51, 736-744.

CROUZET-PASCAL et GARNET , H. (1972). Response of a Ring -Reinforced Cylindrical Shell, Immersed in a Fluid Medium, to an Axisymmetric Step Pulse. J. of Applied Mechanics, 521-526.

DATT , G. et TOUZOT ,G. (1984). Une Présentation de la méthode des éléments finis. MOLOINE, S.A., Editeur Paris.

DENNIS , S.T. et PALAZOTTO , A.N. (1990). Static Response of a Cylindrical Composite Panel with Cutouts Using a Geometrically Non-Linear Theory. AIAA J. ,28(16), 1082-1088.

DI SCIUVA M. (1987). An Improved Shear Deformation Theory for Moderately Thick Multilayered Anisotropic Shells and Plates. ASME J. Appl. Mech ,54,589-596.

DI, S.L. et CHEUNG, Y.K. (1991). On the Hybrid/Mixed Finite Element Method with Energy Constraints. Comp.&Struc., 3, 461-474.

DONG ,S.B., PISTER, K.S. et TAYLOR, R.L. (1962). On the Theory of Laminated Anisotropic Shells and Plates. J. of Aero Sci. ,29 ,969-975.

DONG, S.B. (1968). Free Vibration of Laminated Orthotropic Cylindrical Shells. J. Acoust. Soc. Am, 44 (6), 1628-1635.

DONG ,S.B. et TSO, F.K.W. (1972). On a Laminated Orthotropic Shell Theory Including Transverse Shear Deformation. J. Applied Mechanics, 39,1091-1096.

DONNELL, L.H. (1933). Stability of Thin Walled Tubes Under Torsion. NACA Report No. 479.

DOWELL , E.H. et VENTRES , C.S. (1968). Modal Equations for Non-Linear Flexural Vibrations of Cylindrical Shells. Int.J. Solids Struct. ,4, 975-991.

FIGUEIRAS , J.A., et OWEN , D.R.J. (1984). Analysis of Elasto-Plastic and Geometrically Non-Linear Anisotropic Plates and Shells. Finite Element Software for Plates and Shells ,edited by HINTON et OWEN , Pineridge Press .

FLÜGGE ,W. (1960). Stresses in Shells. Julius Springer , Berlin ,Germany.

FLÜGGE , W. et KELKAR , V.S. (1968). The Problem of an Elastic Circular Cylinder. Int.J. of Solids & Structures ,4, 397-420.

GALLAGHER ,R.H. (1986). Introduction aux éléments finis. Prentice-Hall.

GONÇALVES , P.B. et BATISTA , R.C. (1987). Frequency Response of Cylindrical Shells Partially Submerged or Field with Liquid. J. of Sound and Vibration ,113(1), 59-70.

GRIGOLYUK , E.I. et KULIKOV , G.M. (1988). General Direction of Development of the Theory of Multilayered Shells. Mechanics of Composite Materials ,24(2), 231-241.

GULATI, S.T. et ESSENBERG , F. (1967). Effects of Anisotropy in Axisymmetric Cylindrical Shells. J. of Applied Mechanics ,34, 650-666.

HAN , R.P.S. et LIU , J.P. (1994). Free Vibration Analysis of a Fluid-Loaded Variable Thickness Cylindrical Tanks. J. of Sound and Vibration ,176(2), 235-253.

HILDERBRAND , F.B. , REISSNER , E. et THOMAS, G.B. (1949). Notes on the Foundations of the Theory of Small Displacements of Orthotropic Shells. NACA-TN-1833.

HINRICHSEN , R.L. et PALAZOTTO , A.N. (1986). Non-Linear Finite Element Analysis of Thick Composite Plates Using a Cubic Spline Function. AIAA J. ,24(11) ,1836-1842.

HSU ,T.M. et WANG , J.T.S. (1970). A Theory of Laminated Cylindrical Shells

Consisting of Layers of Orthotropic Lamina. AIAA Journal ,8(12), 2141-2146.

HSU , Y.S. , REDDY , J.N. et BERT , C.W. (1981). Thermoelasticity of Circular Cylindrical Shells Laminated Bimodulus Composite Materials. J. of Thermal Stresses ,4, 155-177.

IU, V.P. et CHIA, C.Y. (1988). Non-Linear Vibration and Post-Buckling of Unsymmetric Cross-Ply Circular Cylindrical Shells. Int. J. Solids Struct.,24 ,195-210.

JAIN , R.K. (1974). Vibration of Fluid-Filled ,Orthotropic Cylindrical Shells. J. of Sound and Vibration, 37(3), 379-388.

JI-FAN HE (1995). Static Analysis of Laminated Shells Using a Refined Shear Deformation Theory. J. of Reinforced Plastics and Composites ,14, 652-674.

JING , H.S. et LIAO, M.L. (1989). Partial Hybrid Stress Element for the Analysis of Thick Laminated Composite Plates. Int. J. Numer. Meth. Engng ,28, 2813-2827.

JING , H.S. et TZENG , K.G. (1993). Approximate Elasticity Solution for Laminated Anisotropic Finite Cylinders. AIAA J. , 31(11), 2121-2129.

JING , H.S. et TZENG , K.G. (1993b). Refined Shear Deformation Theory of Laminated Shells. AIAA J., 31(4), 765-773,1993.

JONES , R. J. (1975). Mechanics of Composite Materials. McGraw-Hill.

KANT , T. et RAMESH , C.K. (1976) . Analysis of Thick Orthotropic Shells. Proc.

,I.A.S.S. World Congress on Space Enclosures ,Montreal Canada ,401-409.

KANT , T. et KOMMINENI (1992). Geometrically Non-Linear Analysis of Doubly Curved Laminated and Sandwich Fibre Reinforced Composite Shells with a Higher Order Theory and C° Finite Elements. J. of Reinforced Plastics and Composites ,11, 1049-1076.

KANT, T. et KOMMINENI. (1994). Geometrically Non-Linear Transient Analysis of Laminated Composite and Sandwich Shells with Refined Theory and C° Finite Elements. Computers &Structures ,52(6), 1243-1259.

KHOT, N.S. (1970). Buckling and Post-buckling Behaviour of Composite Cylindrical Shells Under Axial Compression. AIAA J.,8, 229-235.

KOITER , W. T. (1960). A Consistent First Approximation in the General Theory of Thin Elastic Shells. Pro. Sym. on Theory of Thin Elastic Shells , Amsterdam ,North Holland ,12-32.

KRAUS , H. (1967). Thin Elastic Shells. John Wiley & Sons.

KUI , L.X , LIU, G.Q. et ZIENKIEWICZ , O.C. (1985). A Generalized Method for the Finite Element Analysis of Thin Shells. IJNME ,21(12) , 2145-2155.

LAKIS , A .A et PAÏDOUSSIS , M. P. (1971). Free Vibration of Cylindrical Shells Partially Filled with Liquid. J. of Sound and Vibration ,19,1-15.

LAKIS , A. A et PAÏDOUSSIS ,M.P (1972). Prediction of the Response of a Cylindrical Shell to Arbitrary of Boundary Layer-Induced Random Pressure Field. J.of

Sound and Vibration,25, 1-27.

LAKIS , A.A. et PAÏDOUSSIS , M.P. (1972). Dynamic Analysis of Axially Non-Uniform Thin Cylindrical Shells. J. Mech. Eng. Science,14(1), 49-71.

LAKIS , A.A. (1976). Effects of Fluid Pressures on the Vibration Characteristics of Cylindrical Vessels. Proc. Of the Int. Conf. on Pressure Surges, London ,UK, 11-15.

LAKIS , A.A. et DORÉ , R. (1978). General Method for Analysing Contact Stresses on Cylindrical Vessels. Int. J. Solids and Structures ,14(6),499-516.

LAKIS, A.A., SAMI, S.M. et ROUSSELET, J. (1978). Turbulent Two Phase Flow Loop Facility for Predicting Wall-Pressure Fluctuations and Shell Response. 24th Int. Instrumentation Symposium Albuquerque, New Mexico.

LAKIS , A.A. , TUY , N.Q. et SELMANE , A.(1989). Analysis of Axially Non-Uniform Thin Spherical Shells. Proc. of the Int. Symposium on Structural Analysis and Optimization , Paris, France, 80-85.

LAKIS , A.A. et SELMANE , A.(1990). Analysis of Non-Uniform Circular and Annular Plates. Proc. of Third Int. Con. on Numerical Methods in Engineering, Swansea ,UK, 239-248.

LAKIS , A.A. et LAVEAU , A. (1991). Non-Linear Dynamic of Anisotropic Cylindrical Shells Containing A Flowing Fluid. Int. J. Solids and Structures ,28(9), 1079-1094.

LAKIS , A.A. et SINNO , M. (1992). Free Vibration of Axisymmetric and Beam-Like Cylindrical Shells, Partially Filled with Liquid. Int. J. For Num. Meth. in Eng. ,33, 235-268.

LAKIS , A.A. ,VAN DYKE , P. et OURICHE, H.(1992). Dynamic Analysis of Anisotropic Fluid-Filled Conical Shells. J. of Fluids and Structures,6, 135-162.

LEISSA , A.W. (1973). Vibration of Shells. NASA SP-288.

LESTINGI , J.F. et PADOVAN , J. (1973). Numerical Analysis of Anisotropic Rotational Shells Subjected to Non-Symmetric Loads. Computers& Structures ,3, 133-147.

LEVINSON, M. (1980). An Accurate Simple Theory of the Static and Dynamics of Elastic Plates. Mechanics Research Communications, 7, 343-350

LIBRESCU, L. (1987). Refined Geometrically Nonlinear Theories of Anisotropic Laminated Shells.
Quart. Appl. Math. , 45 ,1-22.

LIBRESCU , L. et SCHMIDT, R. (1988). Refined Theories of Elastic Anisotropic Shells Accounting for Small Strains and Moderate Rotations. Int. J. Non-Linear Mech., 23,217-229 .

MARTIN, R.E. et DREW D. (1971). Non-Linear Analysis of Anisotropic Shells of Revolution. Texas A&M University, INST of STATISTIC ,29P.

MEROUEH , K.A. (1986). On a Formulation of a Non-Linear Theory of Plates and

Shells with Applications. Computers and Structures,24(5), 691-705.

MINDLIN, R.D. (1951). Influence of Rotary Inertia and Shear on Flexural Motions of Isotropic, Elastic Plates. J. Appl. Mech. , 18 (Trans ASME 73) A31.

MINDLIN , R.D. et MEDICK, M.A. (1959). Extensional Vibrations of Elastic Plates. Journal of Appl. Mech. , 26, 561-569.

MOLLMAN , H. (1981). Introduction to the Theory of Thin Shells. John Wiley & Sons.

MURAKAMI , H. (1986). Laminated Composite Plate Theory with Improved In-Plane Responses. J. of Applied Mechanics ,53 , 661-666.

NAGHDI , P.M. (1956). A Survey of Recent Progress in the Theory of Elastic Shells. Applied Mechanics Reviews ,9(9), 365-388.

NAGHDI , P.M. (1957). On the Theory of Thin Elastic Shells. Quart. Appl. Math. ,14,369- 380.

NIORDSON , F.I. (1980). Introduction to Shell Theory. Technical University of Denmark.

NOOR , A. K. et HARTLEY , S.J. (1977) . Non-Linear Shell Analysis via Mixed Isoparametric Elements. Computers&Structures ,7, 615-626.

NOOR , A.K. et PETERS, J.M. (1986). Non-Linear Analysis of Anisotropic Panels.

AIAA J. 24(9),1545-1553.

NOOR, A.K. et PETERS, J.M. (1987). Vibration Analysis of Laminated Anisotropic Shells of Revolution. Computer Meth. in Appl. Mech. and Eng. ,61, 277-301.

NOVOZHILOV , V.V. (1953). Foundations of the Nonlinear Theory of Elasticity. Graylock Press, Rochester, New York

NOVOZHILOV , V.V. (1959). The Theory of Thin Shells. P. Noordhoff Ltd.

PADOVAN , J. et LESTINGI , J.F. (1974). Complex Numerical Integration Procedure for Static Loading of Anisotropic Shells of Revolution. Computers & Structures , 4, 1159-1172.

PAGANO ,N.J. (1970). Influence of Shear Coupling in Cylindrical Bending of Anisotropic Laminates. Journal of Composite Materials ,4, 330-343.

PAGANO ,N.J. (1970). Exact Solutions for Rectangular Bidirectional Composites and Sandwich Plates. Journal of Composite Materials, 4, 20-34.

PAGANO ,N.J. et WANG , A.S.D. (1971). Further Study of Composite Laminates Under Cylindrical Bending. Journal of Composite Materials , 5 , 521-528.

PAGANO , N.J. (1972). The Stress Field in a Cylindrically Anisotropic Body Under Two-Dimensional Surface Traction. J. of Appl. Mech. ,39, 791-796.

PAÏDOUSSIS , M.P. et DENIS , J.P. (1972). Flutter of Thin Cylindrical Shells

Conveying Fluid. J. of Sound and Vibration, 20, 9-26.

PAÏDOUSSIS , M. P. et LI , G.X. (1993). Pipes Conveying Fluid: A Model Dynamical Problem. J. of Fluids and Structure ,7, 137-204.

PALAZOTTO , A.N. et WITT, W.P. (1985). Formulation of a Non-Linear Compatible Finite Element for Analysis of Laminated Composites. Computers& Structures ,21,1213-1234.

PHAN , N.D. et REDDY, J.N. (1985). Analysis of Laminated Composite Plates Using a Higher Order Shear Deformation Theory. IJNME , 21(12), 2201-2219.

PRYOR , C.W. et BARKER , R.M. (1971). A Finite Element Analysis Including Transverse Shear Effects For Applications to Laminated Plates. AIAA J.,9(5), 912-917.

RAMACHANDRAN, J. (1979). Non-Linear Vibrations of Cylindrical Shells of Varying Thickness in an Incompressible Fluid. Journal of Sound and Vibration ,64,97-106.

REDDY, J.N. et CHAO , W.C. (1981). A Comparison of Close Form and Finite Element Solutions of Thick ,Laminated ,Anisotropic Rectangular Plates. Nuclear Engineering and Design ,64,153-167.

REDDY, J.N. (1984). A Refined Nonlinear Theory of Plates with Transverse Shear Deformation. Int. J. Solids Structures ,20 (9/10) ,881-896.

REDDY , J. N. (1984). An Introduction to the Finite Element Method. McGraw-Hill.

REDDY, J. N. (1984). Energy and Variational Methods in Applied Mechanics. John Wiley& Sons.

REDDY , J.N. (1984). A Simple Higher Order Theory for Laminated Composite Plates. Journal of Applied Mech. ,51,745-752.

REDDY, J.N. et PHAN , N.D. (1985). Stability and Vibration of Isotropic , Orthotropic and Laminated Plates According to a Higher Order Shear Deformation Theory. Journal of Sound and Vibration, 98(2),157-170.

REISSNER , E. (1950) . On a Variational Theorem in Elasticity. J. Math. and Physics , 29 ,90-95.

REISSNER ,E. (1952). Stress-strain Relation in The Theory of Thin Elastic Shells. J. Math. Phys.,31, 109-119.

REISSNER ,E. (1955). Non-Linear Effects in Vibrations of Cylindrical Shells. Report No. AM5-6, Ramo-Wooldrige Corp.

REISSNER ,E. Et STAVSKY, Y. (1961). Bending and Stretching of Certain Types of Heterogenous Aeolotropic Elastic Plates. J. of Applied Mechanics, 28(3), 402-408

REN-HUAI , L. et LING -HUI, H. (1991). A Simple Theory for Non-Linear Bending of Laminated Composite Rectangular Plates Including Higher-Order Effects. Int. J. Non-Linear Mech. 26(5), 537-545.

ROTHERT , H. et DI S. (1994). Geometrically Nonlinear Analysis of Laminated

Shells by Hybrid Formulation and Higher Order Theory. IASS Bulletin ,35(114) ,15-32.

ROTTER , J.M. et JUMIKIS, P.T. (1988). Non-Linear Strain-Displacement Relations for Axisymmetric Thin Shells. Research Report No.R563 ,The University of Sydney ,45 P.

SAADA , A.S. (1993). Elasticity Theory and Applications. Pergamon Press.

SANDERS, J. L. (1959). An Improved First Approximation Theory for Thin Shells. NASA , TR R-24 ,1-23.

SANDERS, J. L. (1962). Nonlinear Theories for Thin Shells. Appl. Math. , XXI(1) , 21-36.

SCHMIT , L.A. et MONFORTON , B.R. (1970) Finite Deflection Discrete Element Analysis of Sandwich Plates and Cylindrical Shells with Laminated Faces. AIAA J. ,8(8), 1434-1461.

SELMANE , A. et LAKIS , A.A. (1997). Dynamic Analysis of Anisotropic Open Cylindrical Shells. J. of Computers & Structures, 62(1),1-12.

SELMANE , A. et LAKIS , A. A. (1997). Vibration Analysis of Anisotropic Open Cylindrical Shells Containing Flowing Fluid. Journal of Fluid and structures, 11,111-134.

SELMANE , A. et LAKIS , A.A. (1997). Influence of Geometric Non-Linearities on the Vibration of Orthotropic Open Cylindrical Shells. International Journal for Numerical Methods in Engineering, 40,1115-1137.

SELMANE , A. et LAKIS , A.A. (1997). Non-Linear Dynamic Analysis of Orthotropic Open Cylindrical Shells Subjected to a Flowing Fluid. Journal of Sound and Vibration, 202(1), 67-93.

SHAMES , I.H. et DYM,C.L. (1985). Energy and Finite Element Methods in Structural Mechanics. McGraw-Hill.

SRINIVAS ,S. et RAO ,A.K. (1970). Bending ,Vibration and Buckling of Simply Supported Thick Orthotropic Rectangular Plates and Laminates. Int. J. Solid Struc. , 6 ,1463-1481.

STEIN, M. (1986). Non-Linear Theory for Plates and Shells Including the Effects of Transverse Shearing. AIAA J. ,24,1537-1544.

SURANA , K.S. (1983). Geometrically Non-Linear Formulation for Curved Shell Elements. IJNME, 19(4), 581-615.

SURANA , K.S. (1986). A Generalized Geometrically Non-Linear Formulation with Large Rotations for Finite Elements with Rotational Degrees of Freedom. Computers and Structures, 24(1), 47-55.

TIMARCI , T. et SOLDATOS , K.P. (1995). Comparative Dynamic Studies for Symmetric Cross-Ply Circular Cylindrical Shells on the Basis of A Unified Shear Deformable Shell Theory. J. of Sound and Vibration ,187(4), 609-624.

TINAWI , R. (1981). Introduction aux éléments finis. École Polytechnique de Montréal, EP-81-E-8.

TOURATIER, M. (1992). A Generalization of Shear Deformation Theories for Axisymmetric Multilayered Shells. Int. J. Solids Structures ,29(11) , 1379-1399.

VINSON , J .R. et SIERAKOWSKI , R.L. (1986). The Behaviour of Structures Composed of Composite Materials. M.Nijhoff.

VOYIADJIS , G.Z.et SHI , G. (1991). A Refined Two-Dimensional Theory for Thick Cylindrical Shells. Int. J. of Solids and Struct. ,27(3), 261-282.

WEAVER, D.S., et UNNY , T.E. (1973). On the Dynamic Stability of Fluid Conveying Pipes. J. of Applied Mechanics,ASME,40, 48-52.

WHITNEY , J.M. et LEISSA , A.W. (1969). Analysis of Heterogeneous Anisotropic Plates. J. of Applied Mechanics,36, 261-266.

WHITNEY, J.M. et PAGANO, N.J. (1970). Shear Deformation in Heterogeneous Plates. Journal of Applied Mech., 37, 1031-1036.

WHITNEY ,J.M. et SUN ,C.T. (1973). A Higher Order Theory for Extensional Motion of Laminated

Anisotropic Shells and Plates. Journal of Sound and Vibration,30, 85-97.

WHITNEY ,J.M. et SUN ,C.T. (1974). A Refined Theory for Laminated Anisotropic Cylindrical Shells. Journal of Applied Mechanics ,41, 47-53.

WIDERA , G.E.O et CHUNG , S.W.(1970). A Theory for Nonhomogeneous

Anisotropic Cylindrical Shells. Journal of Applied Mathematics and Physics ,21,378-399.

WU , W.H. et WITMER , E.A. (1974). The Dynamic Responses of Cylindrical Shells Including Geometric and Material Non-linearities. Int. J. Solids Structures,10, 243-260.

ZIENKIEWICZ , A.C. (1989). The Finite Element Method. McGraw-Hill.

ZUKAS ,J.A. et VINSON , J.R. (1971). Laminated Transversely Isotropic Cylindrical Shells. J.of Applied Mechanics, 38, 400-407.