Waste Management 221 (2026) 115624

Contents lists available at ScienceDirect

Waste Management

journal homepage: www.elsevier.com/locate/wasman

Research Paper

Can hydrothermal carbonization be used as a mean to increase the circularity of existing food waste anaerobic digestion plants?

Fabrice Tanguay-Rioux [a,*], Kassem Ibrahim Al Houssaini [b], Guillaume Majeau-Bettez [b], Robert Legros [b], Laurent Spreutels [a,b]

[a] Clean Energy Innovation Research Center, National Research Council Canada, 6100 av. Royalmount, Montréal, Québec H4P 2R2, Canada
[b] CIRAIG, École Polytechnique de Montréal, P.O. Box 6079, Montréal, Québec H3C 3A7, Canada

ARTICLE INFO

Keywords:
Anaerobic digestion
Hydrothermal carbonization
Substitution
Life cycle assessment
Digestate

ABSTRACT

Large-scale anaerobic digestion of food waste is often characterized by important material losses due to the pre-treatment steps required to remove impurities. Hydrothermal carbonization was used to increase the circularity of anaerobic digestion plants by converting the reject fractions, that would otherwise be discarded, into hydrochar and process water. The viability of this conversion was tested experimentally with samples collected from two commercial plants, and experimental results were used to verify the energetic performance of the process and realize a life-cycle assessment. While the hydrochar could be valorized as a fuel to replace coal, due to the high energy content (>20 MJ kg^{-1} for the light rejects) or as a soil amendment, the process water can be converted into additional methane. For every reject fraction considered, an increase in the methane potential of the process water was shown, when compared to the initial fraction, showing a solubilization of the organic materials. This high methane potential leads to an additional production of energy for anaerobic digestion facility. Overall, the conversion of the reject fractions by hydrothermal carbonization improves the environmental performance of anaerobic digestion plants for every scenario considered (1.2- to 1.6-fold reduction for climate change impact category), with the biggest gain when the hydrochar is used as a fuel to substitute coal.

1. Introduction

Anaerobic digestion (AD) is commonly seen as one of the most interesting processes for converting food waste (FW) into value-added products (Browne and Murphy, 2013; Chiu and Lo, 2016; Morales-Polo et al., 2018). During AD, FW is converted by microorganisms into biogas, which, once upgraded to methane, can be used as a low-carbon substitute for natural gas (Scarlat et al., 2018). In addition to biogas, AD leads to the production of digestate, which is mainly composed of partially degraded organic materials, inorganic materials, microorganisms and water (Dutta et al., 2021). Due to its relatively high concentration of macro- and micro-nutrients, digestate is commonly used as soil amendment to partially replace synthetic fertilizers (Duan et al., 2025; Dutta et al., 2021). However, source-separated FW is generally contaminated by important quantities of inorganic materials, which negatively affects the economics and the environmental impacts of the AD process (Le Pera et al., 2023). Since these inorganic materials are not biodegradable, they are directly transferred to the digestate, leading to an important contamination of this co-product, and reducing drastically its value (O'Connor et al., 2022). In order to limit this problem and ensure the production of a good quality digestate for effectively substituting synthetic fertilizers, AD of source-separated FW requires an important pre-treatment before the digestion process. This pre-treatment consists generally in a series of mechanical treatments, such as screening, sieving, shredding and pressing (Alessi et al., 2020; Bernstad et al., 2013). It reduces the size of the FW and separate inorganic materials, which decrease the contamination of the digestate and prevent system failures by removing impurities that could clog or break downstream equipment (Alessi et al., 2020; Bernstad et al., 2013; Jank et al., 2017).

Mechanical separation of waste, which is based on the differences in size, shape and density of the materials, is however never perfect (Tanguay-Rioux et al., 2021). In the case of AD, this sub-optimal operation means that even for well performing plants, small inorganic contaminants are not removed by the pre-treatment step and that a significant quantity of organic materials suitable for AD is incorrectly

* Corresponding author.
E-mail address: fabrice.tanguay-rioux@cnrc-nrc.gc.ca (F. Tanguay-Rioux).

https://doi.org/10.1016/j.wasman.2026.115624
Received 23 February 2026; Received in revised form 11 May 2026; Accepted 21 May 2026
Available online 30 May 2026
0956-053X/Crown Copyright © 2026 Published by Elsevier Ltd. This is an open access article under the CC BY license (http://creativecommons.org/licenses/by/4.0/).

sorted and is lost in the reject streams (Bernstad et al., 2013; Shi et al., 2024). This loss of organic materials is directly responsible for a cost increase of the AD plant, due to the rejected material that needs to be disposed of, for a reduction in methane production and for direct greenhouse gas emissions (Colazo et al., 2015; Le Pera et al., 2023; Shi et al., 2024). For wet AD, this loss of organic material can represent more than 15% of the theoretical methane production (Alessi et al., 2020; Colazo et al., 2015; Shi et al., 2024). It also represents an important cost since rejected materials can account for about 20% of the feedstock of an AD plant, particularly if it is processing commercial FW (Banks et al., 2018; Bernstad et al., 2013). In general, there is a trade-off between the removal of inorganic materials and the loss of organic materials (Alessi et al., 2020; Bernstad et al., 2013).

Hydrothermal carbonization (HTC) could be used to recover part of the organic materials lost in the reject streams by solubilizing them in an aqueous phase, called process water (PW), while the rest would be converted in a solid phase called hydrochar. Due to the relatively mild conditions of HTC, most inorganic materials such as glass, metals and plastics are not transformed during the process and are transferred directly to the hydrochar (Berge et al., 2011; Lin et al., 2017; Lu et al., 2012). The PW produced could be converted into additional methane by recirculating it in the digester. Several studies have previously demonstrated that PW produced from FW HTC can effectively be converted by AD (Ding et al., 2017; Lucian et al., 2020; Mannarino et al., 2022b; Rosas-Mendoza et al., 2024; Tanguay-Rioux et al., 2024; Tradler et al., 2018; Zhou et al., 2018). Therefore, HTC of the reject streams could in theory be used to recover the incorrectly sorted organic materials from the reject streams by solubilizing them in an aqueous phase that can be converted into methane. In addition, another strategy to increase the circularity of AD plants is to valorize the digestate by HTC. Digestate was shown to be a suitable feedstock for HTC as it can be converted into hydrochar without drying (Dutta et al., 2021). This could be particularly interesting for low-quality digestates. The PW produced by HTC could be converted in the same digesters as the FW. Previous studies have shown the benefit of co-conversion of PW and organic residues for methane production (Suárez et al., 2024; Villamil et al., 2020; Wang et al., 2020). More specifically for FW treatment, its co-digestion with PW was shown to lead to synergistic effects by enhancing bacteria diversity and methane production (Suárez et al., 2024). One advantage of co-digestion is the dilution of inhibitory compounds in the PW by the other substrate, thereby reducing their impact on the AD process (Suárez et al., 2024; Wang et al., 2020).

As for the hydrochar, depending on its quality, it could be used to substitute non-renewable products including fuels, fertilizers or cement additives (Khosravi et al., 2022; Ogunleye et al., 2024a). Hydrochar can enhance the physical properties of soil (*i.e.*, water-holding capacity and porosity), contribute to carbon sequestration and act as a slow release fertilizer (Islam et al., 2021; Khosravi et al., 2022). This utilization is however strongly dependent on the quality of the hydrochar produced and the feedstock used.

While the valorization of AD reject streams by HTC could be a promising strategy to reduce waste, increase methane production and diversify products, the actual benefits of this approach depend largely on the quality of the products and the additional energy required. Therefore, decision-making tools, such as life cycle assessment (LCA), are needed to ensure that this valorization strategy does not lead to greater environmental impacts than AD alone, while also taking into account how the resulting products are utilized. Several LCA studies have examined the combination of HTC and AD for organic waste treatment and generally report favorable outcomes for this integrated approach (Mannarino et al., 2022a; Mayer et al., 2021; Zhao et al., 2024). For example, Mannarino et al. (2022a) evaluated four HTC-based scenarios for sewage sludge valorization against a composting benchmark and found that the scenario combining HTC with AD achieved the best environmental performance in 11 out of 16 impact categories, with climate change impacts reduced by up to 98% relative to the benchmark. Mayer et al. (2021) also concluded that adding an HTC step to an AD facility treating food waste can be environmentally beneficial when powered by a low-carbon energy source, highlighting the importance of local conditions in determining the environmental viability of integrated HTC–AD systems. Zhao et al. (2024) further demonstrated that treating food waste digestate via HTC and applying the resulting hydrochar as a soil amendment can reduce the global warming potential of the system by more than a factor of three compared to standalone AD. Furthermore, Lombardi et al. (2023) showed that integrating anaerobic digestion significantly improves the overall environmental performance of HTC compared to alternative treatment options for process water such as conventional wastewater treatment or reverse osmosis, primarily due to energy recovery through biogas production. Despite these encouraging findings, an important gap remains. None of these studies explicitly account for the management and potential valorization of reject streams arising from commercial AD operations. Since such reject streams can substantially affect mass balances, energy recovery, and downstream environmental burdens, the conclusions of previous LCAs cannot be directly extrapolated to real industrial configurations without redefining system boundaries and updating the life cycle inventory.

The objective of this study is to assess the feasibility of using HTC to valorize the reject streams and the digestate of full-scale AD plants converting FW. HTC could play an important role by solubilizing organic compounds that can be recirculated to the AD process for enhanced methane production, and by producing hydrochar from a feedstock that would otherwise be discarded, thus reducing the environmental impacts of the facility. This feasibility assessment was done by considering three aspects, which are the technical feasibility, the energetic balance and the overall environmental impacts. To do so, two different AD plants processing source-separated FW in Canada were considered as potential examples for the implementation of this technological strategy. Samples were collected from these plants and converted at lab-scale. Then, the experimental results were used to carry out an LCA. This was done for the two examples of implementation and considering different substitution scenarios for the hydrochar.

2. Materials and methods

Samples collected from two different AD plants were converted by HTC. The products (PW and hydrochar) formed during that step were characterized and the biochemical methane potential (BMP) of the PWs was measured. An LCA was also carried out to verify if the conversion of these samples leads to additional energetic or environmental benefits for the AD plants.

2.1. Description of the AD systems and feedstocks

Samples from two different AD plants located in Canada were collected for analysis. Both plants were sampled at the beginning of the summer. In both cases, they receive a mix of source-separated FW and commercial FW. For both cases, approximately 10 kg of the FW, the light rejects (LR) fraction, the heavy rejects (HR) fraction, and the digestate (D) were provided by the operators. Upon reception, the samples were directly frozen. FW samples were collected to compare the characteristics of the products after HTC to the ones obtained for the reject streams and the digestate.

Both processes start with a size reduction of the FW received, followed by a separation of light and heavy inorganic materials, and the anaerobic digestion (AD). Finally, a rotative press is used to dewater the digestate. Following that last step, the solid digestate is used for soil amendment and the wastewater is sent to treatment. While both plants have a similar process, they have different pre-treatment equipment, they are operated at different temperatures and they have different sizes. AD plant 1 receives more than 100,000 tons yr^{-1}, while AD plant 2 has a capacity approximately 5 times smaller. The separation of light and heavy rejects is done in two steps in plant 1, but it is done in only one

step in plant 2. Process flow diagrams of both plants are presented in Fig. 1.

In addition to the process differences, the sampling strategies slightly differed for both plants since they were determined by the operators of both sites based on availabilities at the time. For AD plant 1, food waste (FW1) was sampled before the hammer mill, while for AD plant 2, food waste (FW2) was sampled after the hammer mill. Also, the digestate from AD plant 1 (D1) was sampled after the dewatering step, while the digestate from AD plant 2 (D2) was sampled before the dewatering step. Hence, D2 has a moisture content significantly higher than D1. Due to these differences, the results are not intended for direct comparison, but rather as two distinct examples of implementation.

Finally, the effect of the dewatering step on the HTC conversion of digestate was further assessed by centrifugating D2 at 10,000 rpm for 10 min, leading to the production of a liquid phase (D2L), corresponding to the supernatant, and a solid phase (D2S), corresponding to the pellet. Both were submitted to HTC.

2.2. Hydrothermal carbonization experiments

A total of 9 samples (*i.e.*, FW1, LR1, D1, FW2, LR2, HR2, D2, D2L, D2S) were submitted to HTC. HR1 was not used since it was composed mainly of large inorganic materials and was considered not suitable for HTC conversion.

Since it was shown in the literature that the energy yield of a HTC-AD combined process is higher for low HTC temperature (180–190 °C) (Lucian et al., 2020; Marin-Batista et al., 2020; Sangaré et al., 2024), a temperature of 180 °C was fixed for all the experiments in this study. Experiments were done in a 1.8 L Parr pressure vessel (Parr Instrument Company, USA), with a working volume of 1–1.5 L. The samples were diluted with deionized water to an initial solid content of 3–5%. Due to the presence of several contaminants in the reject fractions, a low solid content was chosen to ensure a good agitation in the vessel during lab-scale trials. Despite being relatively low for HTC conditions, this solid content should have a smaller effect than other operating parameters on full-scale performance since previous studies have showed that this parameter has a lower or insignificant impact on the hydrochar yield and quality when compared to temperature and residence time (Mäkelä et al., 2015; Periyavaram et al., 2023). Then, the reactor was flushed with N_2 to create anaerobic conditions. It was heated with an electric heating coil with an average heating rate of 5 °C min^{-1}. Once the temperature setpoint was reached, the temperature was maintained for 1 h and the reactor was then cooled with tap water with a cooling rate of 10 °C min^{-1}. During the duration of the experiment, the reactor was agitated at 250 rpm. Finally, the hydrochar and the PW were separated by filtration at 250 μm.

2.3. Biochemical methane potential tests

Biochemical methane potential (BMP) tests were done for the 9 PW samples obtained by HTC. In addition, BMP tests were done for 4 of the initial samples before HTC, corresponding to FW1, FW2, LR2 and HR2. These additional BMP tests were done to compare the potential methane production from the raw feedstock to the corresponding PW. BMP tests were not done directly on the digestate samples. Also, no BMP was done for LR1 since it was mainly composed of large plastic films and green residues.

The complete methodology used for the BMP tests is described in previous work (Tanguay-Rioux et al., 2024) and is based on the method described by Frigon et al. (2012). BMP tests were performed in 500 mL serum bottles (with 100 mL of liquid) that were prepared anaerobically in triplicates. The liquid contained 1 g of total volatile solids (TVS) for the feedstocks (samples collected from the AD plants) and 0.5 g of TVS for the PWs, granulated biomass with an inoculum to substrate ratio of 2:1 on a TVS basis (w/w), 2 mL of defined media, 4 mL of bicarbonate buffer, 0.5 mL of 1.25% Na_2S-cysteine solution and deionized water. The bottles were incubated at 35°C and were agitated at 125 rpm. The BMP tests were stopped when production of CH_4 became negligible (*i.e.*, < 2 mL d^{-1}). All methane production results are reported in standard conditions (1 atm, 0 °C) and the endogenous production was subtracted from the total methane production. The inoculum consisted of granular biomass collected from a full scale up-flow anaerobic sludge blanket

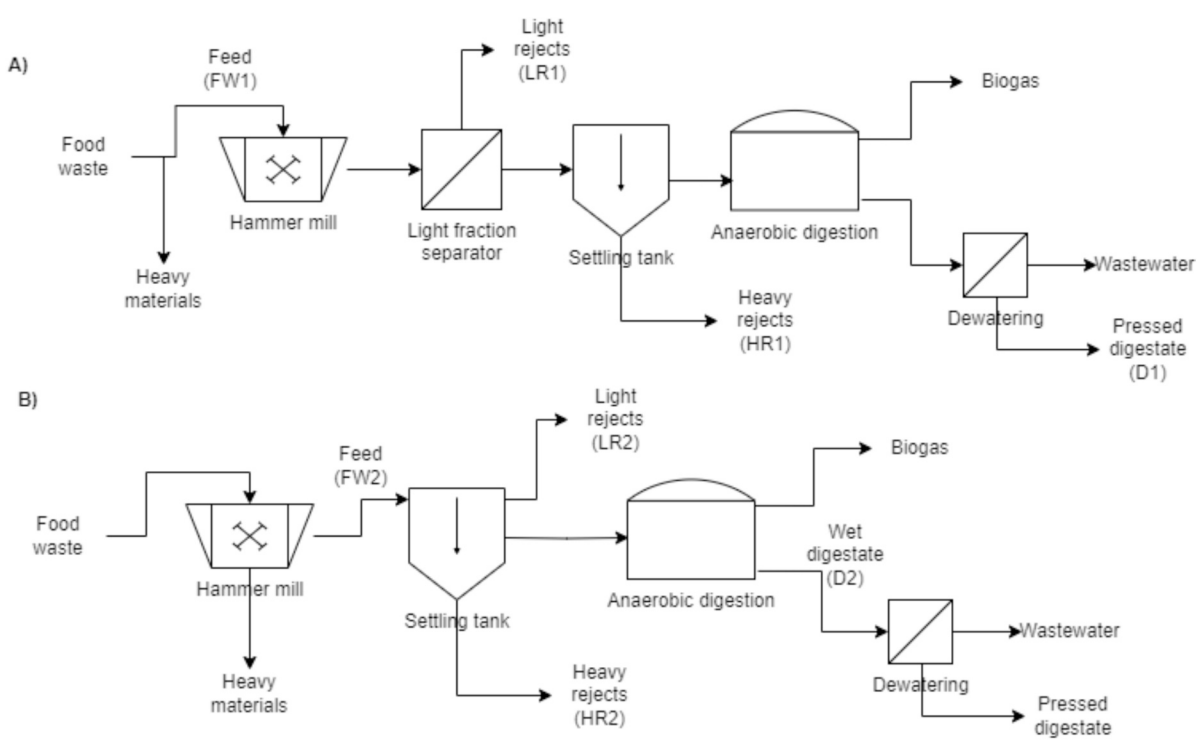

Fig. 1. AD process flow diagrams for A) AD plant 1 and B) AD plant 2. Hydrolysis was considered as a step of the AD and was not represented here. Sampling points are identified in parentheses for both plants.

(UASB) digester processing industrial wastewater.

BMP results are reported as the volume of CH_4 produced for 1 kg of TVS (BMP_{TVS}) for both the feedstocks and the PWs. However, it can be useful to also report the BMP for 1 kg of dry feedstock (BMP_f) to account for the global yield. The conversion was done with Eq. (1) for the raw feedstocks (FW1, FW2, LR1 and LR2) and with Eq. (2) for the PWs.

$$BMP_f = BMP_{TVS}\frac{TVS}{TS} \tag{1}$$

$$BMP_f = V_{CH_4}\frac{1}{V_{PW_a}}\frac{V_{PW_t}}{m_f} \tag{2}$$

where V_{CH_4} is the volume of CH_4 produced during the BMP test from the PW (L CH_4), V_{PW_a} is the volume of PW added to the BMP test (L), V_{PW_t} is the total volume of PW produced during the HTC (L) and m_f is the mass of feedstock on a dry basis added to the HTC (kg).

2.4. Analytical methods

Total solids (TS) and total volatile solids (TVS) content were measured according to standard methods (APHA, 2005). The ultimate analysis was done with an organic elemental analyzer vario EL cube (Elementar, Germany). The proximate analysis was done with a Thermogravimetric Analyzer (TGA Q5000, TA Instruments, USA), to measure the volatile matter (VM), the fixed carbon (FC) and the ash contents. The oxygen content in the solid samples was estimated as the difference between the VM and the CHNS content. The ultimate and proximate results are reported on a dry basis. Finally, the composition of the ash was measured with a benchtop sequential wavelength dispersive X-ray fluorescence (WDXRF) spectrometer (Supermini 200, Rigaku, Japan).

The chemical oxygen demand (COD) was measured using the standard dichromate method (Hach, 2007). The pH was measured using an Orion Star pH meter (Thermo Scientific, USA). Gluconic acid, lactic acid, formic acid, acetic acid and succinic acid were quantified by high-performance anion-exchange chromatography (HPAEC) using a Dionex Integrion HPIC instrument (Thermo Scientific, USA) with a Dionex™ IonPac™ AS19 column (2 mm × 250 mm × 5 μm) and a KOH gradient as mobile phase. Other volatile fatty acids (VFAs), including propionic acid, butyric acid, valeric acid and caproic acid were quantified by GC-FID using an Agilent 7890B gas chromatograph (Agilent Technologies, USA) equipped with a Nukol capillary column (30 m × 0.25 mm × 0.25 μm). Seven alcohols (MeOH, EtOH, n-PrOH, i-PrOH, n-BuOH, sec-BuOH, and t-BuOH) and acetone were measured by headspace GC-FID using an Agilent 6890 chromatograph equipped with a CombiPAL Autosampler (CTC Analytics, Switzerland) and an Agilent J&W DB-ACL2 capillary column (30 m × 530 mm × 2 μm) for separation.

The quantity of gas produced during the HTC was measured following the cooling phase using a drum-type gas meter (Ritter, Germany). The composition was also analyzed with a GC Agilent 7820A gas chromatograph (Agilent technologies, USA) equipped with a ShinCarbon ST micro-packed column (Restek Corporation, USA) coupled to a thermal conductivity detector.

2.5. Life cycle assessment

2.5.1. Goal and scope

This LCA evaluates the potential benefits arising from the integration of HTC and AD technologies, particularly for the valorization of reject streams and digestate from full-scale AD plants treating FW. It aims to identify key improvement pathways and major environmental hotspots, while ensuring that no major burden shifting occurs across impact categories, and hence support its technology deployment. The results are therefore intended primarily to inform AD process designers and technology developers in guiding strategic decision making.

The primary function of the system is the treatment of source-separated FW in Quebec, Canada. In addition, the system delivers secondary functions through the generation of energy and material co-products, notably heat from biogas combustion and hydrochar. Hence, the functional unit is quantified as "treat 1 kg of source-separated FW." The system boundaries encompass all processes from pre-treatment to final use of recovered products, while excluding upstream waste generation and collection. Simplified graphical representations of the product system boundaries are provided in Figs. S6 and S7 in the Supplementary Information.

In this study, multifunctionality was addressed through system expansion. This approach is recommended by ISO 14040 and 14044 when subdivision is not feasible, as is the case here due to the integrated nature of the process. It is also consistent with common practice in waste treatment LCAs, particularly when waste streams are valorized into higher value materials and energy products. For example, biogas energy recovery is commonly modeled as substituting fossil energy, either through electricity or heat generation, or via upgrading to biomethane that replaces natural gas (Alengebawy et al., 2022; Natividad Pérez-Camacho et al., 2019). Similarly, several studies have explored potential applications for hydrochar, such as its use as a solid fuel or soil amendment, with energy recovery representing roughly 80% of all hydrochar valorization pathways examined (Ogunleye et al., 2024b).

Primary data for the foreground system was drawn from the experiments and complemented with relevant literature sources, while background processes were modeled using Ecoinvent v3.10 with the cut-off system model. Attributional modelling was implemented using average data.

In total, seven HTC–AD scenarios were evaluated. These include two baseline AD scenarios based on FW1 and FW2, two scenarios for the valorization of light rejects based on LR1 and LR2, one scenario for heavy rejects based on HR2, and two scenarios for digestate valorization based on D1 and D2. For each scenario, three alternative end uses of the produced hydrochar were assessed: substitution of hard coal as a fuel (denoted as Fuel), substitution of synthetic NPK fertilizer (NPK), or a no substitution case in which hydrochar is disposed of and assumed to have no market value (Nosub). This results in 15 HTC–AD configurations and two baselines, for a total of 17 configurations analyzed. For example, the configuration in which digestate after dewatering undergoes HTC and the resulting hydrochar substitutes hard coal is denoted as "D1-HC-Fuel".

2.5.2. Life Cycle Inventory (LCI)

For the baseline AD systems (baseline-FW1 and baseline-FW2), it was assumed that 20% (0.2 kg per kg of input) of the material is removed as rejects, evenly split into light and heavy fractions, by the pre-treatment (Banks et al., 2018). These reject fractions are assumed to have the same composition as municipal solid waste (MSW) and are therefore sent for disposal in a sanitary MSW landfill in Quebec, Canada. For the AD stage, digester heating is assumed to be supplied by natural gas, consistent with current practice. The produced biogas is upgraded via pressure swing adsorption (PSA) to biomethane, which is subsequently combusted and substitutes natural-gas-based heat. The dewatered digestate by-product is applied to land, where it replaces synthetic nitrogen, phosphorus, and potassium fertilizers. Biogas and digestate yields are taken from a comparable installation reported by Banks et al. (2018), with 0.197 kg of biogas produced per kg of FW (equivalent to 465 m^3 CH_4 per tonne of volatile solids) and 0.34 kg of wet digestate generated per kg of FW. Digestate moisture content is assumed to be 85% after digestion, based on experimental results, and reduced to 70% after dewatering using a rotary press (Wellisch and Trépanier, 2024).

For the HTC-AD configurations, the feedstock fed to the HTC was assumed to have a moisture content of 80% (Lucian and Fiori, 2017). HTC treatment is done at 180 °C for 1 h. HTC heating was assumed to be powered by electricity, with the energy demand being 0.3 kWh per kg of

wet feed processed (Lucian and Fiori, 2017). The process water from HTC was recycled to AD to generate additional biogas. For scenarios where hydrochar substitutes a product, it was assumed to be dried to a moisture content of 10% before use, which is similar to previously reported values (Lucian and Fiori, 2017). The hydrochar drying energy requirement was estimated using the latent heat of vaporization of water with a drying efficiency of 70%, and was also assumed to be electricity-powered.

When hydrochar is used as fuel, a substitution factor is applied based on the ratio of its HHV to that of coal (27 MJ kg^{-1}). Combustion is modeled using a simplified process derived from the Ecoinvent hard coal combustion dataset, with emissions not applicable to hydrochar composition removed (e.g., radioactive substances and heavy metals). Fossil carbon emissions are also converted to biogenic. SO_2 emissions are calculated separately for each case based on the ultimate analysis of the hydrochars, assuming complete combustion.

When hydrochar substitutes synthetic fertilizers, its ultimate analysis is used to estimate the displaced mass of fossil-based N, P, and K fertilizers in Canada. This substitution includes production and delivery of fertilizers up to the farm gate. It assumes equivalent agronomic performance between nitrogen, phosphorus, and potassium supplied by hydrochar and those provided by synthetic fertilizers, with differences considered too small to significantly affect yield or nutrient runoff. In fact, a previous study showed that hydrochar can achieve comparable crop yield performance relative to synthetic fertilizers (Shrivastava and Laasri, 2025).

In the no-substitution scenario, hydrochar is not dried and is provided for land application, either in agricultural systems or in low-value uses (e.g., roadside soil amendment). In this context, hydrochar does not displace any conventional products, reflecting a situation where it has no effective market value. This includes cases where hydrochar quality is insufficient for agronomic use, as well as cases where it is applied on agricultural land but does not lead to a reduction of fertilizer use, as farmers do not adjust their fertilization practices. This scenario is conservative, as it does not account for the potential long-term carbon storage of hydrochar, which could act as a carbon sink (Luo et al., 2025).

2.5.3. Life Cycle Impact Assessment (LCIA)

This analysis covers all midpoint and endpoint indicators available in the Impact World+ (IW+) v2.1 method (Bulle et al., 2019). Modeling was conducted in OpenLCA 2.4.0, and the impact assessment was performed using both the midpoint and Expert versions of IW+.

3. Results

3.1. Characterization of the AD plants streams

Pictures of the 8 samples before treatment are provided in supplementary information (Figs. S1 and S2). The LR fractions from both plants had a similar appearance, consisting mainly of green residues, plastic films and other fibers. However, the granulometry differed as LR1 was mainly composed of large materials, while LR2 was composed of smaller and more homogeneous materials, reflecting the differences in the size reduction process. The HR fractions were visually different. HR1 was mainly composed of large pieces of bones, rocks, shells and metals, with little organic materials, while HR2, was composed of smaller materials that were trapped together, including organics and inorganics. This difference is due to differences in the pre-treatment and size reduction processes. As for the FW, FW2 was in a slurry form since it was collected after size reduction and dilution, while FW1 was made of bigger pieces since it was sampled before the size reduction step. Finally, as mentioned above, D2 was in a slurry form since it was collected before the dewatering step, while D1 was in a solid form since it was collected after. The main characteristics of the AD streams are presented in Table 1. HR1 was not characterized since it was mainly composed of large inorganic materials. Both the ultimate and the proximate analyses results strongly vary according to the stream and the plant, highlighting the differences between their respective operating conditions. Therefore, the HTC valorization of a given reject stream might be viable for a plant, but not for the other.

Despite being collected from two different plants, both FW1 and FW2 had comparable compositions, indicating that both AD plants are processing comparable feedstocks. FW2 however has a higher moisture content, since it was collected after dilution, as well as a higher C and N content. Both FW compositions also align to the compositions reported elsewhere (Browne and Murphy, 2013; Pecorini et al., 2020).

As for the LR fractions, LR1 had a significantly lower moisture content than LR2. Since HTC needs to be carried out in water to ensure the occurrence of hydrothermal reactions and a good mass and energy transfer (Heidari et al., 2019), LR1 would need to be diluted prior to HTC. Since AD plants produce a lot of wastewaters, dilution could be done with wastewater from the AD process, but the effect of this recirculation would need to be assessed. As for LR2, no or little dilution would be needed. In addition, LR1 has a lower VM content, but a higher FC and ash content. Plastic waste has a lower ash and FC content than food and wood wastes (Zhou et al., 2014), which might contribute to the difference observed. As for the HR fractions, HR2 had the highest ash content of all the AD streams, due to the presence of several small inorganic materials. In addition, its moisture content was too low for direct HTC and would thus need dilution, like LR1.

D1 and D2 also had very different compositions. D2 had a much higher carbon and VM content than D1, but also had a significantly lower ash content (2.6%) than D1 (20.7%). This higher carbon content combined to the lower ash content might indicate that D2 is a more suitable feedstock for HTC valorization. The notable difference observed could be attributed to D1 being dewatered, unlike D2. The dewatering step might have contributed to concentrating the ash in the solid fraction, leading to an overall lower concentration of volatiles. Despite these notable differences, the C, N, P and K contents measured in both digestates are in agreement with the ranges reported in the literature for FW digestate (O'Connor et al., 2022).The high ash content measured for some of the AD streams (*e.g.*, D1 and HR2), as well as the relatively low carbon content, might limit the utilization of the hydrochar produced. For example, high ash content in hydrochar can lead to fouling and corrosion of the combustion systems when used as a fuel (Benavente and Fullana, 2021). The high ash content in hydrochar therefore restricts the

Table 1
Results of the ultimate analysis, proximate analysis and XRF for the feedstocks and the reject streams of the 2 AD plants. Results of the proximate and ultimate analyses are provided on a dry basis. The K and P contents are provided as a percentage of the ash content.

		Proximate analysis (%)				Ultimate analysis (%)				Ash content (%)	
		Moisture	VM	FC	Ash	C	H	N	S	K	P
AD plant 1	FW1	81.1	80.8	8.8	3.7	41.1	6.0	1.8	0.0	4.0	4.2
	LR1	24.1	79.5	8.8	6.0	47.8	6.2	1.4	0.0	3.5	0.7
	D1	68.5	70.4	5.1	20.7	33.9	4.4	3.1	0.7	2.9	2.9
AD plant 2	FW2	87.8	84.1	6.9	2.6	44.7	6.8	3.3	0.5	3.7	7.0
	LR2	76.4	88.4	5.6	2.7	49.2	6.8	1.5	0.1	7.2	3.4
	HR2	46.8	65.7	1.6	31.1	20.3	3.0	1.9	0.2	1.0	2.6
	D2	85.1	87.0	5.8	2.6	45.8	6.9	3	0.5	4.0	5.5

possibility to fully replace coal, necessitating its use as a blend (Ro et al., 2019). Overall, the large differences in composition measured for the AD streams will lead to significant differences of the quality of the hydrochar and the PW produced, which can affect the potential of substitutions of these products.

3.2. Hydrothermal carbonization of the AD streams

3.2.1. Yields of the hydrothermal carbonization

Yields were calculated on a dry basis, and the liquid yield was calculated as the difference between the solid and gas yields (see Table 2). Overall, similar HTC yields were measured for the FW and the LR of both AD plants. Solid yields of 33.1% and 38.8% were obtained for FW1 and FW2, respectively, while solid yields of 55.0% and 56.2% were obtained for LR1 and LR2, respectively. However, larger differences were observed for the digestates, as solid yields of 62.6% and 44.5% were calculated for D1 and D2, respectively. This difference is due to the higher ash content of D1. Ashes are mostly inert under HTC conditions, leading to an increase of the solid yield for high ash concentrations (Lynam et al., 2015). HR2 had the highest solid yield of all feedstocks, followed by D1, both LRs, D2 and finally both FWs. While the higher solid yields obtained for HR2 and D1 are likely due to the presence of inorganic materials (higher ash content), the higher solid yields obtained for the LRs in comparison to the FWs are likely due to the presence of a higher concentration of plastic films and lignocellulosic biomass. It has been previously shown that plastics do not undergo chemical degradation under HTC conditions (Lin et al., 2017). As for lignocellulosic biomass, it only partly degrades under HTC at low temperature, leading to high solid yields. For example, Lynam et al. (2015) measured a solid yield above 80% for a temperature of 200 °C for different lignocellulosic biomass.

For all the feedstocks, a gas yield below 3% was calculated, which was expected due to the low temperature treatment. Therefore, the liquid yield varied from 33% to 61%.

3.2.2. Characterization of the hydrochar

Characteristics of the hydrochars are provided in Table 2. For all of them, the carbon content increased or remained the same in comparison to the corresponding initial feedstocks. This increase was limited, which was expected given the low temperature treatment. As mentioned previously, a low HTC severity was chosen to maximize energy recovery from the waste streams. Therefore, the hydrochar produced does not undergo a high carbonization. Still, the hydrochars derived from LR1 and LR2 each have a HHV exceeding 19 MJ kg^{-1}, making them suitable for energy valorization. This is especially true for HC-LR2 since a HHV of 26.4 MJ kg^{-1} was calculated. The presence of plastics and lignocellulosic biomass probably contributed to increasing the HHV of this fraction. A high HHV (*i.e.*, 20.7 MJ kg^{-1}) was also measured for HC-D2, which was significantly higher than HC-D1 (14.5 MJ kg^{-1}) and is in accordance with the higher carbon content measured for D2 compared to D1. Therefore, raw digestate seems to be a more suitable feedstock than dewatered digestate for HTC conversion. As for HC-HR2, a HHV of only 9.9 MJ kg^{-1} was calculated indicating that it would probably not be suitable for energy valorization. Overall, a low FC content was measured for all the hydrochars with a value smaller than 9%. FC content generally increases at higher HTC severity and varies significantly depending on the feedstocks (Wu et al., 2023).

Finally, the concentrations of nutrients, such as N, P and K were measured in all the hydrochars, resulting in concentrations in the range of 11–25 mg g^{-1}, 0.5–21 mg g^{-1} and 0.3–5.4 mg g^{-1} for N, P and K, respectively. Some of these nutrients could be added-value to soil if hydrochar is applied. However, to be used on soil, hydrochars derived from reject streams (LR or HR) would require the removal of the small inorganic contaminants prior to usage. Hence, hydrochars derived from digestate might represent a more promising feedstock for that application.

3.2.3. Characterization of the process water

The composition of the PWs varied significantly according to the AD streams (see Table 3). The COD varied from 13 to 28 g L^{-1}. In general, the COD increases with the LY. Therefore, a lower COD was obtained for the LR and HR streams than for the FW and the D streams, indicating that less methane could be recovered by the conversion of these PWs.

The main organic acids were quantified in all the PWs, including acetic acid (AA), formic acid (FA), lactic acid (LA), propionic acid (PA) and other larger organic acids, including butyric, valeric and caproic acids. Overall, organic acids accounted for 2 to 35% of the COD of the different PWs. For FW PWs, the main organic acids were lactic and acetic acids, which is similar to results reported by Tanguay-Rioux et al. (2024). As for the alcohols, the concentration remained low, and the main one detected being ethanol.

Almost no organic acids or alcohols were measured for PW-HR2 and PW-D1, which were also characterized by a higher pH. The organic acids accounted for only 2% and 4% of the COD for PW-HR2 and PW-D1, respectively, while it accounted for 32% and 35% for PW-D2 and PW-FW2, respectively. This large difference can have an important effect on the methane yield obtained from these PWs as organic acids are easily degraded during AD.

3.2.4. Characterization of the gas

For all the AD streams, the gaseous effluent of the HTC was composed almost exclusively of CO_2, with traces of H_2. No CO was detected.

3.3. Biochemical methane potential of the process waters

It has often been observed that BMP of HTC PW tend to decrease at higher temperature due to the formation of inhibiting and recalcitrant organic compounds (Lucian et al., 2020; Mannarino et al., 2022b; Posmanik et al., 2017; Tanguay-Rioux et al., 2024). For treatment at 180 °C or less, however, there is usually little inhibition occurring due to the smaller concentration of these organic compounds (Zhu et al., 2021). Therefore, since a temperature of 180 °C was used for the tests, high methane production is expected with little process inhibition. Results of the BMP obtained for all the feedstocks are presented in Fig. 2.

Table 2
Results of the solid yield (SY), liquid yield (LY), gas yield (GY) for the HTC conversion, the proximate analysis, the ultimate analysis and the XRF for hydrochars produced from the different feedstocks and reject streams of the 2 AD plants. Results of the proximate analysis, the ultimate analysis and the yields are provided on a dry basis. The K and P contents are provided as a percentage of the ash content.

		Yields (%)			Proximate analysis (%)				Ultimate analysis (%)				Ash content (%)		HHV (MJ kg^{-1})
		SY	LY	GY	Moisture	VM	FC	Ash	C	H	N	S	K	P	-
AD plant 1	HC-FW1	33.1	64.3	2.6	85.1	89.6	4.9	1.0	48.8	6.9	1.7	0.12	3.3	4.2	20.0
	HC-LR1	55.0	42.8	2.2	79.2	83.2	2.2	11.4	47.0	6.0	1.6	0.04	1.3	8.6	19.6
	HC-D1	62.6	34.5	2.9	80.4	59.6	5.5	31.4	33.1	4.3	2.1	0.32	1.7	3.1	14.5
AD plant 2	HC-FW2	38.8	60.8	0.4	82.2	85.6	8.7	3.2	43.2	6.0	2.5	0.54	1.8	7.3	17.7
	HC-LR2	56.2	42.3	1.5	76.2	92.0	4.7	1.2	63.7	7.8	1.1	0.0	3.0	5.2	26.4
	HC-HR2	65.0	33.2	1.8	60.6	70.9	2.6	24.6	23.1	3.2	1.1	0.0	0.2	8.8	9.9
	HC-D2	44.5	52.9	2.6	78.6	88.4	4.9	3.2	50.3	7.1	1.9	0.49	1.9	6.5	20.7

Table 3
Characteristics of the process waters produced from the different feedstocks and reject streams of the 2 AD plants.

		COD (g L^{-1})	Organic acids (g L^{-1})						Alcohols (g L^{-1})		pH
			AA	FA	LA	PA	Other acids	COD equivalent	EtOH	Other alcohols	
AD plant 1	PW-FW1	27.6	0.6	0.4	2.0	0.0	0.0	3.4	0.9	0.1	4.8
	PW-LR1	17.9	0.7	0.3	0.5	0.1	0.1	1.9	0.0	0.1	4.8
	PW-D1	21.6	0.3	0.2	0.2	0.0	0.0	0.9	0.0	0.0	6.7
AD plant 2	PW-FW2	26.8	2.1	0.5	0.2	1.1	2.5	9.3	0.4	0.1	5.3
	PW-LR2	13.1	1.0	0.3	0.6	0.2	0.3	2.8	0.2	0.1	4.6
	PW-HR2	16.4	0.2	0.1	0.1	0.0	0.0	0.4	0.0	0.0	6.5
	PW-D2	25.4	2.8	0.6	3.2	0.4	0.5	8.2	0.7	0.1	5.0

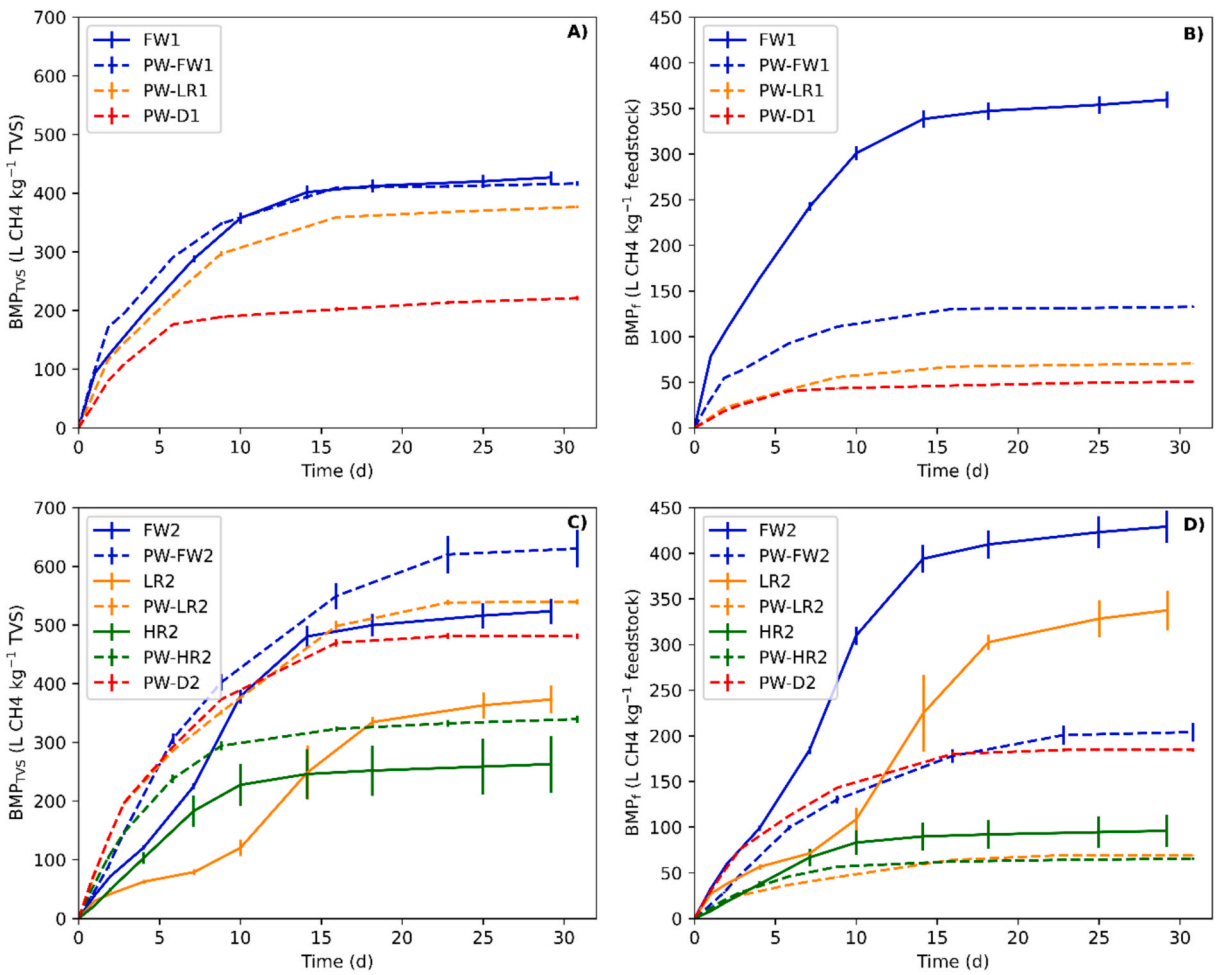

Fig. 2. Results of the BMP tests for all the AD streams including the PWs and the feedstocks on a TVS basis and on a dry feedstock basis. Results for plant 1 on a TVS basis (A) and dry feedstock basis (B), and for plant 2 on a TVS basis (C) and dry feedstock basis (D), are presented. Standard deviations are represented as vertical bars.

BMPs of 426 and 523 L CH_4 kg^{-1} TVS were obtained for FW1 and FW2, respectively, which is in agreement with results reported elsewhere (Banks et al., 2018; Browne and Murphy, 2013). On a TVS basis, the BMP of FW1 was similar to the corresponding PW, while for the 3 other streams for which the comparison was done, a higher methane production was obtained for the PW than for initial feedstock. An increase of the methane yield of the PW compared to that of the initial feedstock of 17%, 31% and 23% was obtained for FW2, LR2 and HR2, respectively. The conversion seems particularly interesting for the LR1 fraction as the HTC increases both the total CH_4 produced and the conversion rate. This increase of the conversion rate is probably due to a partial degradation of the lignocellulosic biomass present in the LR fractions. Overall, the LR PWs (PW-LR1 and PW-LR2) have similar methane yields to those of their corresponding PWs produced from FW within the same plant, showing promising results for AD. As for PW-HR2, despite having a much lower BMP than PW-LR2 and PW-LR1, 340 L CH_4 kg^{-1} TVS was still obtained, which is significative considering that this fraction was initially highly contaminated.

Overall, PW-FW2 and PW-D2 were shown to have the highest methane yields of all the PW, while also having the highest fractions of organic acids (32% and 34% of the COD). On the other hand, PW-D1 and PW-HR2 were shown to both have the lowest fractions of organic acids (2% and 4% of the COD) in the PW and have the lowest methane yields. Therefore, the concentration of organic acids is an important indicator to predict the methane yield of different PW.

While PW-D2 produced an important quantity of CH_4, it was noted that PW-D1 had a much lower methane yield, despite both being produced from digestates. Therefore, the dewatering of the digestate seems

to strongly decrease the methane yield of the corresponding PW. A similar observation was previously made for mechanically separated FW, where the removal of the aqueous phase strongly decreased the BMP of the PW (Tanguay-Rioux et al., 2024). To further investigate the effect of the mechanical separation of the digestate on the BMP of the resulting PW, D2 was separated in two phases by centrifugation, that were each submitted to HTC and AD. Results showed that the PW produced from the liquid phase of digestate (D2L) had a 27% higher BMP than the PW produced from the solid phase (D2S). Specifically, BMP values of 498.6 ± 11.5 and 364.2 ± 9.6 mL CH4 g^{-1} TVS were obtained for the liquid and solid phases, respectively. This confirms that removing part of the liquid fraction from the digestate before HTC would considerably reduce CH_4 recovery.

Despite the overall good methane production that was achieved from the reject fractions and the digestates, the global yield also needs to be considered. As seen in Fig. 2, the PW produces much less methane than the original feedstock when compared on the same basis (initial dry feedstock). This was expected as an important fraction of the organic compounds is transferred in the solid fraction (*i.e.*, hydrochar). Still, 65–70 L CH_4 kg^{-1} dry feedstock could be recovered from the LR and HR fractions, which can represent a significative quantity for some AD plants. As for the digestates, 51 and 184 L CH_4 kg^{-1} dry feedstock were obtained for D1 and D2, respectively. This represents an interesting production for streams that would otherwise be discarded. Moreover, this additional methane production from LR and HR streams can be achieved without compromising the quality of the digestate. For a plant processing 100 000 tons yr^{-1} of FW and 10% of light and heavy rejects, the valorization of the reject streams (LR or HR) could produce 175,000–500,000 m^3 of CH_4 per year depending on the reject stream, which could represent a significative amount if both the net energy balance and the overall environmental gains are positive.

When D2 is separated in a solid and a liquid fraction by centrifugation, the methane production led to a methane yield of 72 and 587 L CH_4 kg^{-1} TVS for PW-D2S and PW-D2L, respectively. Therefore, the vast majority of the CH_4 produced from the digestate comes from the soluble compounds, which also explains the low recovery from D1. However, following the centrifugation, a moisture content of 79.8% and 98.4% were measured for D2S and D2L, respectively. Therefore, due to the very high moisture of the wastewater separated from digestate, it would be energy intensive to proceed to the HTC of D2L alone. However, this fraction could probably be used to dilute a dryer feedstock, such as the LR or HR streams, while also contributing to wastewater treatment and producing more CH_4 for the process. The dilution of reject streams with digestate wastewater was however not tested and would need to be further investigated.

Although samples from the AD plants were collected only once and may not fully represent the average annual composition, they still offer an overview of the composition at a specific point in time for two different plants. While yields and BMPs obtained from a given reject stream may fluctuate throughout the year, the results obtained provide a range of values that can be expected. Despite potential variability, these data provide a solid basis for assessing performance in terms of LCA. Future studies should aim to repeat the sampling at multiple times during the year and with larger sample sizes to better capture seasonal and operational variations.

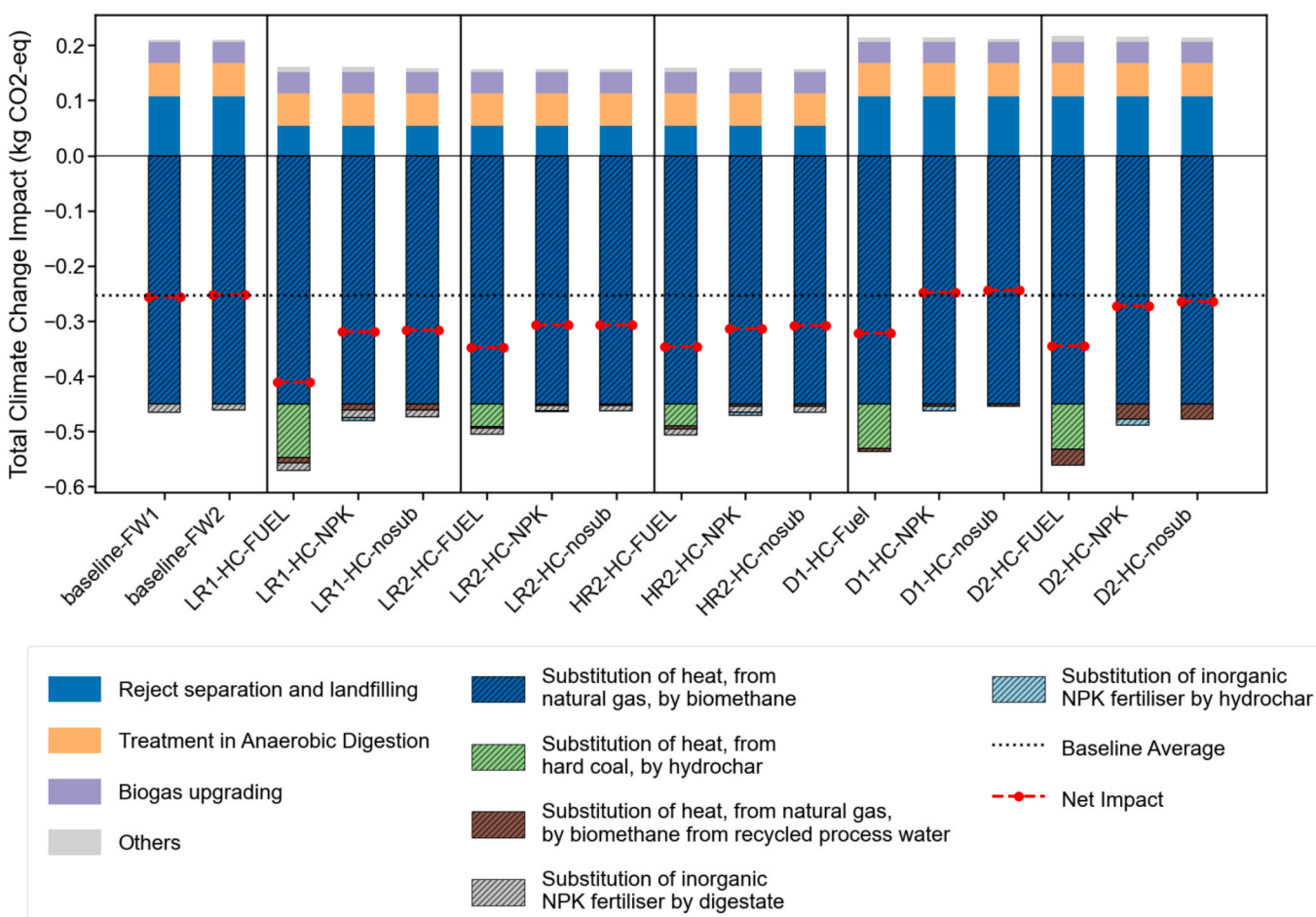

Fig. 3. LCA results on the Climate Change (CC) impact category for the 17 process configurations (LR1: Light rejects 1, LR2: Light rejects 2, HR2: Heavy rejects 2, D1: Digestate 1, D2: Digestate 2).

3.4. LCA results

To assess the potential environmental benefits of converting reject streams and digestate from a commercial AD plant through HTC, an LCA was performed. Results for the Climate Change (CC) impact category across the 17 configurations are shown in Fig. 3. The endpoint-level damages are provided in the Supplementary Information (Ecosystem Quality, Fig. S8; Human Health, Fig. S9).

Both baseline scenarios show similar impacts of approximately –0.25 kg CO_2-eq per FU, which is in accordance with results reported in literature for the AD of FW (Moult et al., 2018; Tian et al., 2021). The main contributors to CC impacts in the baselines are the pre-treatment in the settling tank, due to the significant non-fossil methane emissions from landfill disposal of rejects, followed by AD heating by natural gas, and non-fossil methane emissions from biogas upgrading. All other processes contributing less than 15% of the total positive impacts are grouped under "Others" for simplicity, including pre-treatment in hammer mill, digestate dewatering, HTC heating and hydrochar drying. Regarding substitution effects in the baseline scenarios, the most significant benefit comes from the substitution of natural gas with biomethane. Digestate-fertilizer substitution yields a smaller benefit, particularly for phosphorus and potassium, which are less abundant in the digestates compared to nitrogen.

All the valorization pathways converting reject streams (LR1, LR2, HR2) through HTC outperform the baselines, for all substitution alternatives, with CC impacts ranging between –0.3 and –0.41 kg CO_2-eq, representing a 1.2- to 1.6-fold reduction. This improvement is primarily driven by the halved share of rejects sent to landfill and, in configurations where hydrochar substitutes hard coal, by the resulting displacement of coal-based heat. This is particularly evident for LR1, where the LR1-HC-Fuel pathway delivers the best climate change performance. Although the hydrochar from LR1 has a lower HHV (19.6 MJ $kg^{-}1$) than that from LR2 (26.4 MJ kg^{-1}), LR1's lower initial moisture content meant that more water had to be added to reach the 80% moisture required for HTC. This higher slurry mass, combined with a relatively high solid yield, resulted in a greater quantity of hydrochar overall, which allowed more displacement of coal-based heat. Nonetheless, although HR2 also has a relatively low moisture content (46%), its resultant hydrochar has a low substitution factor due to its low HHV (9.9 MJ kg^{-1}), reducing its benefit in replacing hard coal. Overall, valorizing the rejects consistently leads to improved climate change performance compared to the baseline scenarios, with the most favorable outcome achieved when the resulting hydrochar substitutes hard coal. This is in accordance with previous findings (Mannarino et al., 2022a; Mohammadi et al., 2020; Ogunleye et al., 2024b).

When it comes to digestate valorization pathways (D1 and D2), their climate change performances are nearly indistinguishable to that of the baselines except when hydrochar heat is substituting hard coal heat. Hence, for digestate valorization pathways, the substitution nature and potential of the resulting hydrochar is critical. Moreover, D2 valorization performs slightly better than D1, primarily because it was not dewatered prior to the HTC step. As a result, its biodegradable content was higher, as reflected by its higher BMP, which in turn led to greater benefits from increased biogas production. Among the pathways considered (rejects and digestates), the D2 valorization routes are the only ones in which recycling process water for additional biogas production resulted in a notable reduction in overall climate change impacts. This further highlight that, across most HTC–AD configurations, improvements in climate change performance are not primarily driven by the additional biomethane generated through process water recycling. Rather, they are largely attributable to the substitution effect associated with the hydrochar, particularly its energy quality and corresponding displacement potential.

The results indicate that the integrated HTC-AD configurations are beneficial in terms of CC impacts. However, focusing exclusively on this category can be misleading, as displacement of impact may occur. To verify whether burden shifting occurs, ecosystem quality (EQ) and human health (HH) endpoint damages were assessed (Fig. S8 and Fig. S9). No significant shifts were observed, as reductions in climate change impacts were not offset by increases in EQ or HH damages across the evaluated configurations (see Supplementary information). A sensitivity analysis on the climate change (CC) impact was conducted by substituting the Quebec electricity mix with that of Ontario, Canada, since several processes in the system (HTC, hydrochar drying, and PSA etc.) rely on electricity and may therefore influence the results (Fig. S10). The Ontario electricity grid has a higher share of fossil-based generation compared to Quebec's predominantly hydropower supply and therefore represents a more carbon-intensive context. A sensitivity analysis was also performed on the HTC solid loading, evaluating values of 75% and 70% relative to the baseline of 80%, as this parameter can alter mass balances and consequently affect the results (Fig. S11). Despite these differences, the results of the LCA remained largely unchanged. This outcome reinforces the robustness of the conclusions on the climate change impacts of the HTC-AD configurations.

4. Discussion

Overall, the conversion of the light reject fractions from both AD plants was shown to be viable by HTC for one sample collected during the summer. While this was also possible for the heavy reject fraction of one of the AD plants, it was deemed not possible for the other one due to the presence of large inorganic objects. For these three cases, a significant fraction of methane was produced from the AD of the PW produced during HTC, leading to an additional energy production from materials that would otherwise be discarded in a landfill. A similar conclusion was also drawn from the digestate samples, with a particularly good energy recovery for raw digestate. These results provide a first feasibility demonstration for one point in time for two different facilities. However, due to the large heterogeneity of food waste and its seasonal variability, further work should assess how this variability affects the technical feasibility. Results from previous studies indicate that food waste composition, together with temperature, is a key factor determining the composition of the resulting PW and the BMP (Tanguay-Rioux and Spreutels, 2026).

In addition, further studies should also focus on optimizing the operating conditions specifically for a given reject stream. While low severity maximizes the energy yield, higher severity could be selected to increase the hydrochar quality if it is deemed insufficient for energy valorization. For example, the HHV of the hydrochars produced from the heavy reject and the digestate from plant 1 are lower than from the ones obtained from the other streams. Therefore, increasing severity specifically for these streams could help increase the product quality, but would lead to a decrease in global energy yield.

For soil application, the main challenge associated with hydrochar quality is contamination by inorganic materials such as small plastic, metal, and glass fragments. Therefore, a pre-screening step would likely be necessary to remove these impurities before land application. This is particularly important for the heavy reject fraction, which showed an ash content of 25%. However, given the significant difference observed in the light reject fraction between the two plants (1.2% and 11.4%), it is also likely that the ash content will fluctuate over time and occasionally reach high levels, indicating the need for a screening stage for hydrochar produced from this stream. Large-scale optimization and characterization would be needed to identify a suitable screening process and to assess the extent of hydrochar contamination by small inorganic particles.

From an LCA perspective, similar conclusions were drawn for both AD plants, despite their differences. The LCA demonstrated that valorizing the reject streams through HTC can generate environmental benefits, particularly when hydrochar-derived heat displaces heat production from hard coal. In addition, although the gains are smaller than those achieved for the reject streams, converting the digestate via HTC

can still result in modest improvements or, at minimum, negligible additional impacts. The sensitivity analyses on both the electricity mix and the solid load confirm that the conclusions are robust and remain unchanged when these factors are varied.

Nevertheless, even in cases where hydrochar is not suitable for fuel substitution and the overall climate change impact remains close to the baseline, the HTC–AD coupling may still be justified due to additional benefits, including the economic value associated with extra methane production (Ipiales et al., 2021), and the reduction of landfilling. In addition, for all the scenarios considered, an energy balance realized (section S4 in supplementary information) demonstrated that the additional methane produced from the residual fractions (LR, HR or D) leads to a higher energy generation than the energy consumed by the additional HTC step. All the scenarios considered are therefore net energy positive and can contribute to an increase of the anaerobic digestion plant overall energy balance. Furthermore, other potential benefits of hydrochar, such as the value of its carbon content for agricultural applications, were not considered in this LCA because of limited available data. These aspects could further support the implementation of integrated HTC–AD pathways compared with standalone AD systems.

Another limitation of this study is that the results are strongly dependent on feedstock quality. In practice, different AD plants treating different FW streams in various geographical contexts may produce products with distinct characteristics. As shown in this work, hydrochar quality is a critical parameter influencing LCA outcomes. Therefore, further process parametrization is required to account for variations in material quality and operational conditions, such as HTC temperature and residence time. This would enable the development of more generalized and flexible LCAs capable of identifying environmental gains beyond a single plant configuration.

Despite these limitations, results indicate that HTC–AD configurations can provide greater environmental benefits than standalone AD systems. Furthermore, we recommend AD plant operators to prioritize the valorization of reject streams and to maximize the energy utilization of hydrochar as they appear to be key strategies that offer the most significant environmental advantages.

5. Conclusion

The HTC of residual streams from 2 different AD plants located in Canada was performed in order to increase their circularity by increasing waste conversion. These residual streams, including the light reject and the heavy reject fractions of the plant, as well as the digestate, can be converted in hydrochar and PW. While hydrochar may be valorized as a fuel or as a soil amendment, the PW can be converted into additional methane by AD. The PW produced from all the residual streams had a higher methane potential than the raw feedstock, showing that the HTC can adequately solubilize a fraction of the residual organic compounds for additional methane production. Also, a high energy content was obtained for the hydrochars produced from the light reject fractions of the plants and the raw digestate with HHV of 20 MJ kg^{-1} or higher, making them suitable feedstocks for energy valorization. On the other hand, a low HHV was measured for the hydrochars obtained from the heavy reject fractions, indicating that other valorization pathways should be considered. However, even if the hydrochar is not valorized due to a poor quality, results show that the conversion of the PW alone, which also leads to a reduction of the landfilling of reject materials, can lead to additional energy production of the AD plant and lower environmental impacts. Still, the biggest environmental gains are achieved when hydrochar is used to substitute coal especially when derived from light reject streams.

For the HTC of digestate, a higher energy production can be achieved with raw digestate rather than dewatered digestate, due to a higher methane production from the PW and a higher HHV of the hydrochar. Results indicate that HTC of the liquid fraction of digestate lead to a PW with a high methane potential. This wastewater could thus be used to dilute reject streams having a too low moisture content, while also contributing to the production of additional energy in AD. Overall, the conversion of reject streams and digestate from AD plants could represent an interesting strategy to increase the circularity of such plants, by reducing the environmental impacts, increasing the global energy production and reducing costs associated with waste disposal.

CRediT authorship contribution statement

Fabrice Tanguay-Rioux: Writing – original draft, Methodology, Formal analysis, Data curation, Conceptualization. **Kassem Ibrahim Al Houssaini:** Writing – original draft, Methodology, Formal analysis. **Guillaume Majeau-Bettez:** Writing – review & editing, Validation, Supervision, Methodology. **Robert Legros:** Writing – review & editing, Validation, Supervision. **Laurent Spreutels:** Writing – review & editing, Validation, Supervision, Methodology, Conceptualization.

Declaration of competing interest

The authors declare that they have no known competing financial interests or personal relationships that could have appeared to influence the work reported in this paper.

Acknowledgements

The authors wish to thank the Société d'Économie Mixte de l'Est de la Couronne Sud (SÉMECS) for providing samples and Emmanuel Galiwango for his contribution to the proximate and ultimate analysis.

Funding

The research leading to these results was funded by the Government of Canada through the National Research Council's Advance Clean Energy Program (ACE) and the Program of Energy Research and Development (PERD).

Appendix A. Supplementary data

Supplementary data to this article can be found online at https://doi.org/10.1016/j.wasman.2026.115624.

Data availability

All data supporting the findings of this study are included in the manuscript and its supplementary information files.

References

Alengebawy, A., Mohamed, B.A., Ghimire, N., Jin, K., Liu, T., Samer, M., Ai, P., 2022. Understanding the environmental impacts of biogas utilization for energy production through life cycle assessment: an action towards reducing emissions. Environ. Res. 213, 113632. https://doi.org/10.1016/j.envres.2022.113632.

Alessi, A., Lopes, A., do C.P., Müller, W., Gerke, F., Robra, S., Bockreis, A., 2020. Mechanical separation of impurities in biowaste: Comparison of four different pretreatment systems. Waste Manag. 106, 12–20. https://doi.org/10.1016/j.wasman.2020.03.006.

APHA, 2005. Standard Methods for the Examination of Water and Wastewater. American Public Health Association, Washingthon, D.C.

Banks, C.J., Heaven, S., Zhang, Y., Baier, U., 2018. Food waste digestion: Anaerobic Digestion of Food Waste for a Circular Economy. (No. IEA Bioenergy Task 37, 2018: 12), ISBN: 978-1-910154-58-8 (eBook electronic edition), 978-1-910154-57-1 (printed paper edition). IEA Bioenergy.

Benavente, V., Fullana, A., 2021. Low-cost additives to improve the fusion behaviour of hydrochar ash. Fuel 285, 119009. https://doi.org/10.1016/j.fuel.2020.119009.

Berge, N.D., Ro, K.S., Mao, J., Flora, J.R.V., Chappell, M.A., Bae, S., 2011. Hydrothermal carbonization of municipal waste streams. Environ. Sci. Technol. 45, 5696–5703. https://doi.org/10.1021/es2004528.

Bernstad, A., Malmquist, L., Truedsson, C., la Cour Jansen, J., 2013. Need for improvements in physical pretreatment of source-separated household food waste. Waste Manag., Special Thematic Issue: Urban Mining 33, 746–754. https://doi.org/10.1016/j.wasman.2012.06.012.

Browne, J.D., Murphy, J.D., 2013. Assessment of the resource associated with biomethane from food waste. Appl. Energy 104, 170–177. https://doi.org/10.1016/j.apenergy.2012.11.017.

Bulle, C., Margni, M., Patouillard, L., Boulay, A.-M., Bourgault, G., De Bruille, V., Cao, V., Hauschild, M., Henderson, A., Humbert, S., Kashef-Haghighi, S., Kounina, A., Laurent, A., Levasseur, A., Liard, G., Rosenbaum, R.K., Roy, P.-O., Shaked, S., Fantke, P., Jolliet, O., 2019. IMPACT World+: a globally regionalized life cycle impact assessment method. Int. J. Life Cycle Assess. 24, 1653–1674. https://doi.org/10.1007/s11367-019-01583-0.

Chiu, S.L.H., Lo, I.M.C., 2016. Reviewing the anaerobic digestion and co-digestion process of food waste from the perspectives on biogas production performance and environmental impacts. Environ. Sci. Pollut. Res. 23, 24435–24450. https://doi.org/10.1007/s11356-016-7159-2.

Colazo, A.-B., Sánchez, A., Font, X., Colón, J., 2015. Environmental impact of rejected materials generated in organic fraction of municipal solid waste anaerobic digestion plants: comparison of wet and dry process layout. Waste Manag. 43, 84–97. https://doi.org/10.1016/j.wasman.2015.06.028.

Ding, L., Cheng, J., Qiao, D., Yue, L., Li, Y.-Y., Zhou, J., Cen, K., 2017. Investigating hydrothermal pretreatment of food waste for two-stage fermentative hydrogen and methane co-production. Bioresour. Technol. 241, 491–499. https://doi.org/10.1016/j.biortech.2017.05.114.

Duan, Y., Wang, Z., Ganeshan, P., Sar, T., Xu, S., Rajendran, K., Sindhu, R., Binod, P., Pandey, A., Zhang, Z., Taherzadeh, M.J., Awasthi, M.K., 2025. Anaerobic digestion in global bio-energy production for sustainable bioeconomy: potential and research challenges. Renew. Sustain. Energy Rev. 208, 114985. https://doi.org/10.1016/j.rser.2024.114985.

Dutta, S., He, M., Xiong, X., Tsang, D.C.W., 2021. Sustainable management and recycling of food waste anaerobic digestate: a review. Bioresour. Technol. 341, 125915. https://doi.org/10.1016/j.biortech.2021.125915.

Frigon, J.-C., Mehta, P., Guiot, S.R., 2012. Impact of mechanical, chemical and enzymatic pre-treatments on the methane yield from the anaerobic digestion of switchgrass. Biomass Bioenergy 36, 1–11. https://doi.org/10.1016/j.biombioe.2011.02.013.

Hach, 2007. Method 8000: Oxygen Demand, Chemical Using Reactor Digestion Method (No. DOC316.53.01099).

Heidari, M., Dutta, A., Acharya, B., Mahmud, S., 2019. A review of the current knowledge and challenges of hydrothermal carbonization for biomass conversion. J. Energy Inst. 92, 1779–1799. https://doi.org/10.1016/j.joei.2018.12.003.

Ipiales, R.P., de la Rubia, M.A., Diaz, E., Mohedano, A.F., Rodriguez, J.J., 2021. Integration of hydrothermal carbonization and anaerobic digestion for energy recovery of biomass waste: an overview. Energy Fuels 35, 17032–17050. https://doi.org/10.1021/acs.energyfuels.1c01681.

Islam, Md. Azharul, Limon, Md.S.H., Romić, M., Islam, Md. Atikul, 2021. Hydrochar-based soil amendments for agriculture: a review of recent progress. Arab. J. Geosci. 14, 102. Doi: 10.1007/s12517-020-06358-8.

Jank, A., Müller, W., Waldhuber, S., Gerke, F., Ebner, C., Bockreis, A., 2017. Hydrocyclones for the separation of impurities in pretreated biowaste. Waste Manag. 64, 12–19. https://doi.org/10.1016/j.wasman.2017.03.001.

Khosravi, A., Zheng, H., Liu, Q., Hashemi, M., Tang, Y., Xing, B., 2022. Production and characterization of hydrochars and their application in soil improvement and environmental remediation. Chem. Eng. J. 430, 133142. https://doi.org/10.1016/j.cej.2021.133142.

Le Pera, A., Sellaro, M., Sicilia, F., Ciccoli, R., Sceberras, B., Freda, C., Fanelli, E., Cornacchia, G., 2023. Environmental and economic impacts of improper materials in the recycling of separated collected food waste through anaerobic digestion and composting. Sci. Total Environ. 880, 163240. https://doi.org/10.1016/j.scitotenv.2023.163240.

Lin, Y., Ma, X., Peng, X., Yu, Z., 2017. Hydrothermal carbonization of typical components of municipal solid waste for deriving hydrochars and their combustion behavior. Bioresour. Technol. 243, 539–547. https://doi.org/10.1016/j.biortech.2017.06.117.

Lombardi, L., Tuci, F., Śliz, M., Czerwińska, K., Fabrizi, S., Wilk, M., 2023. Life cycle assessment of the hydrothermal carbonization process applied to the wet fraction mechanically separated from municipal mixed waste. Waste Manag. 166, 181–193. https://doi.org/10.1016/j.wasman.2023.04.043.

Lu, X., Jordan, B., Berge, N.D., 2012. Thermal conversion of municipal solid waste via hydrothermal carbonization: comparison of carbonization products to products from current waste management techniques. Waste Manag. 32, 1353–1365. https://doi.org/10.1016/j.wasman.2012.02.012.

Lucian, M., Fiori, L., 2017. Hydrothermal carbonization of waste biomass: process design, modeling, energy efficiency and cost analysis. Energies 10, 211. https://doi.org/10.3390/en10020211.

Lucian, M., Volpe, M., Merzari, F., Wüst, D., Kruse, A., Andreottola, G., Fiori, L., 2020. Hydrothermal carbonization coupled with anaerobic digestion for the valorization of the organic fraction of municipal solid waste. Bioresour. Technol. 314, 123734. https://doi.org/10.1016/j.biortech.2020.123734.

Luo, X., Pei, X., Zhang, X., Du, H., Ju, L., Li, S., Chen, L., Zhang, J., 2025. Advancing hydrothermal carbonization: assessing hydrochar's role and challenges in carbon sequestration. Environ. Res. 270, 121023. https://doi.org/10.1016/j.envres.2025.121023.

Lynam, J.G., Reza, M.T., Yan, W., Vásquez, V.R., Coronella, C.J., 2015. Hydrothermal carbonization of various lignocellulosic biomass. Biomass Convers. Biorefinery 5, 173–181. https://doi.org/10.1007/s13399-014-0137-3.

Mäkelä, M., Benavente, V., Fullana, A., 2015. Hydrothermal carbonization of lignocellulosic biomass: effect of process conditions on hydrochar properties. Appl. Energy 155, 576–584. https://doi.org/10.1016/j.apenergy.2015.06.022.

Mannarino, G., Caffaz, S., Gori, R., Lombardi, L., 2022a. Environmental life cycle assessment of hydrothermal carbonization of sewage sludge and its products valorization pathways. Waste Biomass Valorization 13, 3845–3864. https://doi.org/10.1007/s12649-022-01821-x.

Mannarino, G., Sarrion, A., Diaz, E., Gori, R., De la Rubia, M.A., Mohedano, A.F., 2022b. Improved energy recovery from food waste through hydrothermal carbonization and anaerobic digestion. Waste Manag. 142, 9–18. https://doi.org/10.1016/j.wasman.2022.02.003.

Marin-Batista, J.D., Villamil, J.A., Qaramaleki, S.V., Coronella, C.J., Mohedano, A.F., de la Rubia, M.A., 2020. Energy valorization of cow manure by hydrothermal carbonization and anaerobic digestion. Renew. Energy 160, 623–632. https://doi.org/10.1016/j.renene.2020.07.003.

Mayer, F., Bhandari, R., Gäth, S.A., 2021. Life cycle assessment on the treatment of organic waste streams by anaerobic digestion, hydrothermal carbonization and incineration. Waste Manag. 130, 93–106. https://doi.org/10.1016/j.wasman.2021.05.019.

Mohammadi, A., Venkatesh, G., Sandberg, M., Eskandari, S., Joseph, S., Granström, K., 2020. A comprehensive environmental life cycle assessment of the use of hydrochar pellets in combined heat and power plants. Sustainability 12, 9026. https://doi.org/10.3390/su12219026.

Morales-Polo, C., Cledera-Castro, M.D.M., Moratilla Soria, B.Y., 2018. Reviewing the anaerobic digestion of food waste: from waste generation and anaerobic process to its perspectives. Appl. Sci. 8, 1804. https://doi.org/10.3390/app8101804.

Moult, J.A., Allan, S.R., Hewitt, C.N., Berners-Lee, M., 2018. Greenhouse gas emissions of food waste disposal options for UK retailers. Food Policy 77, 50–58. https://doi.org/10.1016/j.foodpol.2018.04.003.

Natividad Pérez-Camacho, M., Curry, R., Cromie, T., 2019. Life cycle environmental impacts of biogas production and utilisation substituting for grid electricity, natural gas grid and transport fuels. Waste Manag. 95, 90–101. https://doi.org/10.1016/j.wasman.2019.05.045.

O'Connor, J., Mickan, B.S., Rinklebe, J., Song, H., Siddique, K.H.M., Wang, H., Kirkham, M.B., Bolan, N.S., 2022. Environmental implications, potential value, and future of food-waste anaerobic digestate management: A review. J. Environ. Manage. 318, 115519. https://doi.org/10.1016/j.jenvman.2022.115519.

Ogunleye, A., Flora, J., Berge, N., 2024. Life cycle assessment of hydrothermal carbonization: a review of product valorization pathways. Agronomy 14, 243. https://doi.org/10.3390/agronomy14020243.

Pecorini, I., Rossi, E., Iannelli, R., 2020. Bromatological, proximate and ultimate analysis of OFMSW for different seasons and collection systems. Sustainability 12, 2639. https://doi.org/10.3390/su12072639.

Periyavaram, S.R., K, B.,, Uppala, L., Reddy, P.H.P., 2023. Hydrothermal carbonization of food waste: process parameters optimization and biomethane potential evaluation of process water. J. Environ. Manage. 347, 119132. https://doi.org/10.1016/j.jenvman.2023.119132.

Posmanik, R., Labatut, R.A., Kim, A.H., Usack, J.G., Tester, J.W., Angenent, L.T., 2017. Coupling hydrothermal liquefaction and anaerobic digestion for energy valorization from model biomass feedstocks. Bioresour. Technol. 233, 134–143. https://doi.org/10.1016/j.biortech.2017.02.095.

Ro, K.S., Libra, J.A., Bae, S., Berge, N.D., Flora, J.R.V., Pecenka, R., 2019. Combustion behavior of animal-manure-based hydrochar and pyrochar. ACS Sustain. Chem. Eng. 7, 470–478. https://doi.org/10.1021/acssuschemeng.8b03926.

Rosas-Mendoza, E.S., Alvarado-Vallejo, A., Vallejo-Cantú, N.A., Velasco-Santos, C., Alvarado-Lassman, A., 2024. Valorization of the complex organic waste in municipal solid wastes through the combination of hydrothermal carbonization and anaerobic digestion. Renew. Energy 231, 120916. https://doi.org/10.1016/j.renene.2024.120916.

Sangaré, D., Moscosa-Santillan, M., Aragón Piña, A., Bostyn, S., Belandria, V., Gökalp, I., 2024. Hydrothermal carbonization of biomass: experimental study, energy balance, process simulation, design, and techno-economic analysis. Biomass Convers. Biorefinery 14, 2561–2576. https://doi.org/10.1007/s13399-022-02484-3.

Scarlat, N., Dallemand, J.-F., Fahl, F., 2018. Biogas: developments and perspectives in Europe. Renew. Energy 129, 457–472. https://doi.org/10.1016/j.renene.2018.03.006.

Shi, Z., He, P., Guo, J., Zou, J., Peng, W., Zhang, H., Lü, F., 2024. Carbon reduction trade-off between pretreatment and anaerobic digestion: a field study of an industrial-scale biogas plant. Environ. Res. 246, 118139. https://doi.org/10.1016/j.envres.2024.118139.

Shrivastava, V., Laasri, I., 2025. Nutrient recovery strategies and agronomic performance in circular farming: a comprehensive review. Nitrogen 6, 80. https://doi.org/10.3390/nitrogen6030080.

Suárez, E., Tobajas, M., Mohedano, A.F., de la Rubia, M.A., 2024. Biowaste management by hydrothermal carbonization and anaerobic co-digestion: Synergistic effects and comparative metagenomic analysis. Waste Manag. 180, 1–8. https://doi.org/10.1016/j.wasman.2024.03.019.

Tanguay-Rioux, F., Legros, R., Spreutels, L., 2021. On the limits of empirical partition coefficients for modeling material recovery facility unit operations in municipal solid waste management. J. Clean. Prod. 293, 126016. https://doi.org/10.1016/j.jclepro.2021.126016.

Tanguay-Rioux, F., Monteil-Rivera, F., Ye, M., Matteau Lebrun, F., Vasquez, V., Ngoundjo, F., Frigon, J.-C., Spreutels, L., 2024. Conversion of the solid fraction of food waste separated by a screw press using an integrated hydrothermal carbonization and anaerobic digestion process. Waste Manag. 190, 676–686. https://doi.org/10.1016/j.wasman.2024.10.019.

Tanguay-Rioux, F., Spreutels, L., 2026. Valorization of hydrothermal carbonization process water from food waste through anaerobic digestion: effect of operating conditions and variability of the feedstock. Biomass Convers. Biorefinery 16, 197. https://doi.org/10.1007/s13399-026-07112-y.

Tian, H., Wang, X., Lim, E.Y., Lee, J.T.E., Ee, A.W.L., Zhang, J., Tong, Y.W., 2021. Life cycle assessment of food waste to energy and resources: centralized and decentralized anaerobic digestion with different downstream biogas utilization. Renew. Sustain. Energy Rev. 150, 111489. https://doi.org/10.1016/j.rser.2021.111489.

Tradler, S.B., Mayr, S., Himmelsbach, M., Priewasser, R., Baumgartner, W., Stadler, A.T., 2018. Hydrothermal carbonization as an all-inclusive process for food-waste conversion. Bioresour. Technol. Rep. 2, 77–83. https://doi.org/10.1016/j.biteb.2018.04.009.

Villamil, J.A., Mohedano, A.F., San Martín, J., Rodriguez, J.J., de la Rubia, M.A., 2020. Anaerobic co-digestion of the process water from waste activated sludge hydrothermally treated with primary sewage sludge. A new approach for sewage sludge management. Renew. Energy 146, 435–443. https://doi.org/10.1016/j.renene.2019.06.138.

Wang, F., Yi, W., Zhang, D., Liu, Y., Shen, X., Li, Y., 2020. Anaerobic co-digestion of corn stover and wastewater from hydrothermal carbonation. Bioresour. Technol. 315, 123788. https://doi.org/10.1016/j.biortech.2020.123788.

Wellisch, M., Trépanier, S., 2024. La production de biogaz fait partie intégrante d'un complexe intégré de bioraffinage en pleine évolution au Québec (No. IEA Bioenergy: Task 37: 10 2024). IEA Bioenergy.

Wu, S., Wang, Q., Fang, M., Wu, D., Cui, D., Pan, S., Bai, J., Xu, F., Wang, Z., 2023. Hydrothermal carbonization of food waste for sustainable biofuel production: Advancements, challenges, and future prospects. Sci. Total Environ. 897, 165327. https://doi.org/10.1016/j.scitotenv.2023.165327.

Zhao, Z., Qi, S., Wang, R., Li, H., Song, G., Li, H., Yin, Q., 2024. Life cycle assessment of food waste energy and resource conversion scheme via the integrated process of anaerobic digestion and hydrothermal carbonization. Int. J. Hydrog. Energy 52, 122–132. https://doi.org/10.1016/j.ijhydene.2023.08.203.

Zhou, H., Meng, A., Long, Y., Li, Q., Zhang, Y., 2014. An overview of characteristics of municipal solid waste fuel in China: physical, chemical composition and heating value. Renew. Sustain. Energy Rev. 36, 107–122. https://doi.org/10.1016/j.rser.2014.04.024.

Zhou, Y., Engler, N., Nelles, M., 2018. Symbiotic relationship between hydrothermal carbonization technology and anaerobic digestion for food waste in China. Bioresour. Technol. 260, 404–412. https://doi.org/10.1016/j.biortech.2018.03.102.

Zhu, K., Liu, Q., Dang, C., Li, A., Zhang, L., 2021. Valorization of hydrothermal carbonization products by anaerobic digestion: Inhibitor identification, biomethanization potential and process intensification. Bioresour. Technol. 341, 125752. https://doi.org/10.1016/j.biortech.2021.125752.