Journal of Industrial Ecology (2026) 30:325–346
https://doi.org/10.1007/s44498-026-00023-1

METHODS

Critical analysis of the path-exchange method for hybrid life cycle assessment

Michael P. Weinold[1,2] · Guillaume Majeau-Bettez[3,4]

Received: 13 September 2024 / Accepted: 27 October 2025 / Published online: 1 April 2026
© The Author(s) 2026, modified publication 2026

Abstract
Hybrid life cycle assessment (HLCA) methods combine bottom-up data from process-based inventories with top-down data from environmentally extended input–output tables. This is done to overcome limitations of data coverage and aggregation: While process inventory data is more detailed, it can never be complete. On the other hand, input–output tables offer full cost-coverage for economic inventories that are complete, but highly aggregated into broad economic sectors. Combining these complementary datasets gives a more complete picture of the environmental impact associated with products or services. To this end, different mathematical methods have been proposed. Of the four main methods currently recognized in literature, three combine this data into a hybrid matrix. The path-exchange method instead works at the graph-level by combining the supply-chain paths of both systems. Unlike matrix-based hybrid methods, the accuracy of results of the graph-based method is limited by the number of paths considered, unless remainders are again computed using a matrix-based approach. For the first time, we provide a concise mathematical description of the path-exchange algorithm and conduct a proof that it is not a distinct mathematical method. It is instead equivalent to the tiered-hybrid matrix method with binary correction for double-counting, where upstream flows are inferred from the sectoral system. Based on this finding, we conclude that the path-exchange method confers no distinct mathematical advantages over matrix-based alternatives. Our proof is an important step toward a unified methodological framework for HLCA.

Keywords Hybrid life cycle assessment · Input–output life cycle assessment (IO-LCA) · Life cycle assessment (LCA) · Structural path analysis · Environmental input–output analysis

1 Introduction

Since the early days of life cycle assessment (LCA), researchers have attempted to combine data from complete but highly aggregated input–output tables of the economy with incomplete but high-resolution process-based life cycle inventories into a hybrid inventory. The first attempt was made in the 1970s (Bullard et al., 1978), with most subsequent improvements made from the 1990s (Crawford et al., 2018). The umbrella term *hybrid life cycle assessment* first saw use after 2000, for instance in a review by Lenzen (2000). Today, it designates a number of distinct methods.

Four main methods have been recognized in the literature (Crawford et al., 2018; Islam et al., 2016): The tiered method proposed by Bullard et al. (1978) and formalized by Heijungs and Suh (2022), which was further formalized with respect to its harmonization of system boundaries to avoid double counting by Agez et al. between 2019 and 2022 (Agez et al., 2019). The matrix augmentation method, introduced by Joshi (1999). The integrated method, introduced by Suh and Huppes (2000). Finally, the path-exchange (PXC) method, proposed by Treloar (1997) and formalized by Lenzen and Crawford (2009). Despite recent publications aimed at establishing a standardized taxonomy (Crawford et al., 2018), disagreement remains over the distinctions between methods.

✉ Michael P. Weinold
mweinold@ethz.ch

1 Laboratory for Energy Systems Analysis, PSI Centers for Nuclear Engineering & Sciences and Energy & Environmental Sciences, Villigen, Switzerland

2 Chair of Energy Systems Analysis, Department of Mechanical and Process Engineering, ETH Zurich, Zurich, Switzerland

3 Department of Chemical Engineering, Polytechnique Montréal, Montréal, Canada

4 International Reference Center for Life Cycle Assessment and Sustainable Transition (CIRAIG), Montréal, Canada

Unlike the other three established methods, the path-exchange method operates at the level of the supply chain graph. This sets it apart from any matrix-based method. Its purported unique benefits, however, have remained somewhat elusive. For instance, the original authors have repeated statements of the kind "*Unlike other hybridisation methods, modifications to the supply chain are performed solely on discrete nodes, and thus do not require other changes within the overall matrix*" (Crawford et al., 2017, Sec. 2). What this means for the utility of the method, for instance in the context of double-counting as described most recently by Agez et al. (2019), has remained ambiguous. For instance, while some authors have described the path-exchange methods as employing "*algorithmic corrections for double-counting*" (Cruze, 2013, Sec. 6.1), others go further by claiming that it "*solves problems of double counting*" (Islam et al., 2016, Table 4) or that it "*cannot create any double-counting incident à la* (Strømman et al., 2009)" (Baboulet, 2009, Sec. 2.6.3).

The original authors of the method in 2017 and in 2018 still observed that "*its application has been limited to a small group of scientists*" (Crawford et al., 2017) and in 2018 "*(...) its application is rare and often limited to the group of researchers behind its development*" (Crawford et al., 2018, Sec. 5.2). A systematic literature review shows that the path-exchange method for HLCA today is finding use primarily in the environmental assessment of the built environment, as shown in Table 2 of the Supplementary Information. Most recently, Stephan et al. were awarded the Graedel Best Paper Prize by the Journal of Industrial Ecology for their work on a "*multiscale framework for modeling and improving the life cycle environmental performance of built stocks*" (Stephan et al., 2022), which employs this method.

In this context, we here describe the method in concise mathematical fashion, which allows us to illustrate the algorithm for a simple example system. Finally, we show that the method is, *in theory*, equivalent to the tiered hybrid matrix-based method for HLCA. We highlight the limitations inherent to any path-based algorithm, which mean that *in practice*, the path-exchange method will necessarily be inferior in accuracy to the matrix-based method. Based on this discussion, we caution practitioners against the use of this method. This comprehensive treatment will bring much-needed clarity to the ongoing discussion around the development of methods for HLCA.

2 Mathematical framework

2.1 Example system and diagrammatic notation

We introduce an example system in Fig. 1, which we use extensively in Sect. 5. It consistsof four economic sectors and two production processes. We render the example system in a novel diagrammatic notation which allows for simple identification of process/sector correspondence, instances of double-counting, upstream flows from sectors to processes and the origin of data for every flow. This notation allows for an intuitive understanding of the hybridization of processes and sectors. It also allows us to augment the mathematical definition of the path-exchange method in Eq. (62) with a diagrammatic illustration in Fig. 3. The matrices in Eqs. (1)–(3) correspond to the system in Fig. 1.

$$\mathbf{A}_S = \begin{array}{c} \\ A \\ B \\ C \\ D \end{array} \begin{array}{c} \begin{array}{cccc} A & B & C & D \end{array} \\ \begin{bmatrix} a^S_{AA} & a^S_{AB} & 0 & 0 \\ a^S_{BA} & a^S_{BB} & a^S_{BC} & 0 \\ 0 & a^S_{CB} & a^S_{CC} & a^S_{CD} \\ a^S_{DA} & 0 & a^S_{DC} & a^S_{DD} \end{bmatrix} \end{array} \tag{1}$$

$$\mathbf{A}_P = \begin{array}{c} \\ 1 \\ 2 \end{array} \begin{array}{c} \begin{array}{cc} 1 & 2 \end{array} \\ \begin{bmatrix} 0 & 0 \\ a^P_{21} & 0 \end{bmatrix} \end{array} \tag{2}$$

$$\mathbf{H} = \begin{array}{c} \\ A \\ B \\ C \\ D \end{array} \begin{array}{c} \begin{array}{cc} 1 & 2 \end{array} \\ \begin{bmatrix} 1 & 0 \\ 0 & 1 \\ 0 & 0 \\ 0 & 0 \end{bmatrix} \end{array} \tag{3}$$

2.2 Mathematical convention and table of symbols

For the sake of simplicity in the equations of our proof, but without loss of generality, we assume that both the process system and the sectoral system are already defined in the same units—either monetary or physical. For a detailed description of the conversion between these, we refer the reader to the comprehensive treatment by Weisz and Duchin (2006).

For the sake of simplicity in our hybrid matrix representation, we have adopted the $\vec{e} = \mathbf{B}_P(\mathbf{I} - \mathbf{A}_P)^{-1}\vec{f}_P$ convention for the governing equation of process-based life cycle assessment. For a helpful discussion of the two different conventions, compare the comprehensive treatment by Heijungs et al. (2022).

We employ the terms *node* and *edge* consistent with their standard usage in graph theory (Harary, 1969, p. 9), where an *edge* is the flow between two *nodes*. In our case, a node could be a production process or economic sector, while an edge is the monetary of physical flow between them.

A table of symbols is provided in Table 1.

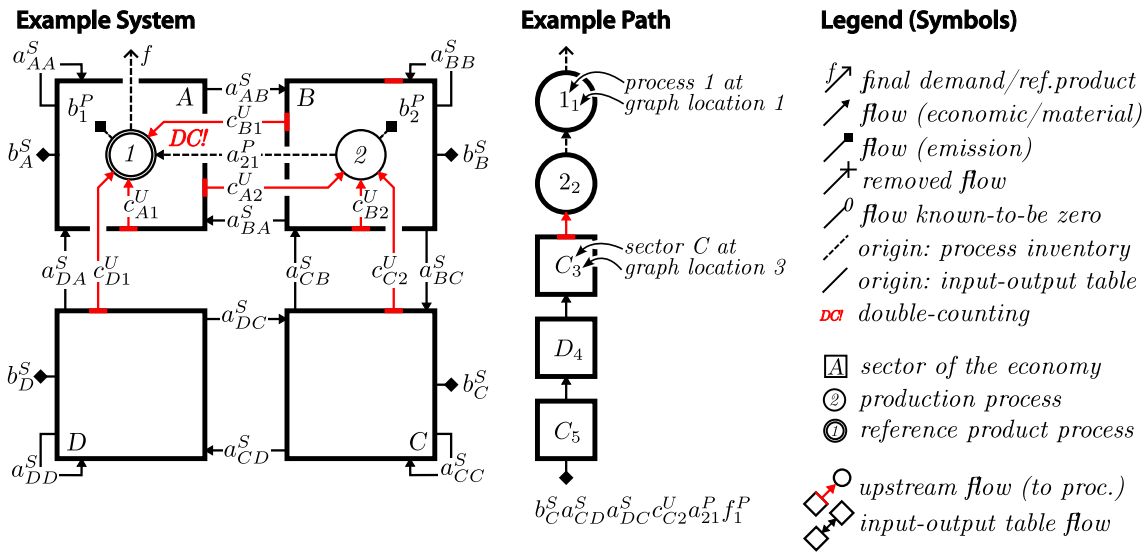

Fig. 1 An example system of four sectors (A–D) and two processes (1,2), with corresponding matrices as defined in Eqs. (1)–(3) and symbols in Table 1. Flows and emissions are annotated explicitly for the benefit of the reader. Note that not all sectors are connected to limit the complexity of the example. The diagrammatic notation is described in a legend presented in the right panel of the figure. This system is used in Fig. 3 and the mathematical proof of Sect. 4, among other instances

Table 1 Mathematical notation for vectors and matrices used throughout this article

Index	System	Description
$i \in \mathbb{N}$, for $(1 \leq i \leq M)$	Process system	Production process ("activity")
$j \in \mathbb{N}$, for $(1 \leq j \leq N)$	Sectoral system	Economic sector
$k \in \mathbb{N}$, for $(1 \leq k \leq R)$	Process system	Environmental burdens (biosphere flows)
$l \in \mathbb{N}$, for $(1 \leq l \leq P)$	Sectoral system	Environmental burdens (env. satellite categories)

Matrix or vector	Description
$\mathbf{A}_P \in \mathbb{R}_{M \times M}$	Process system A-matrix [technology matrix (Heijungs & Suh, 2022)]
$\mathbf{B}_P \in \mathbb{R}_{R \times M}$	Process system environmental flow matrix [intervention matrix (Heijungs & Suh, 2022)]
$\vec{f}_P \in \mathbb{R}_{M \times 1}$	Final demand vector
$\vec{e}_P \in \mathbb{R}_{R \times 1}$	Environmental flow vector
$\vec{x}_P \in \mathbb{R}_{M \times 1}$	Output vector
$\mathbf{C}_U \in \mathbb{R}_{N \times M}$	Upstream cut-off matrix
$\mathbf{A}_S \in \mathbb{R}_{N \times N}$	Technical coefficient matrix
$\mathbf{B}_S \in \mathbb{R}_{P \times N}$	Environmental satellite matrix
$\mathbf{H} \in \mathbb{R}_{N \times M}$	Concordance matrix
$\vec{p} \in \mathbb{R}_{N \times 1}$	Price vector
$\mathbf{\Theta}_{K0} \in \mathbb{R}_{N \times M}$	Binary correction matrix for flows known to be zero
$\mathbf{\Theta}_{DC} \in \mathbb{R}_{N \times M}$	Binary correction matrix for double-counting

The subscript P denotes the process system, the subscript S denotes the sectoral system and the subscript H denotes the hybrid system. For a complete derivation of the associated governing equations, refer to the Supplementary Information. Following established notation in linear algebra (Lang, 1987, p. 26), $\mathbf{A} \in \mathbb{R}_{R \times M}$ designates a matrix $\mathbf{A}$ of size $R \times M$ with all coefficients being elements of the real number field $\mathbb{R}$

2.3 Matrix-based HLCA framework

Recent reviews recognize three distinct methods for HLCA which can be expressed in matrix form: the tiered hybrid methods, the integrated hybrid method and the matrix-augmentation hybrid method (Bakindi et al., 2025, Sec. 3.4; Crawford et al., 2018, Sec. 5.2; Hagenaars, 2025, Sec. 4.1.1; Liu et al., 2024, Sec. 4; Suh & Huppes, 2005). While we must defer to these publications for detailed treatment of other different methods, we recapitulate the derivation of the tiered hybrid matrix method in the Supplementary Information for the benefit of the reader.

The basic assumption of the tiered hybrid method is that production processes consume inputs from other production processes, and in addition, consume "upstream" inputs from different sectors of the economy. Bearing in mind that a coefficient a_{ij} of the A-matrices defined in Table 1 describes the flow from node $i \rightarrow j$, we can consider a column of the A-matrix as the "production recipe" for the associated process or sector. With this, the governing equation of the tiered hybrid matrix method can therefore be written in the form most frequently used in literature:

$$\vec{e}_{H(tiered)} = \begin{pmatrix} \mathbf{B}_P & 0 \\ 0 & \mathbf{B}_S \end{pmatrix} \begin{pmatrix} \mathbf{I} - \mathbf{A}_P & 0 \\ \mathbf{C}_U^{corr} & \mathbf{I} - \mathbf{A}_S \end{pmatrix}^{-1} \begin{pmatrix} \vec{f}_P \\ 0 \end{pmatrix} \tag{4}$$

The upstream cutoff matrix $\mathbf{C}_U$ contains information on all flows from sectors to processes. It can be populated *manually* by the practitioner. It can also be populated *automatically*, by inferring flows from the sectoral system, as first described by Strømman and Solli (2008). An intuitive illustration of this process is provided in Fig. 2.

Here, for process 1 we originally have information only on a single input a_{21}^P from process 2. If the coefficients of the upstream cutoff matrix are now inferred from the requirements of sector A as $c_{B1}^U = a_{BA}^S$, there is a risk of "double counting" the inputs of a_{21}^P. This illustrates the need for harmonization of the boundaries of the process and sectoral inventories through an automated correction for double counting.

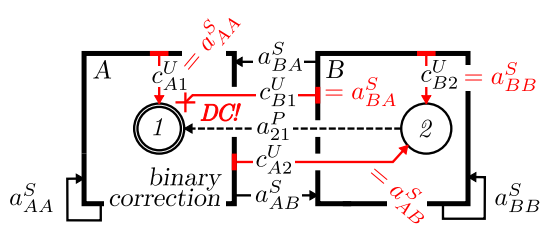

Fig. 2 A simple example system consisting of two sectors (A, B) and two processes (1,2), adapted from the larger system in Fig. 1. Shown is the process by which upstream flows c^U are inferred ("=") from the sectoral system, as well as an instance of double-counting ("DC!"): If both the upstream flow c_{B1}^U and the process flow a_{21}^P are retained, the environmental impact upstream of process 1 will be overestimated. Under the binary double-counting correction technique, the upstream flow c_{B1}^U is removed ("X") altogether. The upstream flow c_{A2}^U is not removed, since no process flow to process 1 originates in sector B. For a legend of the diagrammatic notation used, compare the right panel of Fig. 1

The construction of the *uncorrected* upstream cutoff matrix according to Strømman can be formally defined as (Agez et al., 2019, Eqn. (7); Strømman & Solli, 2008, Eqn. (4)ff.)

$$\mathbf{C}_U^{uncorr} = \mathbf{A}_S \mathbf{H} \tag{5}$$

$$= \begin{array}{c} \\ A \\ B \end{array} \begin{array}{c} \begin{array}{cc} A & B \end{array} \\ \begin{bmatrix} a_{AA}^S & a_{AB}^S \\ a_{BA}^S & a_{BB}^S \end{bmatrix} \end{array} \begin{array}{c} \\ A \\ B \end{array} \begin{array}{c} \begin{array}{cc} 1 & 2 \end{array} \\ \begin{bmatrix} 1 & 0 \\ 0 & 1 \end{bmatrix} \end{array} \tag{6}$$

$$= \begin{array}{c} \\ A \\ B \end{array} \begin{array}{c} \begin{array}{cc} 1 & 2 \end{array} \\ \begin{bmatrix} c_{A1}^U = a_{AA}^S & c_{A2}^U = a_{AB}^S \\ c_{B1}^U = a_{BA}^S & c_{B2}^U = a_{BB}^S \end{bmatrix} \end{array} \tag{7}$$

using the concordance matrix $\mathbf{H}$. As detailed in the Supplementary Information, a concordance matrix contains the information required to assign each process to one or more sectors of the economy. It can be used to convert vectors or matrices from the process-basis into the sector-basis.

$$(\mathbf{H})_{ij} = \begin{cases} 1 & \text{if sector } i \text{ contains process } j \\ 0 & \text{else} \end{cases} \tag{8}$$

However, Fig. 2, illustrates that inferring upstream flows through Eq. (5) leads to potential cases of *double-counting*. These are instances in the hybrid system where an upstream flow from a sector into a process is already covered by a process flow.

The upstream cut-off matrix must therefore be corrected to avoid double-counting. For a comprehensive discussion of different double-counting correction methods, compare the recent review by Agez et al. (2019). Here, we use the binary double-counting correction method.[1] Under this correction method, the upstream input from sector i into process j is set to zero, if any process flow to process j originates from a process contained in sector i. The concept is illustrated in Fig. 2. As we will see later, the path-exchange method essentially employs an identical logic.

In matrix notation, this can be expressed through a binary double-counting correction matrix $\mathbf{\Theta}_{DC}$

$$\mathbf{C}_U^{corr} = \mathbf{\Theta}_{DC} \otimes \mathbf{C}_U^{uncorr} \tag{9}$$

[1] Note that a small error is present in the equations for the corrected upstream cut-off matrix $\mathbf{C}_U^{corr}$ provided by Agez et al. (2019, (8)–(8')). Instead of the standard matrix multiplication the authors meant to use the Hadamard product (Agez, 2024).

where a coefficient of the correction matrix is intuitively defined as

$$(\mathbf{\Theta}_{DC})_{ij} = \begin{cases} 0 & \text{if } \exists \text{ any process flow from} \\ & \quad \text{within sector } i \rightarrow \text{process } j \\ 1 & \text{else} \end{cases} \tag{10}$$

For the proof in Sect. 4, we must prepare a mathematical formulation of the conditions in Eq. (10). We first introduce the Iverson bracket, which is a generalization of the Kronecker delta (Knuth, 1992). It is defined such that it evaluates to 1 if the condition in the bracket is true and evaluates to 0 otherwise. In our case, we use the condition

$$[x \stackrel{?}{=} 0] = \begin{cases} 1 & \text{if } x = 0 \\ 0 & \text{else} \end{cases} \tag{11}$$

where the question mark above the equality indicates that the expression is a logical condition evaluated by the Iverson bracket, rather than an assignment. Using the Iverson bracket notation and the definition of the concordance matrix, we can now formalize the equation which applies the binary double-counting correction technique to the uncorrected upstream flow matrix.

$$c_{ij}^{U,corr} = \left[\sum_{k=1}^{M} h_{ik} a_{kj}^{P} \stackrel{?}{=} 0 \right] c_{ij}^{U,uncorr} \tag{12}$$

According to the definition of the concordance matrix in Eq. (8)

$$h_{ik} a_{kj}^{P} = \begin{cases} a_{kj}^{P} & \text{if flow from process} \\ & \quad k \rightarrow j \text{ originates in sector } i \\ 0 & \text{else} \end{cases} \tag{13}$$

and

$M < i \leq N \ldots$ index i iterates over all N sectors
$1 \leq j \leq M \ldots$ index j iterates over all M processes
$1 \leq k \leq M \ldots$ index k iterates over all M processes

We can see that the expression in the Iverson bracket evaluates to 1, only if no process in sector i has a flow a^P that terminates in process j. This is the definition of binary double-counting correction for HLCA. Using this notation, we can write corrected coefficients of the upstream flow matrix from the simple example in Fig. 2.

$$c_{B1}^{U,corr} = [0 \stackrel{?}{=} 0] c_{B1}^{U,uncorr} = c_{B1}^{U,uncorr} \tag{14}$$

$$c_{C1}^{U,corr} = [a_{21}^{P} \stackrel{?}{=} 0] c_{C1}^{U,uncorr} = 0 \tag{15}$$

In matrix form, Eq. (12) can be expressed as

$$\mathbf{C}_U^{corr} = [\mathbf{H}\mathbf{A}_P \stackrel{?}{=} 0] \otimes \mathbf{C}_U^{uncorr} = \mathbf{\Theta}_{DC} \otimes \mathbf{C}_U^{uncorr} \tag{16}$$

There may also be cases where we know some upstream inputs to be zero. Correcting for this is accomplished through a binary known-to-be-zero correction matrix $\mathbf{\Theta}_{K0}$

$$(\mathbf{\Theta}_{K0})_{ij} = \begin{cases} 0 & \text{if upstream flow from sector } i \rightarrow \text{ process} \\ & \quad j \text{ known to be zero} \\ 1 & \text{else} \end{cases} \tag{17}$$

and adapting Eq. (16)[2]

$$\mathbf{C}_U^{corr} = \mathbf{\Theta}_{K0} \otimes \mathbf{\Theta}_{DC} \otimes \mathbf{C}_U^{uncorr} \tag{18}$$

2.4 Path-based HLCA framework

As per the governing equation of both environmentally-extended input–output analysis and process-based life cycle assessment, the environmental burden vector $\vec{e}$, which gives the total environmental burdens incurred from an arbitrary final demand $\vec{f}$, can be written as

$$\vec{e} = \mathbf{B}(\mathbf{I} - \mathbf{A})^{-1} \vec{f} = \mathbf{B}\mathbf{L}\vec{f} \tag{19}$$

In this context, $\mathbf{L}$ is known as the Leontief inverse. In the following, we will limit the discussion to the case of a single environmental burden (eg. carbon dioxide emissions). The above equation then becomes

$$e = \vec{b}^T \mathbf{L} \vec{f} \tag{20}$$

The first part of the equation is also known as the multiplier vector (Miller & Blair, 2022, Sec. 6.2.3, Sec. 8.5.1)

$$\vec{m}^T = \vec{b}^T \mathbf{L} \tag{21}$$

As originally proposed by Waugh (1950) and reported by Miller and Blair (1985, 2009, 2022), the Leontief inverse $\mathbf{L} = (\mathbf{I} - \mathbf{A})^{-1}$ can be approximated by a power series, since $\sum_{i=1}^{n} a_{ij} < 1 \wedge a_{ij} \geq 0$ (Miller & Blair, 2022, Sec. 2.4.2).

$$\mathbf{L} = (\mathbf{I} - \mathbf{A})^{-1} = (\mathbf{I} + \mathbf{A} + \mathbf{A}^2 + \mathbf{A}^3 + \ldots) \tag{22}$$

This is sometimes called *production layer decomposition* (Lenzen & Crawford, 2009) and is discussed at length by

[2] Strømman and Solli (2008, Eqn. (3)) included $\mathbf{\Theta}_{K0}\mathbf{\Theta}_{DC}$ in a single matrix $\mathbf{\Theta}$. The use of two separate matrices is more instructive when defining the logical conditions inherent in the binary double-counting correction matrix mathematically.

Suh and Heijungs (2007). It forms the basis of both *structural path analysis*[3] in general and the path-exchange method for the *hybrid method* for life cycle assessment in particular. A path in this context describes a product of coefficients of the kind $b_3 a_{32} a_{21}$. These paths are formally known as directed acyclic graphs (Harary, 1969, p. 200ff.). With this, the environmental burden multiplier vector $\vec{m}^T$ in Eq. (21) can be expressed using the product layer decomposition in Eq. (22) as

$$m_i = b_i + \sum_{j=1}^{N} b_j a_{ji} + \sum_{k=1}^{N}\sum_{j=1}^{N} b_k a_{kj} a_{ji} + \sum_{l=1}^{N}\sum_{k=1}^{N}\sum_{j=1}^{N} b_l a_{lk} a_{kj} a_{ji} + \dots \tag{23}$$

The path-exchange method now operates by combining paths from the production layer decomposition of a process system and a sectoral system. The associated algorithm is described in detail in Sect. 3.1. Similar to Eq. (4), we introduce the following notation to describe operation of the path-exchange method on both the sectoral and process paths

$$e = \mathrm{PXC}\{\mathbf{B}_S(\mathbf{I} - \mathbf{A_S}), \mathbf{B}_P(\mathbf{I} - \mathbf{A}_P)^{-1}\}\vec{f}_P \tag{24}$$

3 The path-exchange method for hybrid life cycle assessment

3.1 General description and illustration

As detailed in Sect. 3.2, the path-exchange algorithm was first proposed by Lenzen and Crawford (2009). Unfortunately, a formal mathematical or pseudo-code definition of this first implementation of the algorithm (hereafter named "PXC(2009)") was not provided. Instead, the different steps were traced out explicitly using a practical example.

Subsequent publications on the methodology of the path-exchange method by Crawford et al. (2017) and Stephan et al. (2019) (hereafter named "PXC(2017/2019)") changed the definition of the method slightly (Crawford et al., 2017, Sec. 3.2; Stephan et al., 2019, Sec.2.1). No formal definition of the new implementation was provided either, although the method was visually illustrated in Stephan et al. (2017, Figure 2; 2019, Figure 1). The method consists of multiple discrete steps, which we have illustrated in Fig. 3 using our novel diagrammatic notation.

[3] A detailed discussion of the evolving use of the term *structural path analysis* is provided in the Supplementary Information.

3.2 Historical development and motivation

Lenzen in his first complete formulation of the path-exchange method for HLCA describes his work (Lenzen, 2002a, Sec. 1) as building on the earlier method of Treloar (1998, Sec. 4), then referred to as "*an innovative input–output based hybrid analysis method*" (Treloar et al., 2001, p. 205). He then asserts that "*The general decomposition approach* [used in the path-exchange method] *was introduced into economics and regional science in 1984 under the name Structural Path Analysis*", citing Defourny and Thorbecke (1984) and Crama et al. (1984). We find this representation of the lineage of the method to be incorrect, and present a more accurate version in Table 2. A detailed discussion of this lineage is presented in the Supplementary Information.

3.3 Motivation and misconceptions

To support our formal proof in Sect. 4, we are providing a detailed discussion of four major misconceptions associated with the path-exchange method for HLCA in Sects. 3.3.1–3.3.3. These misconceptions have all been used to motivate the introduction and use of the method and are among the reasons why the path-exchange method has so far been listed as a separate HLCA method in reviews publications.

3.3.1 Avoiding changing coefficients in the sectoral matrix

Treloar in his 1998 thesis motivated the introduction of his first version of the path-exchange method from two different perspectives: "*The process analysis framework cannot be used as a basis for hybrid analysis because of its incompleteness (ie, regardless of the greater reliability of the process analysis data). The comprehensive input–output framework cannot currently be used as basis for hybrid analysis because the substitution of process analysis data into the input–output model causes unwanted indirect effects*" (Treloar, 1998, Sect. 1).

The first point relates to the lack of available data for building the background inventory of a process-based life cycle assessment. At that time, the *Ecoinvent* database predecessor *ETH 96* had just been released and featured less than 2500 individual processes (Frischknecht & Rebitzer, 2005; Mongelli et al., 2005)—a number which has since increased to over 20,000 in the latest version (Ecoinvent Support, 2024; Steubing et al., 2016). The hope of Treloar was therefore to utilize readily available and up-to-date government-compiled input–output tables for better data coverage.

The interpretation of the second point is more involved and reveals an important misconception which has been frequently repeated since then. Treloar goes on to specify that "*(...) input–output-based hybrid analysis (...) involves the substitution of process analysis data for coefficients in the*

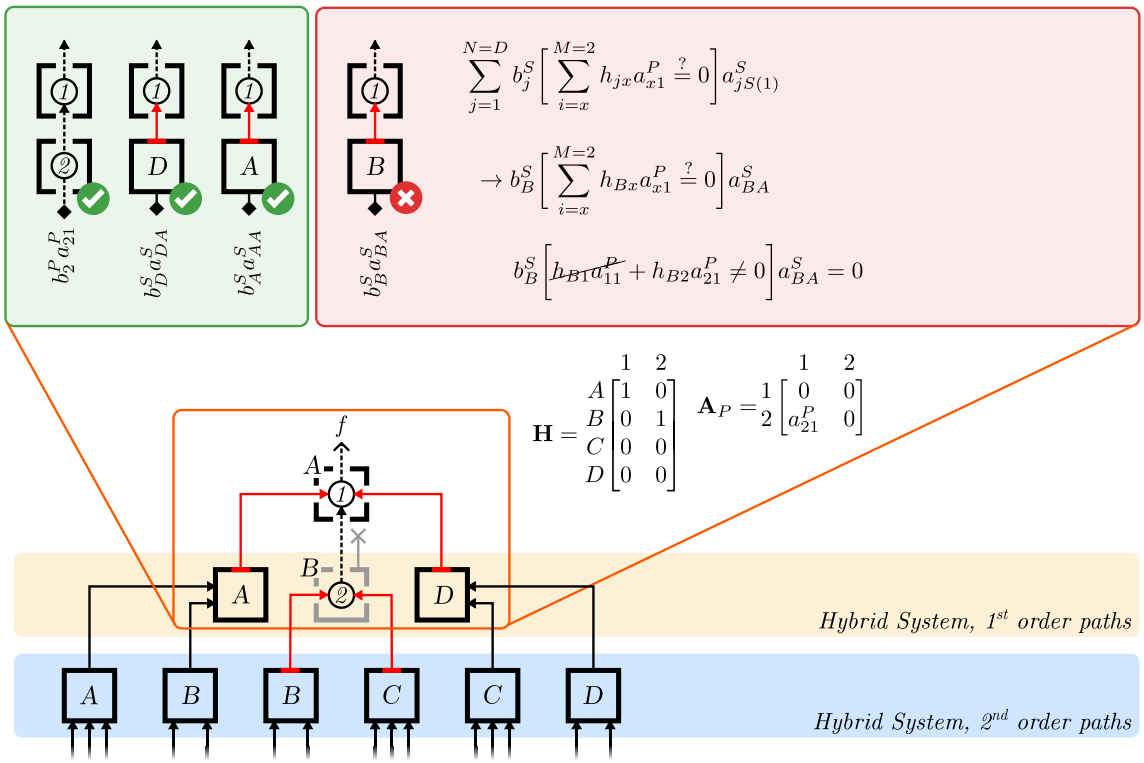

Fig. 3 Visual representation of the PXC(2017/2019) algorithm, using the example system of Fig. 1. First, the algorithm conducts a structural path analysis of both the process system and the sectoral system. Of this, here we show only paths of orders 1–2 terminating in process 1. For order 1, we obtain one process path $b_2^P a_{21}^P$ and three sectoral paths $b_D^S a_{DA}^S$, $b_A^S a_{AA}^S$, $b_B^S a_{BA}^S$. Now, the algorithm "*matches*" the paths based on a concordance matrix **H**. In our diagrammatic notation, this is intuitively shown by process symbols being contained in sector symbols. Now, those sectoral paths are removed for which there is a direct process path equivalent. In this example, this is the case only for path $b_B^S a_{BA}^S$, which has the equivalent $b_2^P a_{21}^P$. Summing all paths according to Sect. 2.4 now yields the "hybrid" environmental impact. The mathematical formulation of this condition is shown next to the removed path. For a definition of the Iverson bracket operator used, compare Eq. (61). For a legend of the diagrammatic notation, compare the right panel of Fig. 1

Table 2 Milestones in the historical development of the path-exchange method for HLCA

Authors	Year	Contribution	
Waugh	1950	Power series expansion of the Leontief inverse	Waugh (1950)
Bullard et al.	1975	Power series expansion of the Leontief inverse and coefficient replacement	Bullard and Herendeen (1975)
Seeman	1984	Power series expansion of the Leontief inverse and coefficient replacement	Seeman (1984)
Treloar	1997	Refined method for coefficient replacement	Treloar (1997)
Lenzen et al.	2009	First formalization in the context of life cycle assessment	Lenzen (2009)
Crawford et al.	2017	Workflow formalization	Crawford et al. (2017)
Stephan et al.	2019	Software implementation	Stephan et al. (2019)

direct input–output matrix (Bullard et al., 1978; Seeman, 1984)" (Treloar et al., 1998, Sec. 2.3.2).

The concern here is that changes made to a technical coefficient of the input–output matrix in the context of one specific supply chain affect all other supply chains involving this technical coefficient.

This is an understandable concern in principle. However, the referenced publication by Bullard et al. does not modify the input–output matrix at all. It is instead an early example of input–output-based life cycle assessment, as described most recently by Heijungs et al. (2022). We must stress that the publication of Bullard et al. does not attempt to hybridize data, nor replace any coefficients in the input–output matrix, as claimed.[4]

[4] In the last paragraph, the theoretical possibility of "integrating" process data and input–output data is mentioned: "*With more extensive data, such as that from a conventional LCA, and a two-step process that integrates these data into the input–output matrix, we believe the two*

Similarly, the referenced thesis of Seeman does not modify the input–output matrix with more specific coefficients either. He briefly suggests a way to dis-aggregate sectors into more specific sub-sectors, thereby adding new columns and rows to the technical coefficient matrix. This approach would later be described in detail by Joshi (1999) and is now commonly referred to as the *matrix-augmentation* hybrid method (Crawford et al., 2018). The calculations of Seeman, however, do not actually employ this dis-aggregation.[5] Instead, he describes a method for using the power series expansion of the Leontief inverse where input–output technical coefficients are replaced with more process-specific coefficients. This was already suggested by Bullard some 10 years earlier (Bullard & Herendeen, 1975). We must stress again that the publications of Seeman and Bullard et al. do not replace any coefficients in the input–output matrix, as claimed.

Apart from the integrated method for HLCA, where this is done deliberately, no hybrid analysis modifies the coefficients of the sectoral matrix. This includes the publications cited by Treloar. Note also that when Treloar made his proposal in 1997, the integrated method for HLCA had not yet been developed—and could therefore not have been referenced by him. Only two early publications by Bullard et al. (1976, 1978) on what is today designated the tiered hybrid method had been published at the time.

Even so, this second point of the original motivation for the path-exchange method continued to be cited in subsequent publications: *"Treloar observed that changing the transaction coefficient for a particular element, or node, in an input–output matrix used for LCA would affect all supply chain paths that contain that node, even if the changed coefficients applied only to a particular path. Treloar correctly recognized that SPA provides a means to avoid such undesired "global" effects"* (Lenzen & Crawford, 2009, Sec. 1).

In summary, the second of two key issues cited as the original motivation for the introduction of the path-exchange method is not supported by the literature cited.

3.3.2 Working on mutually exclusive nodes

More recent publications on the path-exchange method have built on the misconception of Sect. 3.3.1 and listed as the main advantage of this approach that "*(...) it operates on mutually exclusive process and input output nodes*" (Stephan et al., 2019, p. 240) and that "*Unlike other hybridisation methods, modifications to the supply chain are performed solely on discrete nodes, and thus do not require other changes within the overall matrix*" (Crawford et al., 2017, p. 159).

This suggests that the path-exchange hybrid method, unlike matrix methods, can selectively modify nodes or edges in the supply chain pathways of a sectoral system and replace them with more precise nodes or edges from another system.

However, this is another misconception about the path-exchange method. In fact, selective replacement of sectoral information for process information at arbitrary locations in the supply chain graph can easily be achieved using a matrix-based system. As an example, consider a system illustrated in Fig. 4.

We first posit that we have obtained specific information on edge $a^S_{B_2A_1}$, the flow from the electricity sector into the metals sector, which in the following, we designate this specific instance of the electricity sector as B_2^*. This includes data on the specific environmental burden $b^S_{B_2^*}$ and the amount of flow $a^S_{B_2^*A_1}$. Note that according to the legend in Fig. 1, the integer subscripts here indicate the position of the node or edge in the supply chain. The corresponding path

$$b^S_{B_2^*} a^S_{B_2^*A_1} f^S_A \tag{25}$$

is shown in Fig. 4. Now, we consider an arbitrary third order path of the sectoral system. Note that the edge a^S_{BA} appears in different locations of this supply chain. It is underlined for emphasis.

$$b^S_{B_4} \underline{a^S_{B_4A_3}} a^S_{A_3B_2} \underline{a^S_{B_2A_1}} f^S_A \tag{26}$$

According to Sect. 3.1, this path is now altered by the path-exchange method to

$$b^S_{B_4} a^S_{B_4A_3} a^S_{A_3B_2} a^S_{B_2^*A_1} f^S_A \tag{27}$$

The path-exchange method has targeted a specific edge, denoted as $a^S_{B_2A_1}$, at a particular point in the supply chain and replaced it with another edge instance, $a^S_{B_2^*A_1}$, without altering other instances of the node-edge pair, such as $a^S_{B_4A_3}$.

However, such a scenario can be easily captured in matrix form. The key to understanding this equivalence lies in the abstract notion that *specific information always lives on a specific supply chain*.

First, it is important to realize that in this example, we have information *only* on the electricity production node which feeds directly into the metal production node $B_2 \rightarrow A_1$. We have no information on electricity production nodes which appear *further upstream* in the supply chain, such as $B_4 \rightarrow A_3$.

To elaborate, consider again the first-order path of Eq. (25). In our scenario, we have specific information on the

Footnote 4 continued
approaches can be integrated" (Lave, 1995). However, this "*integration*" is not described there in any further detail, nor is its implementation within the scope of the publication.

[5] The only change to the technical coefficient matrix that is made as part Seeman's calculations is the conversion of "*(...) the outputs of the energy sectors from dollars to megajoules (...)*" to facilitate the analysis of energy flows rather than economic flows.

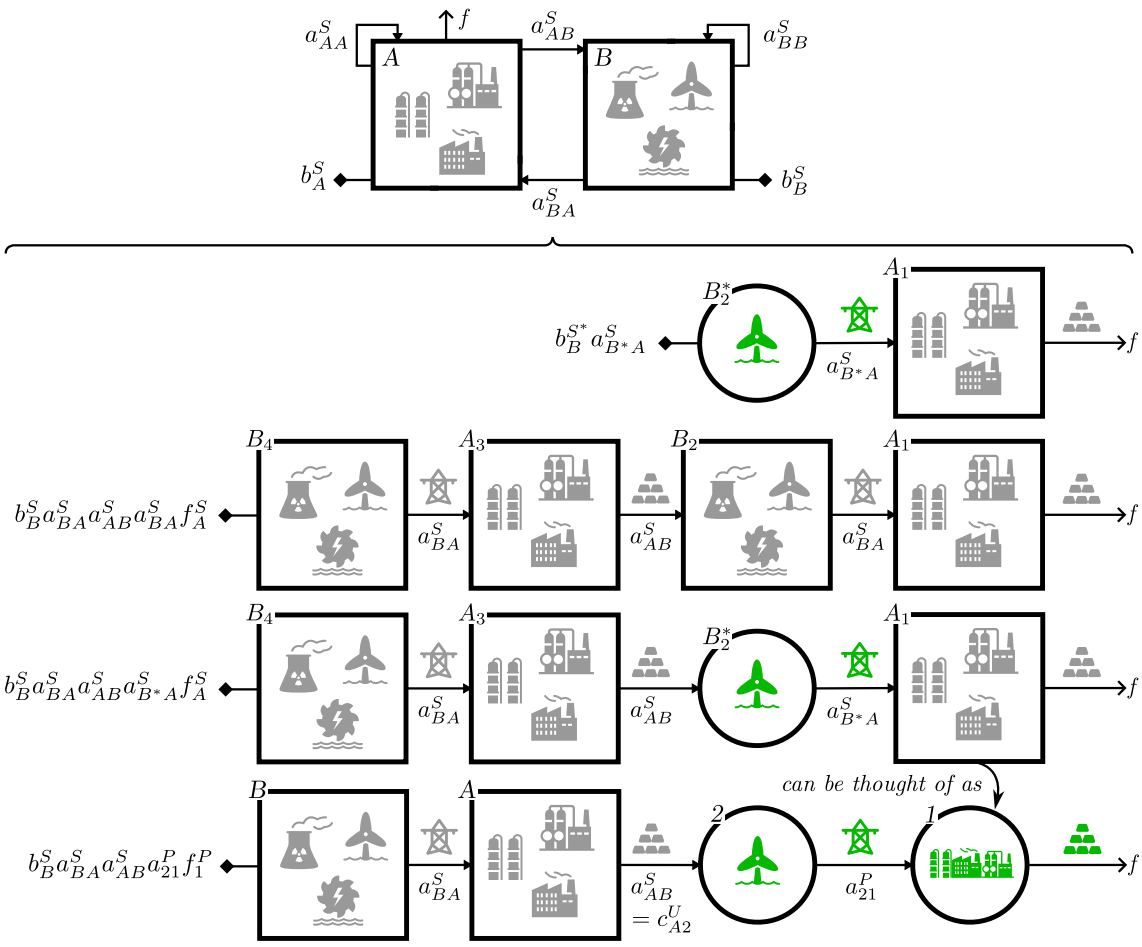

Fig. 4 Top: A simple example system consisting of two sectors (A, B), adapted the larger system in Fig. 1. Here, we assume sector A produces metals, while sector B supplies electricity. Bottom: An example path of order three: $b_B^S a_{BA}^S A_{AB}^S A_{BA}^S f_A^S$, in which a coefficient a_{BA}^S is exchanged for a more specific coefficient $a_{B^*A}^S$. For a legend of the diagrammatic notation, compare the right panel of Fig. 1

environmental burden coefficient $b_{B_2}^{S*}$ of node B at position 2 in the graph:

$$B_2 \rightarrow A_1 \rightarrow f \tag{28}$$

$$B_2^* \rightarrow A_1 \rightarrow f \tag{29}$$

From Eq. (29) we can see that in our scenario we know *not only* something specific about node B_2, but *also* something about node A_1. At the very least, we know that in our specific supply chain, node A_1 does not consume the average input of node B_2, but the input of a specific node B_2^*. In our scenario, this is the only thing we know about node A_1. All other properties of this node we simply *infer* from the input–output system. These properties are the technical coefficient to this node a_{BA}^S and the environmental burden coefficient b_A^S.

We can therefore think of node A_1 as a *specific* node instance of sector A, much like B_2^* is a *specific* node instance of sector B. For consistency, we therefore denote it A_1^*. This means that in our specific example, we have taken the metal production sector as a *proxy* for the metal production process under investigation.

How can we collect this specific information? One way to do so is in a process matrix $\mathbf{A}_P$ and an environmental burden coefficient vector $\vec{B}_P$. We can also think of these specific sectoral node instances (A^*, B^*) as processes (1, 2).

$$\mathbf{A}_P = \begin{array}{c} \\ A^* \\ B^* \end{array} \begin{array}{c} \begin{array}{cc} A^* & B^* \end{array} \\ \begin{bmatrix} 0 & 0 \\ a_{BA}^S & 0 \end{bmatrix} \end{array} = \begin{array}{c} \\ 1 \\ 2 \end{array} \begin{array}{c} \begin{array}{cc} 1 & 2 \end{array} \\ \begin{bmatrix} 0 & 0 \\ a_{21}^P = a_{BA}^S & 0 \end{bmatrix} \end{array} \tag{30}$$

$$\vec{B}_P = \begin{array}{c} A^* \\ B^* \end{array} \begin{bmatrix} b_A^S \\ b_B^{S*} \end{bmatrix} = \begin{array}{c} 1 \\ 2 \end{array} \begin{bmatrix} b_1^P = b_A^S \\ b_2^P = b_B^{S*} \end{bmatrix} \tag{31}$$

We can see that in Eq. (30), the technical coefficient a_{21}^P between nodes B_2 and A_1 is simply the technical coefficient a_{BA}^S. Similarly, we can see that in Eq. (31), the environmental

burden coefficient b_2^P for node B_2 is simply the *specific* coefficient b_B^{S*} of which we have knowledge. The environmental burden coefficient b_1^P for node A_1 is simply the sectoral average environmental burden coefficient b_A^S.

We know one more thing about node B_2. Since it is a specific instance of sector B, we can see from Fig. 4 that is takes input from sector A. We record this information in an upstream flow matrix $\mathbf{C}_U$.

$$\mathbf{C}_U = \begin{array}{c} \\ A \\ B \end{array} \begin{array}{c} \begin{array}{cc} 1 & 2 \end{array} \\ \begin{bmatrix} 0 & c_{A2}^U = a_{AB}^S \\ 0 & 0 \end{bmatrix} \end{array} \tag{32}$$

We can now, according to the definition of matrix-based methods for HLCA (Crawford et al., 2018), combine this process matrix $\mathbf{A}_P$ with the input–output technical coefficient matrix $\mathbf{A}_S$. We do the same for the environmental burden coefficient vectors.

$$\mathbf{A}_H = \begin{array}{c} \\ 1 \\ 2 \\ A \\ B \end{array} \begin{array}{c} \begin{array}{cccc} 1 & 2 & A & B \end{array} \\ \left[\begin{array}{cc|cc} 0 & 0 & 0 & 0 \\ a_{21}^P = a_{BA}^S & 0 & 0 & 0 \\ \hline 0 & c_{A2}^U = a_{AB}^S & a_{AA}^S & a_{AB}^S \\ 0 & 0 & a_{BA}^S & a_{BB}^S \end{array}\right] \end{array} \tag{33}$$

$$\vec{B}_H = \begin{array}{c} 1 \\ 2 \\ A \\ B \end{array} \begin{bmatrix} b_1^P = b_A^S \\ b_2^P = b_B^{S*} \\ b_A^S \\ b_B^S \end{bmatrix} \tag{34}$$

Conducting a structural path analysis on the hybrid matrix in Eq. (33), we get:

$$m_1 \sim b_2^P a_{21}^P + a_B^S a_{BA}^S c_{A2}^U a_{21}^P + \ldots \tag{35}$$

This is equivalent to the path-exchange approach. As we can see, the matrix-based solution retains

$$B_4 \rightarrow A_3 \rightarrow B_2^* \rightarrow A_1^* \rightarrow f \tag{36}$$

Note that according to the legend in Fig. 1, the integer subscripts here indicate the position of the node in the supply chain. In summary, it is key to understand that we *can* make modifications of specific nodes in a supply chain graph. However, this means that a node in one of the production layers can be modified without modifying that node in all other production layers. All nodes downstream of this modified node become specific node instances. We can infer their parameters from the input–output system and record them in a process matrix. This matrix can then be solved exactly according to the governing equation of input–output analysis $(\mathbf{I} - \mathbf{A})^{-1}\vec{f} = \vec{x}$ (Miller & Blair, 2022, Eqn. (2.11)).

3.3.3 Avoiding double counting

Another claim made by recent publications about the path-exchange method is that it "*avoids double-counting*" (Lenzen & Crawford, 2009, Sec. 4) as a result of "*exchange by definition*" (Lenzen & Crawford, 2009, Sec. 2.1). This refers to the step of the path-exchange method that replaces some sectoral nodes with process nodes, leaving no "*ambivalence*" or double flows in these pathways.

However, this is another misconception about the path-exchange method. It does not somehow inherently avoid the problem of double counting. Instead, it simply employs the well-established binary double-counting correction method at the graph-level. As an example, consider a system illustrated in Fig. 5.

Here, we again consider an arbitrary third order path of the sectoral system:

$$b_{B_4}^S a_{B_4A_3}^S a_{A_3B_2}^S a_{B_2A_1}^S f_A^S \tag{37}$$

Note that according to the legend in Fig. 1, the integer subscripts here indicate the position of the node in the supply chain. As indicated in Fig. 5, specific information on two processes (1,2) is available. According to Sect. 3.1, the path is therefore altered by the path-exchange method to

$$b_{B_4}^S a_{B_4A_3}^S a_{A_3B_2}^S a_{2_21_1}^S f_1^P = \tag{38}$$

$$b_{B_4}^S a_{B_4A_3}^S c_{A_32_2}^U a_{2_21_1}^S f_1^P \tag{39}$$

Note that here only the coefficient $a_{B_2A_1}^S$ was changed, but not $a_{B_4A_3}^S$.

The system of Fig. 5 can be represented through a hybrid technical coefficient matrix $\mathbf{A}_H$ and a hybrid environmental burden coefficient vector $\vec{B}$.

$$\mathbf{A}_H = \begin{array}{c} \\ 1 \\ 2 \\ A \\ B \end{array} \begin{array}{c} \begin{array}{cccc} 1 & 2 & A & B \end{array} \\ \left[\begin{array}{cc|cc} 0 & 0 & 0 & 0 \\ a_{21}^P & 0 & 0 & 0 \\ \hline 0(def!) & c_{A2}^U = a_{AB}^S & a_{AA}^S & a_{AB}^S \\ 0(DC!) & 0(def!) & a_{BA}^S & a_{BB}^S \end{array}\right] \end{array} \tag{40}$$

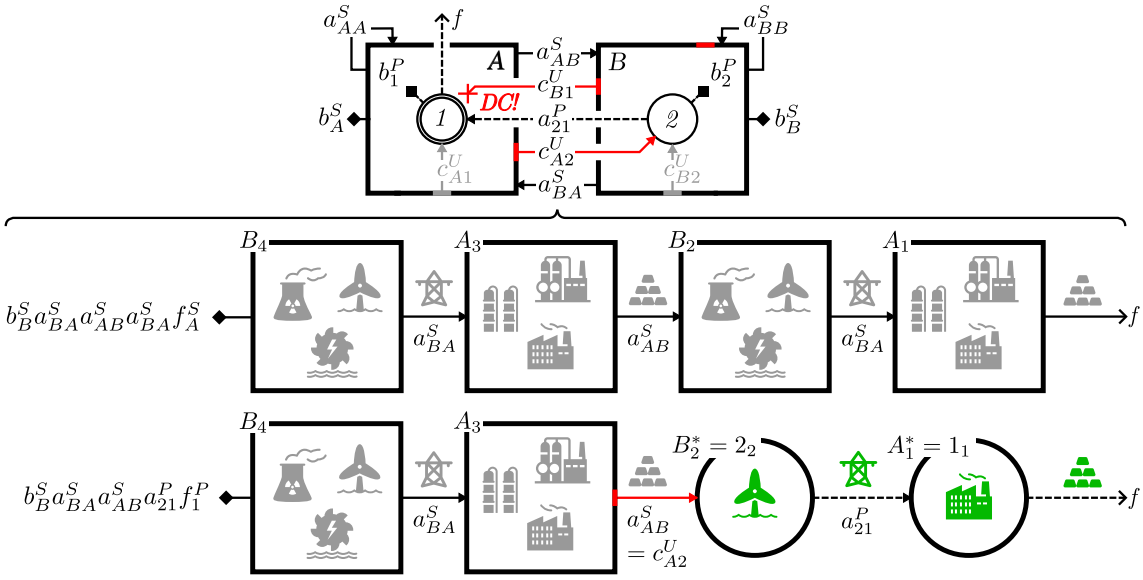

Fig. 5 Top: A simple example system consisting of two sectors (A, B) and two processes (1,2), taken the larger system in Fig. 1. For the corresponding hybrid matrix, compare Eq. (56). Note that the two upstream flows c_{A1}^U and c_{B2}^U are not considered in the hybrid matrix for reasons of simplicity and are therefore shown in grey and denoted 0(*def!*) in the matrix. As indicated by the line-style of the two red "upstream flow" arrows, they have been deduced from the underlying sectoral system. The resulting instance of double-counting is marked "DC!". As indicated by the terminating "X", flow c_{B1}^U is removed completely, therefore constituting binary double counting correction. For a legend of the diagrammatic notation, compare the right panel of Fig. 1. Bottom: Two example paths of the system: $b_2^P a_{21}^P f_1^P$ and $b_B^S a_{BA}^S a_{AB}^S a_{21}^P f_1^P$

$$\vec{B}_H^T = \begin{array}{cccc} 1 & 2 & A & B \\ \end{array} \begin{bmatrix} b_1^P & b_2^P & b_A^S & b_B^S \end{bmatrix} \tag{41}$$

As we can see from Eq. (56), the upstream flow c_{B1}^U into process 1 has been removed, because there is already a process flow a_{21}^P into process 1. This is the definition of binary double-counting correction. In the matrix this is indicated through "0(*DC*!)". Note also that as described in Fig. 5, the two upstream flows c_{A1}^U and c_{B2}^U are not considered in the hybrid matrix for reasons of simplicity and are therefore denoted 0(*def*!).

To *trace the supply chain paths* of this system, we now conduct a structural path analysis, following the description in Sect. 2.4. In the governing equation of environmentally extended input–output analysis, the environmental burden e associated with a final demand vector $\vec{f}_H$ can be expressed as

$$e = \vec{B}_H^T (\mathbf{I} - \mathbf{A}_H)^{-1} \vec{f}_H \tag{42}$$

The first part of this equation is known as the multiplier vector $\vec{m}$

$$\vec{m} = \vec{B}^T (\mathbf{I} - \mathbf{A})^{-1} \tag{43}$$

Using the power series expansion of a matrix inverse

$$(\mathbf{I} - \mathbf{A}_H)^{-1} = \mathbf{I} + \mathbf{A}_H + \mathbf{A}_H^2 + \dots \tag{44}$$

we can expand the multiplier vector of Eq. (43). In our example, we consider the case where the functional unit is the output of process 1, as indicated in Fig. 5. The final demand vector is therefore simply

$$\vec{f}_H = \begin{array}{c} 1 \\ 2 \\ A \\ B \end{array} \begin{bmatrix} 1 \\ 0 \\ 0 \\ 0 \end{bmatrix} \tag{45}$$

According to Eqs. (42) and (43), in this case the environmental burden e can be written as

$$e = \vec{m} \vec{f}_H \tag{46}$$

$$e = m_1 \tag{47}$$

and the power series expansion can be written as

$$m_1 = b_1^P + \sum_{j=1}^{4} b_j^H a_{j1}^H + \sum_{j=1}^{4} \sum_{k=1}^{4} b_k^H a_{kj}^H a_{j1}^H + \sum_{l=1}^{4} \sum_{j=1}^{4} \sum_{k=1}^{4} b_l^H a_{lk}^H a_{kj}^H a_{j1}^H + \dots \tag{48}$$

We can now take a single third-order pathway from this expansion

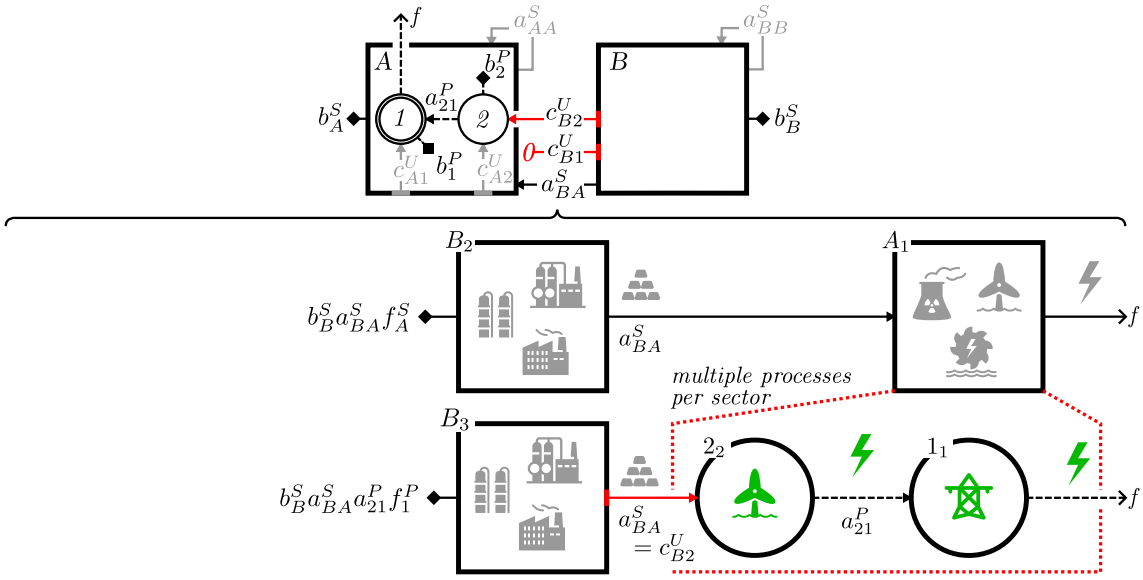

Fig. 6 Top: A simple example system consisting of two sectors (A,B) and two processes (1,2). Note that this example system differs from the larger system in Fig. 1. For the corresponding hybrid matrix, compare Eq. (57). Here, we assume that sector A produces electricity, while sector B supplies metals. In this example, sector A includes electricity production as well as electricity grid distribution. Note that in this example, we know the upstream flow c^U_{B1} to be zero. Note also that the flows c^U_{A1}, c^U_{A2}, a^S_{AA} and a^S_{BB} are not considered in the hybrid matrix for reasons of simplicity and are therefore shown in grey and denoted 0(*def!*) in the matrix. For a legend of the diagrammatic notation, compare the right panel of Fig. 1. Bottom: Two example paths of the system: $b^S_B a^S_{BA} f^S_A$ and $b^S_B a^S_{BA} a^P_{21} f^P_1$

$$b^H_4 a^H_{43} a^H_{32} a^H_{21} = b^S_B a^S_{BA} c^U_{A2} a^P_{21} \tag{49}$$

This path is visualized in the bottom Sect. of Fig. 5. As we can see, the binary double-counting correction in Eq. (56) ensures that no flow from sector B to process 1 is added. However, it does not impede the flow between sectors B and A elsewhere in the supply chain.

3.3.4 Matching paths of varying length

Another claim about the *path-exchange method* is that unlike matrix-based methods for HLCA, it is able to *match paths of different lengths*, as illustrated in Crawford et al. (2017, Fig. 2, "Case B"). This means that for a single sectoral technical coefficient a^S_{ij} the method is able to substitute multiple process coefficients $a^P_{kl} a^P_{lm} \ldots$ in a path.

However, this is another misconception about the path-exchange method. Matrix-based methods, such as the tiered hybrid method, can combine paths of arbitrary length just as well. As an example, consider a system illustrated in Fig. 6.

Here, we consider a first order path of the sectoral system:

$$b^S_B a^S_{BA} f^S_A \tag{50}$$

As indicated in Fig. 6, specific information on two processes (1,2) is available. Both processes are contained within the same sector. However, from the relation between sectors A and B alone, there is no objective way of inferring the share of upstream inputs from sector B into process 2 and process 1. In this example, for reasons of simplicity, we therefore assume that only process 2 receives upstream input from the sectoral system and therefore $c^U_{B1} = 0$. This could be because process 1 is a distribution or market process, or because we know its inputs to be complete or because it is chosen as a simplifying assumption. This corresponds to both the example used by Crawford et al. (2017, Fig. 2, case "B") and the assumption made by Agez et al. (2020, Sec. 3.2.3). According to Sect. 3.1, the path is therefore altered by the path-exchange method to

$$b^S_B c^U_{B2} a^P_{21} f^P_1 = b^S_B a^S_{BA} a^P_{21} f^P_1 \tag{51}$$

The system of Fig. 6 can again be represented through a hybrid technical coefficient matrix $\mathbf{A}_H$ and a hybrid environmental burden coefficient vector $\vec{B}$. First, the *uncorrected* upstream cut-off matrix $\mathbf{C}^{uncorr}_U$ can be constructed according to Eq. (5):

$$\mathbf{C}^{uncorr}_U = \mathbf{A}_S \mathbf{H} = \begin{array}{c} \\ A \\ B \end{array} \begin{array}{c} \begin{array}{cc} 1 & 2 \end{array} \\ \begin{bmatrix} 0(def!) & 0(def!) \\ c^U_{B1} = a^S_{BA} & c^U_{B2} = a^S_{BA} \end{bmatrix} \end{array} \tag{52}$$

Now, the *corrected* upstream cut-off matrix $\mathbf{C_U}$ can be constructed according to Eq. (18)

$$\mathbf{C}_U^{corr} = \mathbf{\Theta}_{DC} \otimes \mathbf{\Theta}_{K0} \otimes \mathbf{C}_U^{uncorr} \tag{53}$$

$$= \begin{array}{c} \\ A \\ B \end{array} \begin{array}{c} \begin{array}{cc} 1 & 2 \end{array} \\ \begin{bmatrix} 1 & 1 \\ 1 & 1 \end{bmatrix} \end{array} \otimes \begin{array}{c} \\ A \\ B \end{array} \begin{array}{c} \begin{array}{cc} 1 & 2 \end{array} \\ \begin{bmatrix} 1 & 1 \\ 0 & 1 \end{bmatrix} \end{array} \otimes \begin{array}{c} \\ A \\ B \end{array} \begin{array}{c} \begin{array}{cc} 1 & 2 \end{array} \\ \begin{bmatrix} 0(def!) & 0(def!) \\ c_{A2}^U & c_{B2}^U \end{bmatrix} \end{array} \tag{54}$$

$$= \begin{array}{c} \\ A \\ B \end{array} \begin{array}{c} \begin{array}{cc} 1 & 2 \end{array} \\ \begin{bmatrix} 0 & 0 \\ 0 & c_{B2}^U \end{bmatrix} \end{array} \tag{55}$$

This allows us to construct the hybrid matrix $\mathbf{A}_H$ and the hybrid environmental burden coefficient vector $\vec{B}$:

$$\mathbf{A}_H = \begin{array}{c} \\ 1 \\ 2 \\ A \\ B \end{array} \begin{array}{c} \begin{array}{cccc} 1 & 2 & A & B \end{array} \\ \left[\begin{array}{cc|cc} 0 & 0 & 0 & 0 \\ a_{21}^P & 0 & 0 & 0 \\ \hline 0(def!) & 0(def!) & 0(def!) & 0 \\ 0 & c_{B2}^U = a_{BA}^S & a_{BA}^S & 0(def!) \end{array}\right] \end{array} \tag{56}$$

$$\vec{B}_H^T = \begin{array}{c} \begin{array}{cccc} 1 & 2 & A & B \end{array} \\ \begin{bmatrix} b_1^P & b_2^P & b_A^S & b_B^S \end{bmatrix} \end{array} \tag{57}$$

The power series expansion of this matrix can now be written as

$$m_1 = b_1^P + \sum_{j=1}^{4} b_j^H a_{j1}^H + \sum_{j=1}^{4} \sum_{k=1}^{4} b_k^H a_{kj}^H a_{j1}^H + \ldots \tag{58}$$

We can now take the second-order pathway from this expansion, which corresponds to the path in Eq. (51)

$$b_4^H a_{42}^H a_{21}^H = b_B^S c_{B2}^U a_{21}^P = b_B^S a_{BA}^S a_{21}^P \tag{59}$$

As we can see, this is equivalent to the path returned by the path-exchange algorithm Eq. (51). In practice, this approach has already been demonstrated by Agez et al. (2020, Sect. 3.2.3), who have selectively hybridized processes of the Ecoinvent database.

3.4 Limitations

In the structural path analysis of Eq. (23), the upper bound for the number of possible paths of order n for a system of N economic sectors is N^n. This holds true only if every node in the system is connected to every other node. Note that the exact number of possible paths in a more realistic system can only be computed by means of the adjacency matrix of the hybrid system, which we describe in the Supplementary Information. The equation for the upper bound of paths is frequently used incorrectly when referring to the number of possible paths (Baboulet, 2009, p. 25; Lenzen, 2002b, Footnote 1; 2009, p. 8252; Treloe, 1997, p. 378). Even limiting the investigation of paths to an arbitrary maximum path order may therefore prove computationally prohibitive, depending on the size of the system. To mitigate this issue, pruning techniques are used by practitioners, disregarding paths below a threshold contribution to overall impact (Hong et al., 2016, Sec. 2.3). These pruning techniques can be effective, reducing the number of relevant paths to a number much smaller than the total number of paths (Lenzen, 2007). However, as practitioners note, a specific cut-of values is often chosen "*(...) for convenience, and because it was expected that it would provide a sufficiently detailed model to be used as the basis for an I–O-based hybrid analysis without providing too many energy paths*" (Treloar et al., 2001). And since most studies use systems of different size and scope, "*(...) subjective choices are unavoidable during the computational process*" (Hong et al., 2016).

One study combined the input–output table of the United Kingdom with the *Ecoinvent* database using the path-exchange method to investigate emissions of wind power. It was found that 23% of emissions were associated with paths that each contributed less than 0.034% (Wiedmann et al., 2011, Supplement Sec. 5). As other authors observed, "*These small paths are often neglected in SPA studies* (Lenzen, 2002a; Norris, 2002; Treloar et al., 2001)" (Peters & Hertwich, 2006a). One interesting example from a specific case study was provided: "*environmental impacts of electricity production in developing countries arise from numerous small contributions and not a few single, but large, contributions*" (Peters & Hertwich, 2006a). Any method working at the path-level is therefore subject to the above limitations. This is also the case for the path-exchange method for HLCA.

In addition, the error introduced by cutting of paths cannot be readily quantified. Error here refers to the missing amount of upstream input from the sectoral system into the process system, which is not accounted for due to the path cutoffs inherent to the path-exchange method. Since the number of possible paths grows exponentially with the size of the hybrid system, the traversal of these paths must be cut off after a specific threshold t of contribution to total emissions, or a specific path length d. In practice, authors have used varying parameters, depending on the study context $d = 5/t = 0.005 - 0.01\%$ (Hong et al., 2016), $d = 6/t = 5 - 1\%$ (Norris, 2002), $d = 8/t = 0.001\%$ (Peters & Hertwich, 2006b), $d = 9/t = 0.001\%$ (Peters & Hertwich, 2006a) or $d = 10/t = 0.1\%$ (Font Vivanco et al., 2019).

3.5 Mathematical definition of the path-exchange algorithm

Here, we provide the first ever formal mathematical description of the path-exchange algorithm. In Sect. 4, we will use this description to prove that the path-exchange method is equivalent to the tiered hybrid method. To show this, we will simply perform a structural path analysis on a matrix-based hybrid system and compare it to the formal description below.

As described in Sect. 3.1, a structural path analysis of the sectoral system and the process system is first performed. The key to a formal mathematical description of the algorithm is now the description of the logic it employs to add only some of the nodes of the sectoral system to the process system. The resulting paths then contain only the "*mutually exclusive nodes*" often cited as the distinction of the path-exchange method (Crawford et al., 2017, Sec. 2; 2018, Sec. 4; Stephan et al., 2019, Sec. 2.1).

As we can see in Fig. 3, only those paths from the sectoral SPA for which there is no corresponding process path are added. Consider, for instance, all first-order paths into sector A in the example system of Fig. 1:

$$\sum_{j=1}^{N} b_j^S a_{jS(1)}^S = b_D^S a_{DA}^S + b_B^S a_{BA}^S \tag{60}$$

Here, the index subscript notation $S(1)$ refers to the sector which contains process 1. In the example system of Fig. 1, $S(1) = A$ and therefore the sum $\sum_{j=1}^{N} a_{jS(1)}^S = a_{DA} + a_{BA}$.

First, we must determine whether there is any process with flows to process 1 originating in sector B. As we can see from Fig. 1, process path a_{21}^P corresponds to sectoral path a_{BA}^S. Under the definition of the algorithm, this sectoral path must therefore not be added.

Again availing ourselves of the Iverson bracket notation Eq. (11) and the definition of the concordance matrix Eq. (8), we can write this condition as

$$\left[\sum_{i=1}^{M} h_{Bi} a_{i1}^P \stackrel{?}{=} 0\right] = \begin{cases} 1 & \text{if no process flow } a^P \text{ to process 1} \\ & \quad \text{originates in sector } B \\ 0 & \text{else} \end{cases} \tag{61}$$

The formal definition of the algorithm is now provided in Eq. (62). As we can see, the condition of Eq. (61) is used whenever sectoral paths are appended to a process path.

$$\begin{aligned} m_{1,pxc} = {} & \underbrace{\sum_{j=1}^{M} b_j^P \delta_{j1}}_{P:0^{\text{th}}-\text{order}} + \underbrace{\sum_{j=1}^{M} b_j^P a_{j1}^P}_{P:1^{\text{st}}-\text{order}} + \underbrace{\sum_{j=1}^{N} b_j^S \left[\sum_{x=1}^{M} h_{jx} a_{x1}^P \stackrel{?}{=} 0\right] a_{jS(1)}^S}_{S:1^{\text{st}}-\text{order}} + \underbrace{\sum_{k=1}^{M}\sum_{j=1}^{M} b_k^P a_{kj}^P a_{j1}^P}_{P:2^{\text{nd}}-\text{order}} \\ & + \underbrace{\sum_{k=1}^{N}\sum_{j=1}^{M} b_k^S \left[\sum_{x=1}^{M} h_{kx} a_{xj}^P \stackrel{?}{=} 0\right] a_{kS(j)}^S a_{j1}^P}_{S/P:2^{\text{nd}}-\text{order}} + \underbrace{\sum_{k=1}^{N}\sum_{j=1}^{N} b_k^S a_{kj}^S \left[\sum_{x=1}^{M} h_{jx} a_{x1}^P \stackrel{?}{=} 0\right] a_{jS(1)}^S}_{S:2^{\text{nd}}-\text{order}} \\ & + \underbrace{\sum_{l=1}^{M}\sum_{k=1}^{M}\sum_{j=1}^{M} b_l^P a_{lk}^P a_{kj}^P a_{j1}^P}_{P:3^{\text{rd}}-\text{order}} + \underbrace{\sum_{l=1}^{N}\sum_{k=1}^{N}\sum_{j=1}^{N} b_l^S a_{lk}^S a_{kj}^S \left[\sum_{x=1}^{M} h_{jx} a_{x1}^P \stackrel{?}{=} 0\right] a_{jS(1)}^S}_{S:3^{\text{rd}}-\text{order}} \\ & + \underbrace{\sum_{l=1}^{N}\sum_{k=1}^{N}\sum_{j=1}^{M} b_l^S a_{lk}^S \left[\sum_{x=1}^{M} h_{kx} a_{xj}^P \stackrel{?}{=} 0\right] a_{kS(j)}^S a_{j1}^P + \sum_{l=1}^{N}\sum_{k=1}^{M}\sum_{j=1}^{M} b_l^S \left[\sum_{x=1}^{M} h_{lx} a_{xk}^P \stackrel{?}{=} 0\right] a_{lS(k)}^S a_{kj}^P a_{j1}^P}_{S/P:3^{\text{rd}}-\text{order}} + \ldots \end{aligned} \tag{62}$$

4 Proof of mathematical equivalency with matrix method

Despite previous reports in literature, the path-exchange method for HLCA does not constitute a distinct mathematical approach for integrating process and sectoral data. This has not been observed previously, as is evident by the treatment of this method in recent review publications (Crawford et al., 2018; Islam et al., 2016). In this section, we show the mathematical equivalence between the path-exchange method we formally defined in Sect. 2.4 and the matrix method we introduced in Sect. 2.3.

More specifically, we show the equivalence of the matrix method with binary double-counting correction where $\mathbf{C}_D = 0 \wedge \mathbf{C}_U \neq 0$.

Starting from the governing equation of the integrated hybrid matrix method in Eq. (4) and the governing equation of the path-exchange hybrid method in Eq. (24), we need to show that

$$\begin{aligned}\vec{e}_{H(pxc)} &= \mathrm{PXC}(\mathbf{B}_S(\mathbf{I}-\mathbf{A}_S)^{-1})\vec{f}_P \\ &= \mathrm{PXC}(\mathbf{B}_S(\mathbf{I}+\mathbf{A}_S+(\mathbf{A}_S)^2+(\mathbf{A}_S)^3+\ldots))\vec{f}_P\end{aligned} \tag{63}$$

$$\vec{e}_{H(mx)} = \begin{pmatrix}\mathbf{B}_P & 0\\ 0 & \mathbf{B}_S\end{pmatrix}\begin{pmatrix}\mathbf{A}_P & 0\\ \mathbf{C}_U^{corr} & \mathbf{I}-\mathbf{A}_S\end{pmatrix}^{-1}\begin{pmatrix}\vec{f}_P\\ 0\end{pmatrix} \tag{64}$$

In order to show the equivalence of Eqs. (63) and (64), we must conduct a structural path analysis of the hybrid matrix in Eq. (64). The trick is to simply split up the row/column index into two indices, which go over $1 \leq i < M$ (processes) and $M \leq i \leq N$ (sectors). Note also that by the definition of the tiered hybrid matrix introduced in Sect. 2.3, the downstream flow matrix is zero and therefore all terms $\sum_{i=1}^{M}\sum_{j=M+1}^{N} a_{ij} = 0$. For convenience, the range of the row/column index combinations (i, j) is shown in Eq. (65):

$$\left[\begin{array}{c|c} 1 \leq i \leq M & 1 \leq i \leq M \\ 1 \leq j \leq M & M < j \leq N \\ \hline M < i \leq N & M < i \leq N \\ 1 \leq j \leq M & M < j \leq N \end{array}\right] \tag{65}$$

Note that in the upstream quarter of the matrix, where M the binary double-counting correction method from Eq. (12) must be applied. This means, that instead of the term

$$\sum_{i=M+1}^{N}\sum_{j=1}^{M} a_{ij}^H \tag{66}$$

in the decomposition, we get

$$\sum_{i=M+1}^{N}\sum_{j=1}^{M}\left[\sum_{k=1}^{M} h_{ik}a_{kj}^P \stackrel{?}{=} 0\right]a_{ij}^H \tag{67}$$

Splitting up the indices, we can write:

$$\begin{aligned}
m_{1,mx} = {} & \underbrace{\sum_{j=1}^{M} b_j^H\delta_{j1} + \cancel{\sum_{j=M+1}^{N} b_j^H\delta_{j1}}}_{H:0^{\text{th}}-\text{order}} + \underbrace{\sum_{j=1}^{M} b_j^H\, a_{j1}^H + \sum_{j=M+1}^{N} b_j^H\left[\sum_{x=1}^{M} h_{jx}a_{x1}^P \stackrel{?}{=} 0\right] a_{j1}^H}_{H:1^{\text{st}}-\text{order}} \\
& + \underbrace{\sum_{k=1}^{M}\sum_{j=1}^{M} b_k^H\, a_{kj}^H a_{j1}^H + \sum_{k=M+1}^{N}\sum_{j=1}^{M} b_k^H\left[\sum_{x=1}^{M} h_{kx}a_{xj}^P \stackrel{?}{=} 0\right] a_{kj}^H\, a_{j1}^H + \sum_{k=M+1}^{N}\sum_{j=M+1}^{N} b_k^H\, a_{kj}^H\left[\sum_{x=1}^{M} h_{jx}a_{x1}^P \stackrel{?}{=} 0\right] a_{j1}^H}_{H:2^{\text{nd}}-\text{order}} \\
& + \underbrace{\sum_{l=1}^{M}\sum_{k=1}^{M}\sum_{j=1}^{M} b_l^H\, a_{lk}^H a_{kj}^H a_{j1}^H + \sum_{j=M+1}^{N}\sum_{k=M+1}^{N}\sum_{l=M+1}^{N} b_l^H\, a_{lk}^H a_{kj}^H\left[\sum_{x=1}^{M} h_{jx}a_{x1}^P \stackrel{?}{=} 0\right] a_{j1}^H}_{H:3^{\text{rd}}-\text{order}} \\
& + \underbrace{\sum_{l=M+1}^{N}\sum_{k=M+1}^{N}\sum_{j=1}^{M} b_l^H\, a_{lk}^H\left[\sum_{x=1}^{M} h_{kx}a_{xj}^P \stackrel{?}{=} 0\right] a_{kj}^H\, a_{j1}^H + \sum_{l=M+1}^{N}\sum_{k=1}^{M}\sum_{j=1}^{M} b_l^H\left[\sum_{x=1}^{M} h_{lx}a_{xk}^P \stackrel{?}{=} 0\right] a_{lk}^H\, a_{kj}^H a_{j1}^H}_{H:3^{\text{rd}}-\text{order}} + \ldots
\end{aligned} \tag{68}$$

Comparing this to Eq. (62), we find all paths to be equal. □

This means that the power-series expansion of the system in Eq. (63) of a hybrid matrix like Eq. (64), which is constructed according the definition of the *tiered hybrid* method with binary double-counting correction, is equivalent to the paths returned by the *path-exchange hybrid* method.

5 Example

We illustrate the proof of mathematical equivalency from Sect. 4 by explicitly writing out all possible paths up to order 2 for the example system in Fig. 1. To simplify the equations, we assume the case of only a single environmental burden of interest (eg. carbon dioxide emissions). In addition, we place only a single unit of final demand on process 1, which is contained in sector A through a final demand vecto

$$\vec{f}_P = \begin{bmatrix} 1 \\ 0 \end{bmatrix}$$

Using the definition of the path-exchange algorithm we introduced in Eq. (62) of Sect. 3.5, for paths up to order 2, the governing equation of the method can be written as

$$\begin{aligned} \mathrm{SPA}(S) \sim & b_A^S \\ & + \underline{b_A^S a_{AA}^S} + b_B^S a_{BA}^S + \underline{b_D^S a_{DA}^S} \\ & + \underline{b_A^S a_{AA}^S a_{AA}^S} + \underline{b_A^S a_{AB}^S} a_{BA}^S \\ & + \underline{b_B^S a_{BA}^S a_{AA}^S} + \underline{b_B^S a_{BB}^S} a_{BA}^S \\ & + \underline{b_C^S a_{CB}^S} a_{BA}^S + \underline{b_C^S a_{CD}^S a_{DA}^S} \\ & + \underline{b_D^S a_{DD}^S a_{DA}^S} + \underline{b_D^S a_{DA}^S a_{AA}^S} \end{aligned} \tag{70}$$

$$\mathrm{SPA}(P) \sim b_1^P + b_2^P a_{21}^P \tag{71}$$

The path-exchange algorithm now goes to work and returns:

$$\begin{aligned} e_{1,H(pxc)} \sim & b_1^P \\ & + \underline{b_A^S a_{AA}^S} + b_2^P a_{21}^P + \underline{b_D^S a_{DA}^S} \\ & + \underline{b_A^S a_{AA}^S a_{AA}^S} + \underline{b_A^S a_{AB}^S} a_{21}^P \\ & + \underline{b_B^S a_{BA}^S a_{AA}^S} + \underline{b_B^S a_{BB}^S} a_{21}^P \\ & + \underline{b_C^S a_{CB}^P} a_{21}^P + \underline{b_C^S a_{CD}^S a_{DA}^S} \\ & + \underline{b_D^S a_{DD}^S a_{DA}^S} + \underline{b_D^S a_{DA}^S a_{AA}^S} \end{aligned} \tag{72}$$

Now, we construct the hybrid matrix of the example. This will allow us to perform a structural path analysis on the hybrid matrix and compare it to Eq. (72).

$$\mathbf{A}_H = \begin{array}{c} \\ 1 \\ 2 \\ A \\ B \\ C \\ D \end{array} \begin{array}{c} \begin{array}{cccccc} 1 & 2 & A & B & C & D \end{array} \\ \left[\begin{array}{cc|cccc} 0 & 0 & 0 & 0 & 0 & 0 \\ a_{21}^P & 0 & 0 & 0 & 0 & 0 \\ \hline c_{A1}^U = a_{AA}^S & c_{A2}^U = a_{AB}^S & a_{AA}^S & a_{AB}^S & 0 & 0 \\ c_{B1}^U = 0(DC!) & c_{B2}^U = a_{BB}^S & a_{BA}^S & a_{BB}^S & a_{BC}^S & 0 \\ 0 & c_{C2}^U = a_{CB}^S & 0 & a_{CB}^S & a_{CC}^S & a_{CD}^S \\ c_{D1}^U = a_{DA}^S & 0 & a_{DA}^S & 0 & a_{DC}^S & a_{DD}^S \end{array}\right] \end{array}$$

$$e_{1,H(pxc)} \sim \mathrm{PXC}\left\{ \sum_{j=1}^{N=4} b_j \left(\delta_{j1} + a_{j1}^S + \sum_{k=1}^{N=4} a_{jk}^S a_{k1}^S \right) \right\} \tag{69}$$

For illustrative purposes, we first separately write out the results of the structural path analyses of the process system and the sectoral system. The sub-paths of the sectoral system for which there is no correspondence with any sub-paths of the process system are underlined for better visibility.

We can now perform the structural path analysis on this matrix:

$$e_{1,H(mx)} \sim \sum_{j=1}^{M+N=2+4} b_j^H \left(\delta_{j1} + a_{j1}^H + \sum_{k=1}^{M+N=2+4} a_{jk}^H a_{k1}^H \right) \tag{73}$$

$$\begin{aligned} = & b_1^H \\ & + b_2^H a_{21}^H + b_3^H a_{31}^H + b_6^H a_{61}^H \\ & + b_3^H a_{32}^H a_{21}^H + b_4^H a_{42}^H a_{21}^H + b_5^H a_{52}^H a_{21}^H \\ & + b_3^H a_{33}^H a_{31}^H + b_4^H a_{43}^H a_{31}^H + b_6^H a_{63}^H a_{31}^H \\ & + b_5^H a_{56}^H a_{61}^H + b_6^H a_{66}^H a_{61}^H \end{aligned} \tag{74}$$

$$
\begin{aligned}
&= b_1^P \\
&\quad + b_2^P a_{21}^P + b_A^S c_{A1}^U + b_D^S c_{D1}^U \\
&\quad + b_A^S c_{A2}^U a_{21}^P + b_B^S c_{B2}^U a_{21}^P + b_C^S c_{C2}^U a_{21}^P \\
&\quad + b_A^S a_{AA}^S c_{A1}^U + b_B^S a_{BA}^S c_{A1}^U + b_D^S a_{DA}^S c_{A1}^U \\
&\quad + b_C^S a_{CD}^S c_{D1}^U + b_D^S a_{DD}^S c_{D1}^U \qquad (75) \\
&= b_1^P \\
&\quad + b_2^P a_{21}^P + b_A^S a_{AA}^S + b_D^S a_{DA}^S \\
&\quad + b_A^S a_{AB}^S a_{21}^P + b_B^S a_{BB}^S a_{21}^P + b_C^S a_{CB}^P a_{21}^P \\
&\quad + b_A^S a_{AA}^S a_{AA}^S + b_B^S a_{BA}^S a_{AA}^S + b_D^S a_{DA}^S a_{AA}^S \\
&\quad + b_C^S a_{CD}^S a_{DA}^S + b_D^S a_{DD}^S a_{DA}^S \qquad (76)
\end{aligned}
$$

Comparing Eqs. (72) and (76), after a re-ordering of terms, we find them to be equal. Note that the paths listed in these equations can be also visually traced in the diagrammatic representation of the example system in Fig. 1.

6 Computational intensity and possible mitigation

As shown in Eq. (23), the path-exchange method for HLCA must add up environmental burdens b_i along pathways. As we have discussed in Sect. 3.4, the number of paths grows exponentially with the size of the system. What is more, the number of paths required to obtain reasonable coverage of total emissions depends strongly on the system under investigation (Lenzen, 2007). Generally, a large enough number paths therefore is required to obtain a high degree of emissions coverage, which in life cycle assessment is essential in the context of decision-making (Lenzen, 2002b).

In Panel A of Fig. 7, we show that for the simple case of a single-region input–output table of only 114 sectors, computation on current high-end consumer hardware may for some sectors take 2 h while covering only 50% of total emissions in the computed paths. While it is evident that for some sectors the structural path analysis does indeed converge quickly, for others the convergence behavior is very poor. Even computational optimizations such as parallelization cannot compensate for poor convergence behavior. In Panel B of Fig. 7 on the other hand, we show that the exact solution of a hybrid system system combining Ecoinvent and the Exiobase multi-regional input–output table of a combined 30′800 rows/columns can be computed *exactly* within ∼ 3 min on the same hardware. For these solutions, we found excellent numerical stability to within floating-point precision for all calculations.

As evident from Eq. (23) and Fig. 7, it is by definition impossible to use only a path-based method to obtain the complete environmental burden e_i associated with some final demand f_i. Stephan in 2023 through version 2 of the `pyspa` package [Stephan, 2023, Readme, Line 40] proposed an approach to alleviate this inherent shortcoming by adding the *residual* to a set of paths. This method has thus far not been described in literature.

The *residual* of a path-based life cycle assessment can be defined in relation to a cutoff as the amount of environmental burden not covered by the paths considered. For the case of a cutoff after paths of length $l = 1$, the residual would be:

$$m_i = b_i + \sum_{j=1}^{N} b_j a_{ji} + residual \qquad (77)$$

$$residual = \sum_{k=1}^{N}\sum_{j=1}^{N} b_k a_{kj} a_{ji} + \sum_{l=1}^{N}\sum_{k=1}^{N}\sum_{j=1}^{N} b_l a_{lk} a_{kj} a_{ji} + \ldots \qquad (78)$$

As an example, consider a system illustrated in Fig. 8.

Here, we assume that, for reasons of computational intensity, we need to cut off all paths after length one. This leaves us with the power series expansion of Eq. (23) shortened to

$$m_i = b_i + \sum_{j=1}^{N} b_j a_{ji} + residual \qquad (79)$$

The *residual* of this cutoff can be computed by means of the a matrix method as described in Sect. 2.3

$$m_i = b_i + \sum_{j=1}^{N} b_j a_{ji} + \sum_{j=1}^{N} \mathbf{B}(\mathbf{I} - \mathbf{A})^{-1} a_{ji} \vec{1}_j \qquad (80)$$

where $\vec{1}_i$ is the standard basis vector, which is defined as $(\vec{1}_i)_j = \delta_{ij}$.

As shown in Fig. 8, individual path coefficients in Eq. (80) can, of course, now be exchanged again as described in Sect. 2.4. This approach, which now captures 100% of environmental burdens, constitutes a combination of a path-based and a matrix-based method for life cycle assessment. Note that this method postdates all reviewed publications using the path-exchange method listed in Table 2 of the Supplementary Information.

7 Discussion

In Sect. 3.2, we provide a description of the path-exchange method supported by our novel diagrammatic notation introduced in Fig. 1. Following a short historical overview in Sect. 3.2, we show in Sect. 3.3 that the key assumption underlying the motivation for the development of the algorithm was incorrect. We list in detail multiple misconceptions about the purported uniqueness of the method and show

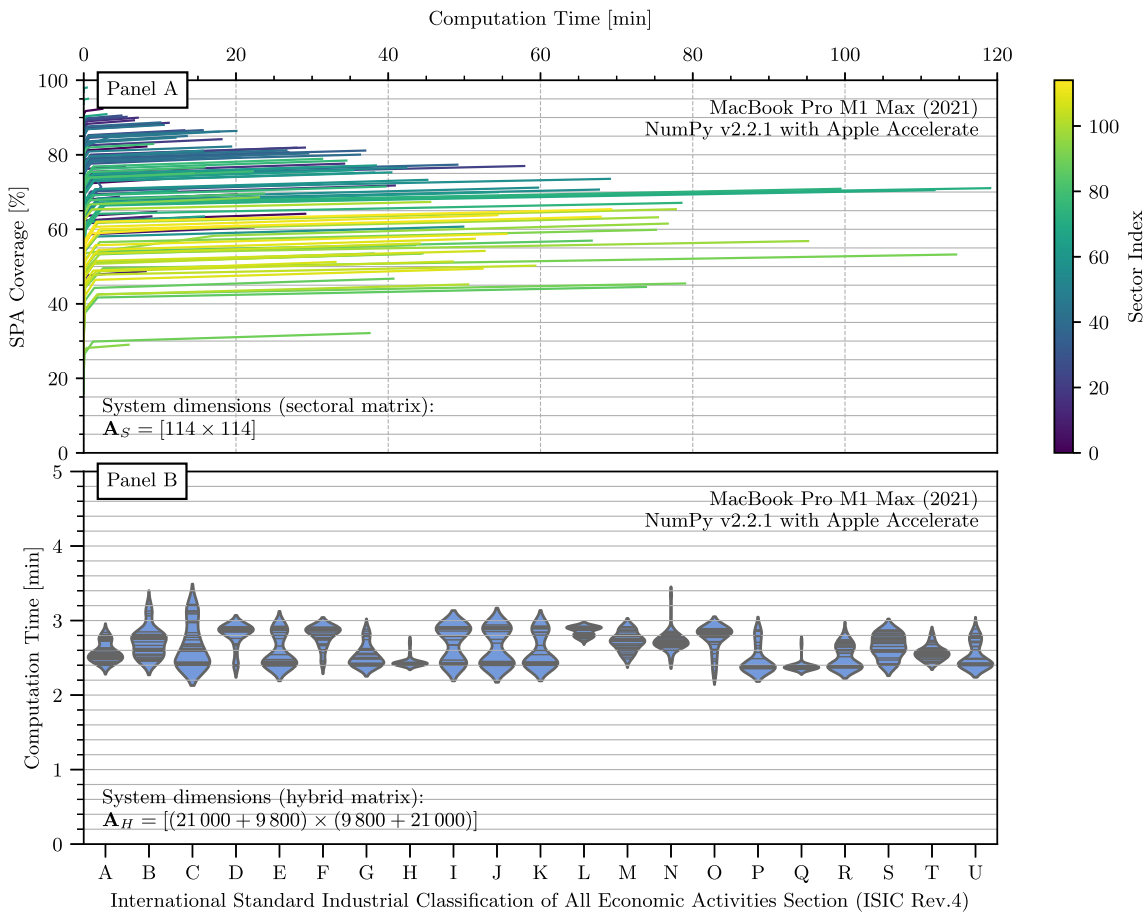

Fig. 7 Computational intensity of generating individual pathways for the path-exchange (graph-based) hybrid life cycle method and the tiered (matrix-based) life hybrid life cycle method. Panel **A** Convergence behavior of the environmental burden coverage from a structural path analysis for every sector in the input–output table of Australia. Every line represents a single sector. The maximum path length was set to 20, with the cut-off criteria varied between [0.1%, 0.01%, 0.001%, 0.0001%, 0.00001%]. In general, high SPA coverage in short computation time is desirable. It is evident that the convergence behavior strongly depends on the sector and can vary between > 90% in ∼ 5 min to < 50% in ∼ 2 h on current hardware. Note that this system is two orders of magnitude smaller than the hybrid system of (Panel **B**). Computations were preformed using the `pyspa` (Stephan & Bontinck, 2019) package (v2.4) on a MacBook Pro with an M1 Max CPU and NumPy (v2.2.1). Panel **B** Computation time for the solution of the governing equation of HLCA $e = \mathbf{Q}_H \cdot \mathbf{B}_H \cdot \mathbf{A}_H^{-1} \cdot \vec{f}$ using the `numpy.linalg.solve(a,b)` function. The hybrid matrix was constructed by combining the Ecoinvent technosphere matrix of $\dim(\mathbf{A}_P) = [21'000 \times 21'000]$ and the multi-regional input–output table of the Exiobase 3 database (Stadler et al., 2021) of $\dim(\mathbf{A}_S) = [9'800 \times 9'800]$. A sample of 10 Ecoinvent processes per ISIC section (A–U) was selected at random to serve as final demand. The numerical stability of every solution was checked by repeating the same computation 4 times. For every computation, the solution was found to be stable within the precision of the standard NumPy floating point data type. Note that this system is two orders of magnitude larger than the single-region input–output table of (**A**). Computations were preformed using NumPy v2.2.1 built against the Apple Accelerate BLAS framework on a MacBook Pro with an M1 Max CPU. All underlying data is available in a Zenodo repository (Weinold & Majeau-Bettez, 2025)

how a matrix-based method can solve all relevant edge-cases as well. In Eq. (62) of Sect. 3.5 we then provide a concise mathematical description of the path-exchange method (Crawford et al., 2017; Lenzen & Crawford, 2009; Stephan et al., 2019) for HLCA. This description makes use of a concordance matrix and the Iverson bracket. To our knowledge, no such definition has been provided to date. This is of great importance to base future methodological discussions or operationalizations on a clear, unambiguous mathematical definition.

In order to augment the original visual illustrations of the algorithm provided by the authors in Crawford et al. (2017, Figure 2) and Stephan et al. (2019, Figure 1), a novel diagrammatic illustration of the method is provided in Fig. 3. Finally, in Sect. 4 we show that the path-exchange (=graph-based) method for HLCA is mathematically equivalent to the tiered hybrid (=matrix-based) method for HLCA. The core of the proof is straightforward: A structural path analysis of the hybrid matrix compiled according to the tiered hybrid method is performed. Splitting up the indices of the matrix multiplication in the power-series expansion, it then

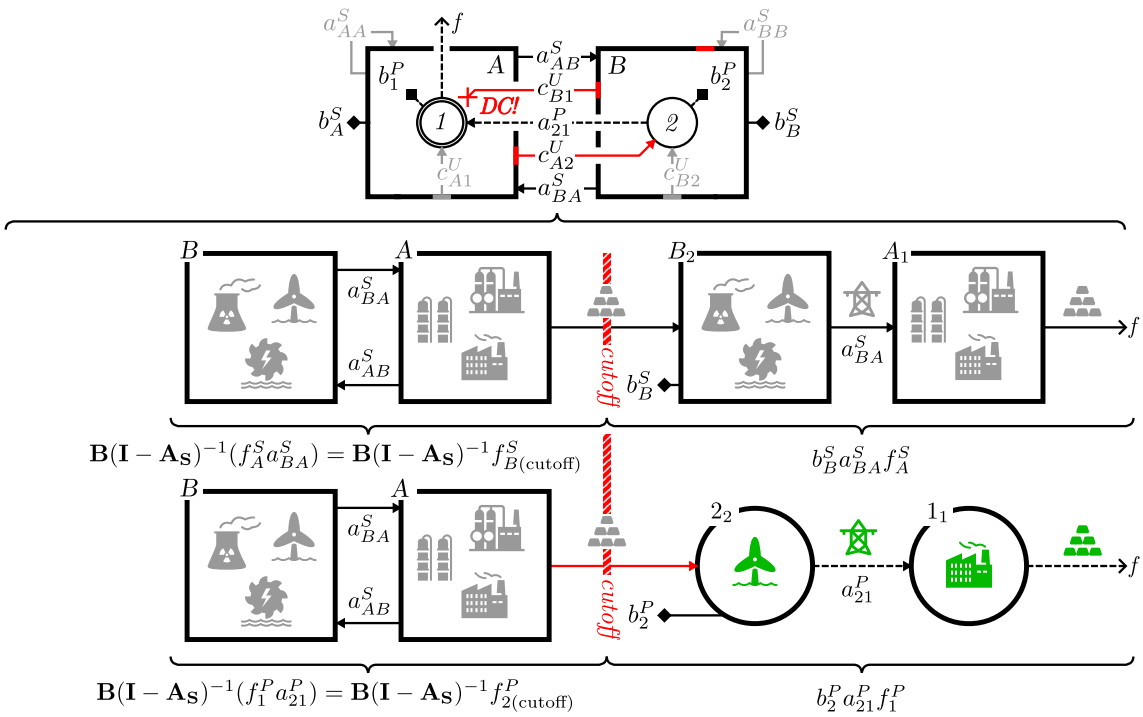

Fig. 8 Top: A simple example system consisting of two sectors (A,B) and two processes (1,2), adapted from the larger system in Fig. 1 as used in Fig. 5. Bottom: Path $b_B^S a_{BA}^S f_A^S$, with a cutoff after length one. Adding all upstream inputs and related burdens to B_2 can be accomplished through the *residual* $\mathbf{B}(\mathbf{I}-\mathbf{A})^{-1} f_{B(\text{cutoff})}^S$ as defined in Eq. (78). Of course, the path coefficients can still be exchanged, for instance to $b_2^P a_{21}^P f_1^P$. The residual in this case is added in the same way. For a legend of the diagrammatic notation, compare the right panel of Fig. 1

becomes clear that the resulting paths are equivalent to those of the path-exchange method. An explicit example based on the system illustrated in Fig. 1 is provided in Sect. 5.

In Sect. 6, we show how the inherent computational intensity of graph-based methods requires *computing the residual* to avoid missing a large share of overall environmental burdens when adding individual paths.

Notably, from Sects. 3.3 and 4, we can see that the frequently invoked argument of the path-exchange method working on "*mutually exclusive paths*" (Crawford et al., 2017; Stephan et al., 2019) is not an inherent property of the method. Instead it is a result of the algorithm making implicit use of binary double-counting correction. By extension, the claim that the method somehow avoids the problem of double-counting (Baboulet, 2009, Sec. 2.6.3; Islam et al., 2016, Table 4) is insubstantial. The method avoids instances of double-counting only through its implicit use of binary double counting correction. Finally, we can see that the purported advantage of avoiding "*(...) the need to collect data and make assumptions that would be needed to populate the so-called upstream and downstream cut-off matrices (...) [which] makes the process more efficient as only the most significant nodes are modified*" (Stephan et al., 2019, Sec. 2.1) is void: Downstream cut-off coefficients are not considered simply by definition of the path-exchange method algorithm. On the other hand, all information which the practitioner of the path-exchange method has on specific processes can easily be arranged into a matrix—the upstream cut-off matrix.

8 Conclusion

The path-exchange method for HLCA does not represent a distinct mathematical method. It is instead equivalent to the tiered hybrid method for HLCA with binary double-counting where upstream flows are inferred from the sectoral system. While in Sect. 4 we have shown equivalency *in principle*, this of course holds true only in the case where the power series expansion of Eq. (62) is considered *ad infinitum*—a practical impossibility. Even though this computational burden can be mitigated by *computing the residual* as shown in Eq. (80), this adds additional complexity to a method which has already been described as "*infrequently used (...), possibly due to its time intensive nature and complexity*" (Hagenaars et al., 2025, Sec. 4.1.1).

Ultimately, more widespread use of HLCA methods will depend on the development of well-tested open-source software tools. Since, as we have shown in Sect. 3.3, use of the path-exchange method confers no distinct mathematical advantage, we see the selection of one or the other as a mere

question of personal preference for practical implementation in software.

We hope that our formal treatment of the path-exchange method will provide some much-needed clarity in the ongoing discussion surrounding the specific properties and applicability of methods for HLCA. It is our hope that work toward a unified theory of methods will continue, ultimately providing a sound mathematical basis for the development of open-source tools, which can be integrated into mainstream software for life cycle assessment.

Supplementary Information The online version contains supplementary material available at https://doi.org/10.1007/s44498-026-00023-1.

Acknowledgements The authors would like to thank Dr. Arthur Jakobs (Paul Scherrer Institute (PSI)) for helpful discussions related to the definition of the path-exchange method. The authors would also like to thank Dr. Benedict Bauer (formerly Vienna University of Technology and University of Vienna) for helpful discussions related to the properties of elementary paths and walks in the graph of economics sectors. The authors would also like to thank the team of the joint library for the Research Institutes within the ETH Domain (Lib4RI) for their tireless assistance in obtaining digitized copies of many early publications of HLCA. Finally, the authors would also like to thank Mr. Philipp Seeman for making a complete scan of his 1984 thesis available to us with the help of Ms. Rachel Rogers of the Department of Chemical & Process Engineering at the University of Canterbury, New Zealand. For the insight that formed the core of the proof in Sect. 3.5, the main author is indebted to the parish priests of the Jesuit Church in Innsbruck, whose 2023 Christmas homily provided unexpectedly fertile ground for mathematical musings.

Funding This work has been supported by the *Swiss Innovation Agency Innosuisse* in the context of the WISER Flagship Project (PFFS-21–72). Michael P. Weinold gratefully acknowledges the support of the *Swiss Study Foundation*.

Data availability Part of the data that support the findings of this study is available under a permissive license from a *Zenodo* repository at `doi:10.5281/zenodo.14786978`. Part of the data that support the findings of this study are available from *Ecoinvent*. Restrictions apply to the availability of these data, which were used under license for this study. Scalable Vector Graphics (SVG) source files for all diagrams are available from a *Zenodo* repository at `doi:10.5281/zenodo.16946629`.

Code availability The source code used for generating the data visualized in panels A and B of Fig. 7 is available under a permissive license from a *Zenodo* repository at `doi:10.5281/zenodo.14786978`.

Conflict of interest The authors declare no competing interests.

Open Access This article is licensed under a Creative Commons Attribution 4.0 International License, which permits use, sharing, adaptation, distribution and reproduction in any medium or format, as long as you give appropriate credit to the original author(s) and the source, provide a link to the Creative Commons licence, and indicate if changes were made. The images or other third party material in this article are included in the article's Creative Commons licence, unless indicated otherwise in a credit line to the material. If material is not included in the article's Creative Commons licence and your intended use is not permitted by statutory regulation or exceeds the permitted use, you will need to obtain permission directly from the copyright holder. To view a copy of this licence, visit http://creativecommons.org/licenses/by/4.0/.

References

Agez, M. (2024). Personal Communication on Equations (8)–(8') of "Lifting the veil on the correction of double counting incidents in hybrid life cycle assessment". *Journal of Industrial Ecology*. https://doi.org/10.1111/jiec.12945

Agez, M., Majeau-Bettez, G., Margni, M., Strømman, A. H., & Samson, R. (2019). Lifting the veil on the correction of double counting incidents in hybrid life cycle assessment. *Journal of Industrial Ecology, 24*(3), 517–533. https://doi.org/10.1111/jiec.12945

Agez, M., Wood, R., Margni, M., Strømman, A. H., Samson, R., & Majeau-Bettez, G. (2020). Hybridization of complete PLCA and MRIO databases for a comprehensive product system coverage. *Journal of Industrial Ecology, 24*(4), 774–790. https://doi.org/10.1111/jiec.12979

Baboulet, O. (2009). *Path exchange method for hybrid life-cycle assessment* [Master's Thesis, Norwegian University of Science and Technology]. http://hdl.handle.net/11250/233674

Bakindi, A., Wiberg, A. H., Norman, J., Marsh, E., & Allen, S. (2025). Hybrid Life Cycle Assessment (H-LCA) for buildings and construction materials: A systematic review and meta-analysis. *Building and Environment*. https://doi.org/10.1016/j.buildenv.2025.112630

Bullard, C., & Herendeen, R. (1975). Energy impact of consumption decisions. *Proceedings of the IEEE, 63*(3), 484–493. https://doi.org/10.1109/PROC.1975.9775

Bullard, C. W., Penner, P. S., & Pilati, D. A. (1976). *Energy analysis: Handbook for combining process and input–output analysis*. Tech. Rep. ERDA-77-61, 7208893. https://doi.org/10.2172/7208893

Bullard, C. W., Penner, P. S., & Pilati, D. A. (1978). Net energy analysis. *Resources and Energy, 1*(3), 267–313. https://doi.org/10.1016/0165-0572(78)90008-7

Crama, Y., Defourny, J., & Gazon, J. (1984). Structural decomposition of multipliers in input-output or social accounting matrix analysis. *Economie Appliqu é, 37*, 215–222.

Crawford, R. H., Bontinck, P.-A., Stephan, A., & Wiedmann, T. (2017). Towards an automated approach for compiling hybrid life cycle inventories. *Procedia Engineering, 180*, 157–166. https://doi.org/10.1016/j.proeng.2017.04.175

Crawford, R. H., Bontinck, P.-A., Stephan, A., Wiedmann, T., & Yu, M. (2018). Hybrid life cycle inventory methods—A review. *Journal of Cleaner Production, 172*, 1273–1288. https://doi.org/10.1016/j.jclepro.2017.10.176

Cruze, N. B. (2013). *Addressing allocation and disparity in methods of life cycle inventory* [Ph.D. dissertation, The Ohio State University]. http://rave.ohiolink.edu/etdc/view?acc_num=osu1357301664

Defourny, J., & Thorbecke, E. (1984). Structural path analysis and multiplier decomposition within a social accounting matrix framework. *The Economic Journal, 94*(373), 111. https://doi.org/10.2307/2232220

Ecoinvent Support. (2024). *Introduction to the Database*, Jan. 2024. https://support.ecoinvent.org/introduction-to-the-database

Font Vivanco, D., Wang, R., Deetman, S., & Hertwich, E. (2019). Unraveling the nexus: Exploring the pathways to combined resource use. *Journal of Industrial Ecology, 23*(1), 241–252. https://doi.org/10.1111/jiec.12733

Frischknecht, R., & Rebitzer, G. (2005). The ecoinvent database system: A comprehensive web-based LCA database. *Journal of Cleaner Production, 13*(13–14), 1337–1343. https://doi.org/10.1016/j.jclepro.2005.05.002

Hagenaars, R., Heijungs, R., Tukker, A., & Wang, R. (2025). Hybrid LCA for sustainable transitions: Principles, applications, and prospects. *Renewable and Sustainable Energy Reviews, 212*, Article 115443. https://doi.org/10.1016/j.rser.2025.115443

Harary, F. (1969). *Graph theory* (1st ed.). CRC Press. https://doi.org/10.1201/9780429493768

Heijungs, R., & Suh, S. (2022). *The computational structure of life cycle assessment* (Eco-efficiency in industry and science) (Vol. 11) (A. Tukker, Ed.). Springer. https://doi.org/10.1007/978-94-015-9900-9

Heijungs, R., Yang, Y., & Park, H.-S. (2022). A or I-A? Unifying the computational structures of process- and IO-based LCA for clarity and consistency. *Journal of Industrial Ecology, 26*(5), 1824–1836. https://doi.org/10.1111/jiec.13323

Hong, J., Shen, Q., & Xue, F. (2016). A multi-regional structural path analysis of the energy supply chain in China's construction industry. *Energy Policy, 92*, 56–68. https://doi.org/10.1016/j.enpol.2016.01.017

Islam, S., Ponnambalam, S., & Lam, H. L. (2016). Review on life cycle inventory: Methods, examples and applications. *Journal of Cleaner Production, 136*, 266–278. https://doi.org/10.1016/j.jclepro.2016.05.144

Joshi, S. (1999). Product environmental life-cycle assessment using input–output techniques. *Journal of Industrial Ecology, 3*(2–3), 95–120. https://doi.org/10.1162/108819899569449

Knuth, D.E. (1992). *Two notes on notation*. arXiv:http://arxiv.org/abs/math/9205211

Lang, S. (1987). *Linear algebra* (Undergraduate texts in mathematics) (S. Axler, F. W. Gehring, & K. A. Ribet, Eds.). Springer. https://doi.org/10.1007/978-1-4757-1949-9

Lave, L. B. (1995). Using input-output analysis to estimate economy-wide discharges. *Environmental Science & Technology, 29*(9), 420–426. https://doi.org/10.1021/es00009a748

Lenzen, M. (2000). Errors in conventional and input-output—based life—cycle inventories. *Journal of Industrial Ecology, 4*(4), 127–148. https://doi.org/10.1162/10881980052541981

Lenzen, M. (2002a). A guide for compiling inventories in hybrid life-cycle assessments: Some Australian results. *Journal of Cleaner Production, 10*(6), 545–572. https://doi.org/10.1016/S0959-6526(02)00007-0

Lenzen, M. (2002b). Differential convergence of life-cycle inventories toward upstream production layers: Implications for life-cycle assessment. *Journal of Industrial Ecology, 6*(3–4), 137–160. https://doi.org/10.1162/108819802766269575

Lenzen, M. (2007). Structural path analysis of ecosystem networks. *Ecological Modelling, 200*(3–4), 334–342. https://doi.org/10.1016/j.ecolmodel.2006.07.041

Lenzen, M. (2009). Dealing with double-counting in tiered hybrid life-cycle inventories: A few comments. *Journal of Cleaner Production, 17*(15), 1382–1384. https://doi.org/10.1016/j.jclepro.2009.03.005

Lenzen, M., & Crawford, R. (2009). The path exchange method for hybrid LCA. *Environmental Science & Technology, 43*(21), 8251–8256. https://doi.org/10.1021/es902090z

Liu, Z., Wei, Y., Li, Y., Yu, F., Wang, S., & Xue, B. (2024). Development, application and challenges of hybrid life cycle approaches. *Chinese Journal of Ecology, 43*(9), 2824–2833. https://doi.org/10.13292/j.1000-4890.202409.038

Miller, R. E., & Blair, P. D. (1985). *Input–output analysis: Foundations and extensions* (1st ed.). Prentice-Hall.

Miller, R. E., & Blair, P. D. (2009). *Input-output analysis: Foundations and extensions* (2nd ed.). Cambridge University Press. https://doi.org/10.1017/CBO9780511626982

Miller, R. E., & Blair, P. D. (2022). *Input-output analysis: Foundations and extensions* (3rd ed.). Cambridge University Press. https://doi.org/10.1017/9781108676212

Mongelli, I., Suh, S., & Huppes, G. (2005). A structure comparison of two approaches to LCA inventory data, based on the MIET and ETH databases (10 pp). *The International Journal of Life Cycle Assessment, 10*(5), 317–324. https://doi.org/10.1065/lca2004.12.198

Norris, G. A. (2002). Life cycle emission distributions within the economy: Implications for life cycle impact assessment. *Risk Analysis, 22*(5), 919–930. https://doi.org/10.1111/1539-6924.00261

Peters, G. P., & Hertwich, E. G. (2006a). Structural analysis of international trade: Environmental impacts of Norway. *Economic Systems Research, 18*(2), 155–181. https://doi.org/10.1080/09535310600653008

Peters, G. P., & Hertwich, E. G. (2006b). The importance of imports for household environmental impacts. *Journal of Industrial Ecology, 10*(3), 89–109. https://doi.org/10.1162/jiec.2006.10.3.89

Seeman, P. (1984). *Input output analysis and energy consumption* [Bachelor of Engineering Thesis, University of Canterbury].

Stadler, K., Wood, R., & Bulavskaya, T. et al. (2021). *EXIOBASE 3*. https://doi.org/10.5281/ZENODO.5589597

Stephan, A. (2023). *Pyspa*. https://github.com/hybridlca/pyspa

Stephan, A., & Bontinck, P.-A. (2019). *Pyspa API documentation*. Software Documentation. http://htmlpreview.github.io/?https://github.com/hybridlca/pyspa/blob/master/pyspa.html.

Stephan, A., Crawford, R. H., & Bontinck, P.-A. (2019). A model for streamlining and automating path exchange hybrid life cycle assessment. *The International Journal of Life Cycle Assessment, 24*(2), 237–252. https://doi.org/10.1007/s11367-018-1521-1

Stephan, A., Crawford, R. H., Bunster, V., Warren-Myers, G., & Moosavi, S. (2022). Towards a multiscale framework for modeling and improving the life cycle environmental performance of built stocks. *Journal of Industrial Ecology, 26*(4), 1195–1217. https://doi.org/10.1111/jiec.13254

Steubing, B., Wernet, G., Reinhard, J., Bauer, C., & Moreno-Ruiz, E. (2016). The ecoinvent database version 3 (part II): Analyzing LCA results and comparison to version 2. *The International Journal of Life Cycle Assessment, 21*(9), 1269–1281. https://doi.org/10.1007/s11367-016-1109-6

Strømman, A. H., Peters, G. P., & Hertwich, E. G. (2009). Approaches to correct for double counting in tiered hybrid life cycle inventories. *Journal of Cleaner Production, 17*(2), 248–254. https://doi.org/10.1016/j.jclepro.2008.05.003

Strømman, A. H., & Solli, C. (2008). "Applying Leontief's price model to estimate missing elements in hybrid life cycle inventories. *Journal of Industrial Ecology, 12*(1), 26–33. https://doi.org/10.1111/j.1530-9290.2008.00011.x

Suh, S., & Heijungs, R. (2007). Power series expansion and structural analysis for life cycle assessment. *The International Journal of Life Cycle Assessment, 12*(6), 381–390. https://doi.org/10.1065/lca2007.08.360

Suh, S., & Huppes, G. (2000). *Gearing input–output model to Life Cycle Assessment, Part I: General framework for hybrid approach*. Tech. Rep., Leiden University, Leiden, The Netherlands.

Suh, S., & Huppes, G. (2005). Methods for life cycle inventory of a product. *Journal of Cleaner Production,13*(7), 687–697. https://doi.org/10.1016/j.jclepro.2003.04.001

Treloar, G. J. (1997). Extracting embodied energy paths from input-output tables: Towards an input-output-based hybrid energy analysis method. *Economic Systems Research, 9*(4), 375–391. https://doi.org/10.1080/09535319700000032

Treloar, G. J. (1998). *Comprehensive embodied energy analysis framework* [PhD Thesis, Deakin University]. https://hdl.handle.net/10536/DRO/DU:30023444

Treloar, G., Fay, R., Ilozor, B., & Love, P. (2001). An analysis of the embodied energy of office buildings by height. *Facilities, 19*(5/6), 204–214. https://doi.org/10.1108/02632770110387797

Treloar, G. J., Love, P. E., & Holt, G. D. (2001). Using national input/output data for embodied energy analysis of individual residential buildings. *Construction Management and Economics, 19*(1), 49–61. https://doi.org/10.1080/014461901452076

Waugh, F. V. (1950). Inversion of the Leontief Matrix by power series. *Econometrica, 18*(2), 142. https://doi.org/10.2307/1907265

Weinold, M. P., & Majeau-Bettez, G. (2025). *Investigation of computational performance of different methods for hybrid life-cycle assessment*. Zenodo. https://zenodo.org/doi/10.5281/zenodo.14786978

Weisz, H., & Duchin, F. (2006). Physical and monetary input-output analysis: What makes the difference? *Ecological Economics,57*(3), 534–541. https://doi.org/10.1016/j.ecolecon.2005.05.011

Wiedmann, T. O., Suh, S., Feng, K., et al. (2011). Application of hybrid life cycle approaches to emerging energy technologies - the case of wind power in the UK. *Environmental Science & Technology, 45*(13), 5900–5907. https://doi.org/10.1021/es2007287

Publisher's Note Springer Nature remains neutral with regard to jurisdictional claims in published maps and institutional affiliations.