UNIVERSITÉ DE MONTRÉAL

DYNAMIQUE ET COMMANDABILITÉ DU RÉSEAU D'EAUX BLANCHES DANS UNE USINE INTÉGRÉE DE PAPIER JOURNAL

JOSÉ-ANTONIO ORCCOTOMA

DÉPARTEMENT DE GÉNIE CHIMIQUE

ÉCOLE POLYTECHNIQUE DE MONTRÉAL

THÈSE PRÉSENTÉE EN VUE DE L'OBTENTION

DU DIPLÔME DE PHILOSOPHIAE DOCTOR (Ph.D.)

(GÉNIE CHIMIQUE)

AOÛT 1997

© José-Antonio Orccotoma, 1997.

National Library of Canada
Bibliothèque nationale du Canada

Acquisitions and Bibliographic Services
Acquisitions et services bibliographiques

395 Wellington Street
Ottawa ON K1A 0N4
Canada

395, rue Wellington
Ottawa ON K1A 0N4
Canada

Your file Votre référence

Our file Notre référence

The author has granted a non-exclusive licence allowing the National Library of Canada to reproduce, loan, distribute or sell copies of this thesis in microform, paper or electronic formats.

L'auteur a accordé une licence non exclusive permettant à la Bibliothèque nationale du Canada de reproduire, prêter, distribuer ou vendre des copies de cette thèse sous la forme de microfiche/film, de reproduction sur papier ou sur format électronique.

The author retains ownership of the copyright in this thesis. Neither the thesis nor substantial extracts from it may be printed or otherwise reproduced without the author's permission.

L'auteur conserve la propriété du droit d'auteur qui protège cette thèse. Ni la thèse ni des extraits substantiels de celle-ci ne doivent être imprimés ou autrement reproduits sans son autorisation.

0-612-33016-8

Canada

UNIVERSITÉ DE MONTRÉAL

ÉCOLE POLYTECHNIQUE DE MONTRÉAL

Cette thèse intitulée:

DYNAMIQUE ET COMMANDABILITÉ DU RÉSEAU D'EAUX BLANCHES DANS UNE USINE INTÉGRÉE DE PAPIER JOURNAL

présentée par: ORCCOTOMA José-Antonio

en vue de l'obtention du diplôme de: Philosophiae Doctor

a été dûment acceptée par le jury d'examen constitué de:

M. TANGUY Philippe, Ph.D., président

M. PARIS Jean, Ph.D., membre et directeur de recherche

M. PERRIER Michel, Ph.D., membre et codirecteur de recherche

M. SAYDY Lahcen, Ph.D., membre

M. RUIZ Jean, Ph.D., membre

A mis Violetas... Carmen y Naomi

REMERCIEMENTS

Je remercie sincèrement mon directeur de recherche le professeur Jean Paris, et mon codirecteur le professeur Michel Perrier, pour leur appui en tout moment, et leurs conseils. Je leur suis reconnaissant de m'avoir donné la possibilité d'accomplir cette thèse de doctorat.

Je tiens à remercier Alain Roche de PAPRICAN et le professeur Roland Malhamé du département de génie électrique à Polytechnique pour leur collaboration assidue et leurs suggestions envers mon travail de recherche.

Ce projet de recherche a été possible grâce à une subvention Conseil de recherches en sciences naturelles et en génie du Canada (CRSNG). Pendant une grande partie de mes études à Polytechnique, j'ai été le bénéficiaire de la bourse Carl Winkler Memorial Fellowship de l'Institut canadien de recherches sur les pâtes et papiers (PAPRICAN); je remercie ces deux contributions financières.

J'ai apprécié les contacts personnels et professionnels avec les personnes côtoyées au sein du département de génie chimique à Polytechnique ; pour leur aide, leur amitié et tous les bons moments passés à Polytechnique dont je garde d'excellents souvenirs, je remercie Chantal, Nathalie, Ernesto, Larin, Caroline, Michelle, Marco,

Maryam, Jalel, Tom, Julie, Sophie, Dimitri et tous les membres du groupe de génie papetier.

Finalement, j'exprime ma reconnaissance envers ma famille. Carmen-Violeta mon épouse et Violeta-Naomi ma fille, pour leur patience et leur support témoignés durant cette thèse.

RÉSUMÉ

De nombreuses perturbations affectent la production de papier journal. Par conséquent, elles peuvent rendre le contrôle difficile et provoquer des pertes de temps en production. Parmi les plus fréquentes, on peut citer la casse de la feuille dans la machine à papier et la fluctuation de la qualité des matières premières entrant dans l'atelier de préparation de la pâte. Même si les effets de ces perturbations sont bien connus dans les usines, la complexité du procédé et les interactions à l'intérieur de la ligne de production compliquent l'étude de ces phénomènes. Dans l'industrie papetière, on utilise le terme d'instabilité de la machine à papier et de son circuit d'eaux blanches pour caractériser les périodes pendant lesquelles on n'arrive pas à maintenir un rythme de production soutenu. Ces situations sont caractérisées par une fréquence élevée de casses et par des variations incontrôlées de la rétention et du grammage.

Ce projet a pour objectif la détermination des caractéristiques dynamiques du réseau d'eaux blanches dans une usine de papier journal et la détermination de la commandabilité de ce procédé. Le travail a été tout d'abord concentré sur l'établissement d'un diagramme d'écoulement, par la suite on a mis au point un modèle mathématique à l'aide duquel on a caractérisé sa dynamique. Enfin, l'analyse de commandabilité a permis d'établir des valeurs limites pour les variables

du procédé, afin d'atteindre un niveau de performance pré-établi.

Dans l'étape de caractérisation de la dynamique du procédé, on a utilisé un modèle générique d'usine basé sur des données obtenues dans des usines existantes. Dans un premier temps, on a étudié le problème de la gestion des cassés et des eaux blanches. Ensuite, on a abordé un aspect qui est primordial dans l'étude de l'effet des perturbations, la détermination des profils de distribution de matière dans le réseau d'eaux blanches, tels que ceux des fibres, des fines et des solides dissous. Le procédé est perturbé lorsque, d'une façon ou d'une autre, un de ces profils est altéré. Dans la machine à papier, deux des propriétés qui sont directement liées à ces variations sont la rétention première et le grammage. Un modèle de rétention a été proposé afin de tenir compte de l'influence de la teneur en fines sur la rétention. Dans la littérature, cet effet a été décrit comme étant une relation de proportionnalité inverse. Ce modèle a permis d'estimer les effets de la recirculation des cassés, ainsi que ceux de la fluctuation de la qualité de la pâte alimentée au procédé.

La simulation dynamique est un outil pour établir des critères de design d'un procédé ou de son système de contrôle, mais elle a certaines limites. Il faudrait une quantité énorme de simulations pour étudier de façon rigoureuse un domaine complet de conditions d'opération. Par contre, le concept de commandabilité a un

potentiel d'application intéressant pour les procédés industriels. On peut déterminer les limites imposées par le design, même avant la conception du système de contrôle. Les résultats de cette analyse sont facilement applicables à l'identification des points critiques dans une ligne de production, afin d'apporter des améliorations ou des modifications au design existant.

L'analyse de commandabilité a été faite en considérant deux sections dans l'usine: la zone de préparation de la pâte et la zone de formation de la machine à papier. Deux variables au niveau de la machine à papier ont été retenues: le grammage du papier et la rétention première. Il est possible d'établir des intervalles dans lesquels on voudrait maintenir ces propriétés malgré les perturbations. Lorsque pour une certaine perturbation les variables de sortie dépassent les limites imposées, on dit que le procédé n'est pas commandable dans ces conditions. On a trouvé que, pour une configuration choisie, la variation des propriétés de la pâte dans le courant entrant dans la machine devait satisfaire certaines conditions. On peut citer par exemple, des fluctuations de ±1% maximum de la consistance et des fluctuations de ±2% maximum de la concentration en fines. Dans les cas où les variations sont supérieures à ces valeurs, on peut s'attendre à des dépassements des limites pré-établies de ±1% pour les deux variables de sortie: le grammage et la rétention.

Ce travail est fondamental pour une meilleure compréhension du fonctionnement

du réseau d'eaux blanches. L'incorporation d'un modèle de rétention dans la simulation dynamique a permis d'établir des bilans dynamiques dans la machine à papier et de suivre ses interactions avec la ligne de production. Les effets des perturbations peuvent être interprétés par des variations dans les profils de distribution de matière et leurs effets sur la rétention première et le grammage. Enfin, l'analyse de la commandabilité a permis de déterminer les conditions pour lesquelles les variables de sortie, le grammage et la rétention, dépassent des limites pré-établies.

ABSTRACT

Newsprint production is affected by many disturbances which may render difficult the control of the process and may also cause production delays. The most frequent disturbances are sheet breaks in the paper machine, and fluctuations in the quality of the raw materials supplied to the pulp preparation area. Despite the fact that these disturbances are well known in mills, the complexity of the process and the interactions in the production line, make the study of these phenomena complicated. In the paper industry, the term instability of the paper machine and its white-water circuit is used to describe the periods in which stable production is not reached. During those periods, an unusual break frequency and uncontrollable fluctuations of the first-pass retention and the basis weight are observed.

The objective of this study is to characterize the dynamics of a white-water network in a newsprint mill, and to determine its controllability. This study was focused on establishing a flow diagram, followed by the development of a mathematical model to characterize its dynamics. Finally, the controllability analysis was used to establish limiting conditions for the process variables in order to satisfy a pre-established performance level.

When characterizing the process dynamics, a generic flowsheet based on

information from existing mills was used. Initially, sheet breaks and white-water management were studied. Then, a key aspect in the study of the effect of disturbances was considered: the mass distribution profile of the total fibrous material, the fines, and the dissolved solids in a white-water network. The process is disrupted when one of these profiles is altered. In a paper machine, there are two properties directly linked to those variations, the first-pass retention, and the basis weight of the paper sheet. A retention model that takes into account the influence of the fines content on retention, has been proposed. Retention decreases as fines content in the pulp increases. By including a retention equation into the dynamic model, it has been possible to estimate the effects of changes in broke recirculation, and variations in the pulp quality.

Dynamic simulation has limitations when it is used to optimise a process design or its control system. Extensive trial and error essays are required to achieve a result. On the other side, the concept of controllability has an enormous potential for application in industrial processes. It is possible to determine the process limitations before the design of the control system. The results of this analysis are easily applicable to the identification of critical points in the production line, and can be further used to improve or modify an existing design.

The controllability analysis has been performed by taking into account two sections

of the mill: the pulp preparation area, and the forming section of the paper machine. Two variables have been retained in the paper machine: the basis weight and the first-pass retention. It is possible to establish limits within it is desirable to keep those variables in spite of disturbances. The process is said to be non-controllable when an output variable escapes the pre-established limits. For a selected configuration, the variation of pulp properties in the inlet pulp stream should satisfy certain conditions; for example, consistency fluctuations of ±1% maximum, and fines content fluctuations of ±2% maximum. In cases where fluctuations exceed these limits, excursions of the output variables, basis weight and retention, outside the pre-established limit of ±1% may be expected.

This study is fundamental for a better understanding of the operation of a white-water network. The inclusion of a retention model into the dynamic simulation, has allowed to establish transient mass balances around the paper machine and to identify the interactions with the production line. The effect of disturbances can be better described in terms of variations of the material profiles in the network, and their effects on retention and basis weight. Finally, the controllability analysis has been used to determine the conditions at which the output variables, basis weight and retention, exceed the pre-established limits.

TABLE DE MATIÈRES

DÉDICACE iv

REMERCIEMENTS v

RÉSUMÉ vii

ABSTRACT xi

TABLE DE MATIÈRES xiv

LISTE DE TABLEAUX xix

LISTE DE FIGURES xxi

LISTE DES SIGLES xxiv

LISTE DES ANNEXES xxviii

CHAPITRE I: INTRODUCTION 1

1.1 Problématique 1

1.2 Objectifs 9

1.3 Organisation de la thèse 10

CHAPITRE II: DYNAMICS OF WHITE-WATER NETWORKS DURING WEB BREAKS 13

2.1 Présentation 14

2.2 Executive summary 15

2.3 Introduction 16

2.4 Overview of the sheet break problem. 17

2.5 Process modelling and simulation 20

2.5.1 Process flowsheet 20

2.5.2 Steady-state balances 21

2.5.3 Dynamic modelling 23

2.5.4 Control system. 24

2.5.5 Tuning of controllers 25

2.5.6 Simulation 28

2.6 Results 29

2.6.1 Single break case 29

2.6.2 Multiple break case 31

2.7 Discussion 33

2.8 Conclusions 37

2.9 Acknowledgements. 38

2.10 Literature cited 39

CHAPITRE III: DYNAMIC ANALYSIS OF FIBROUS MATERIAL AND DISSOLVED SOLIDS DISTRIBUTION IN THE WET-END OF A NEWSPRINT MILL 52

3.1 Présentation 53

3.2 Abstract. 55

3.3 Introduction 55

3.4 Literature review 56

3.5 Process description 61

3.6 Dynamic modelling 63

3.6.1 Model assumptions 63

3.6.2 First-pass modelling 65

3.6.3 Paper machine forming section 69

3.6.4 Algorithm 70

3.7 Results and discussion 71

3.7.1 Fibrous material distribution 71

3.7.2 Dissolved solids distribution. 72

3.7.3 Dynamics of changes in the feed fines content. 73

3.7.4 Dynamics of changes in broke recirculation 74

3.7.5 Effect of broke recirculation control. 75

3.8 Conclusion 77

3.9 Acknowledgements 78

3.10 Nomenclature 79

3.11 References 80

CHAPITRE IV: PAPER MACHINE CONTROLLABILITY: EFFECT OF DISTURBANCES ON BASIS WEIGHT AND FIRST-PASS RETENTION 97

4.1 Présentation 98

4.2 Abstract. 100

4.3 Introduction 100

4.4 Controllability analysis 102

4.4.1 Scaling 104

4.4.2 Bandwidth 105

4.4.3 Poles and zeros 106

4.4.4 Relative gain array 106

4.4.5 Condition number. 108

4.4.6 Time delay constraints 108

4.4.7 Performance requirements imposed by disturbances. . . 109

4.4.8 Limitations imposed by input constraints 111

4.5 Process description 114

4.6 Model development. 116

4.6.1 Pulp components 116

4.6.2 Main assumptions. 116

4.6.3 Scaling factors 117

4.6.4 Paper machine model. 118

4.6.5 Pulp preparation area. 121

4.7 Results and discussion 122

4.7.1 Paper machine. 122

4.7.1.1 Effect of disturbances on basis weight 123

4.7.1.2 Effect of time delay on basis weight. 124

4.7.1.3 Grade changes and command tracking. 125

4.7.1.4 Effect of disturbances on first-pass retention. . . . 126

4.7.2 Pulp preparation area. 127

4.7.2.1 Effect of disturbances on output variables 128

4.7.2.2 Disturbances and input saturation 129

4.7.2.3 Uncontrolled outputs in the pulp preparation area 129

4.8 Conclusion 130

4.9 Acknowledgements 132

4.10 Nomenclature 132

4.11 References 135

CHAPITRE V: REMARQUES FINALES 154

CONCLUSION 158

1- Contribution au domaine 158

2- Perspectives 162

BIBLIOGRAPHIE 163

ANNEXES 174

LISTE DE TABLEAUX

CHAPITRE II: Dynamics of white-water networks during web breaks.

Tableau 2.1 Main steady-state conditions. 42

Tableau 2.2 Reservoir dimensions. 43

Tableau 2.3 Process control loops 44

Tableau 2.4 Level controllers parameters. 45

CHAPITRE III: Dynamic analysis of fibrous material and dissolved solids distribution in the wet-end of a newsprint mill.

Tableau 3.1 Selected experimental conditions and retention values calculated from Graff (1991) 85

Tableau 3.2 Sectional retention in the paper machine. 85

CHAPITRE IV: Paper machine controllability: effect of disturbances on basis weight and first-pass retention.

Tableau 4.1 Mass balances in the wet-end 138

Tableau 4.2 Scaling factors for the paper machine. 139

Tableau 4.3 Scaling factor for the mixing and machine chests 140

Tableau 4.4 Equations representing stream properties in zones I and II of the paper machine. 141

Tableau 4.5 Mass balances in the mixing pump and silo (global, fibrous material, fines and dissolved solids) 142

Tableau 4.6 Additional data for flowsheet in Figure 4.1 143

Tableau 4.7 Mass balances in mixing and machine chests (global, fibrous material, fines and dissolved solids) 144

CHAPITRE V: Remarques finales.

Tableau 5.1 Conditions limites dans la machine à papier. 156

LISTE DE FIGURES

CHAPITRE II: Dynamics of white-water networks during web breaks.

Figure 2.1 Studied section of the newsprint mill 46

Figure 2.2 Simulated wet-end flowsheet 47

Figure 2.3 Variation of tank levels (single break case). 48

Figure 2.4 Main flow rates (single break case) 48

Figure 2.5 Consistency in the mixing and machine chests (single break case) 49

Figure 2.6 Variation of tank levels (multiple break case) 49

Figure 2.7 Main flow rates (multiple break case). 50

Figure 2.8 Consistencies of major streams around the mixing chest (multiple break case) 50

Figure 2.9 Main temperatures in the wet-end (multiple break case). . 51

Figure 2.10 Steam consumption (multiple break case) 51

CHAPITRE III: Dynamic analysis of fibrous material and dissolved solids distribution in the wet-end of a newsprint mill.

Figure 3.1 Wet-end flowsheet 86

Figure 3.2 Fines content in the headbox and retention, from Graff (1991) 87

Figure 3.3 Simplified diagram of the paper machine forming section. 88

Figure 3.4 Total fibrous material first-pass retention in the paper machine as a function of fines content in the headbox. 89

Figure 3.5 Fibrous material distribution in the network 90

Figure 3.6 Dissolved solids distribution in the network. 91

Figure 3.7 Dynamic effects of changes in the fines content of the fresh pulp 92

Figure 3.8 Change in the broke recirculation rate 93

Figure 3.9 Effect of a change in the broke recirculation rate, white-water and pulp flow rates 94

Figure 3.10 Feedback control of broke tank level by manipulation of the broke fraction in the furnish 95

Figure 3.11 Manual and automatic control of the broke tank level for a multibreak sequence 96

CHAPITRE IV: Paper machine controllability: effect of disturbances on basis weight and first-pass retention.

Figure 4.1 Feedback control system (scaled) 145

Figure 4.2 Wet-end flowsheet 146

Figure 4.3 Plant and disturbances transfer function 147

Figure 4.4 Effect of disturbances on the paper machine (t=2 min. 1% step

in consistency; t=20 min. 2% step in fines) 148

Figure 4.5 Basis weight set point change (a 2% ramp input from t=2 min. to t=12 min.) 149

Figure 4.6 Effect of disturbances on retention 150

Figure 4.7 Disturbance condition number (mixing and machine chests). 151

Figure 4.8 Inputs for perfect control (mixing and machine chests). . 152

Figure 4.9 Inputs for acceptable control (mixing and machine chests). 153

LISTE DE SIGLES

CHAPITRE III: Dynamic analysis of fibrous material and dissolved solids distribution in the wet-end of a newsprint mill.

C = consistency, %

Cp = specific heat, kj/(kg °C)

M_i = i-th fiber fraction, mass flow rate, t/d

R = first-pass retention, %

R_i = i-th fiber fraction retention, %

T = total fibrous material mass flow rate, t/d

Y_i = i-th fiber fraction in the headbox

Y_f = fines fraction in the headbox

Greek letters

α = level for I type error

ρ = pulp density, t/m^3

Superscripts

I = paper machine first forming zone

II = paper machine second forming zone

Subscripts

f = fines (P200)

F = fibers (R200)

h = headbox

n = size of fiber fraction in pulp

w = paper web

ww = white-water

CHAPITRE IV: Paper machine controllability: effect of disturbances on basis weight and first-pass retention.

BW = basis weight

c_i = ith consistency, fraction

C_i = ith scaled consistency

d = scaled disturbance

e = scaled error

f_i = ith flowrate, m^3/min

F_i = ith scaled flow rate

G = scaled plant transfer function

G_c = scaled controller

G_d = scaled disturbance transfer function

G_V = thick stock valve transfer function

g_d = transfer function for a single disturbance

L = open loop transfer function

R = first-pass retention

S = sensitivity function

r = scaled reference

u = scaled manipulated variable

y = scaled output variable

y_i = ith fines content, fraction

y_f = fines content in eq.(4.22), fraction

Y_i = ith scaled fines content

V_A = mixing chest volume, m^3

V_B = machine chest volume, m^3

V_C = silo volume, m^3

z_i = dissolved solids, ppm

Greek characters

γ = condition number

γ_d = disturbance condition number

θ = time delay, min

λ_{ij} = ijth element of RGA

Λ = RGA matrix

σ = singular value

ω = frequency, rad/min

ω_c = gain crossover frequency, rad/min

ω_B = closed loop bandwidth, rad/min

ω_d = frequency at which $|G_d| = 1$.

Superscripts

I = paper machine forming zone 1.

II = paper machine forming zone 2.

Subscripts

f = fines

F = long fibres

ss = steady state

LISTE DES ANNEXES

ANNEXE A: Dynamics of fines distribution in a white-water network 174

ANNEXE B: Bilans détaillés à l'aide de tableurs, application aux procédés des pâtes et papiers 193

CHAPITRE I: INTRODUCTION

1.1 Problématique

L'industrie du papier journal utilise principalement comme matière première de la pâte mécanique et de la pâte thermomécanique (PTM). Ces pâtes sont produites en utilisant des raffineurs qui séparent les fibres contenues dans les copeaux de bois. Les processus de production de la pâte mécanique et de la pâte PTM diffèrent par l'ajout pour le second, d'un traitement thermique sous pression pendant l'étape de raffinage. Avant d'être alimentée à la machine à papier, la pâte provenant des raffineurs est mélangée à d'autres sources additionnelles de fibres, comme celles provenant de pâte désencrée, ou éventuellement de pâte chimique. A l'intérieur du procédé, des courants contenant des fibres sont recirculés et mélangés avec les sources externes. Ces courants apportent les fibres provenant de la remise en pâte des cassés et les fines récupérées dans le ramasse pâte.

De par la nature même de ses procédés, l'industrie papetière est une grande consommatrice d'eau. Traditionnellement, la consommation d'eau fraîche et le débit des effluents des usines de papier ont été très élevés. La pression exercée par les réglementations environnementales a obligé l'industrie papetière à s'orienter vers une réduction progressive de la consommation d'eau fraîche, en réutilisant les eaux

du procédé. L'industrie papetière au Canada a fait d'importants progrès dans ce domaine. Au cours des dernières années, la consommation d'eau fraîche est descendue approximativement à 50% de sa valeur de 150 m^3/t en 1976 (CPPA, 1995). L'industrie papetière est en évolution continue, les marchés deviennent de plus en plus compétitifs, et cela implique un effort constant pour améliorer la productivité et la qualité du produit final. En plus de la réduction de la consommation d'eau, les tendances observées dans cette industrie (Black, 1991) sont orientées vers l'augmentation de la vitesse des machines à papier et la réduction du grammage comme une alternative afin de réduire la consommation de fibres du bois.

La fermeture progressive des circuits implique l'augmentation de la concentration de certains constituants dans la pâte tels que les fines et les solides dissous. De nombreux problèmes liés à l'augmentation de ces constituants ont été observés. Les fines ont un effet sur les propriétés de la pâte comme l'égouttage (Rahman, 1987), elles peuvent nuire à la rétention première dans la machine, former des dépôts sur la surface des toiles de la machine et donc réduire leur durée de vie (Barnes, 1994). Les solides dissous peuvent affecter des propriétés du papier comme la brillance, avoir des effets négatifs sur la formation de la feuille de papier dans la machine et réduire sa résistance à la rupture. D'autres problèmes occasionnés par les solides dissous sont l'augmentation de la vitesse de corrosion et la tendance à la formation

de mousse (Heller, 1979).

Une propriété qui est directement affectée par l'augmentation des fines et des solides dissous dans la pâte est la rétention première. Pendant la formation de la feuille, la rétention des fines dans le matelas fibreux (Britt, 1985a et Pelton, 1985) est déterminée par deux mécanismes: le premier est un processus de rétention mécanique ou de filtration (les fines sont retenues dans les interstices du matelas fibreux en fonction de leur taille); tandis que le deuxième mécanisme, l'attraction colloïdale, est en relation avec les forces d'attraction entre les surfaces des particules fibreuses. De nombreuses études ont mis en évidence qu'une augmentation de fines dans la pâte cause une diminution de la rétention. Notamment, les travaux de Hergert (1979), Scott (1986) et Amiri (1996).

Le procédé de fabrication de papier journal n'est jamais en régime stationnaire. Comme les divers réservoirs et équipements de production ont des temps de séjours différents, la pâte passe constamment de processus à dynamique lente à des processus à dynamique rapide. De plus, diverses perturbations affectent le procédé: la casse de la feuille dans la machine à papier et les fluctuations de la qualité des composants de la pâte. À cause de cela, le régime stationnaire n'est qu'une approximation. L'étude de ces phénomènes est rendue difficile par la complexité du procédé. Le circuit de production inclut plusieurs boucles de recirculation des eaux

blanches à travers toute l'usine. Pour toutes ces raisons, l'étude de ce procédé est faite à l'aide de modèles mathématiques.

La simulation en régime permanent permet de caractériser la distribution de matière dans le circuit d'eaux blanches et de répondre à certaines questions. Parmi ses applications les plus fréquentes, on trouve l'étude des possibilités de réduction de la consommation d'eau fraîche et ses effets secondaires (Noël, 1993 et Asselman, 1996). La simulation dynamique est davantage orientée vers l'étude et la caractérisation de la dynamique d'un procédé, de son système de contrôle pour une configuration d'usine pré-établie, et de sa réponse transitoire lors d'une perturbation. Ainsi, Jones (1994) a développé un modèle dynamique pour une machine à papier dans lequel il a testé diverses stratégies de contrôle; les travaux de Croteau et Roche (1987) ainsi que celui de Bussière (1992) sont orientés vers la gestion des cassés et des eaux blanches. Une limite des études dynamiques précédentes a été la détermination de propriétés telles que la rétention au niveau de la machine.

Le développement d'un modèle dynamique exige de suivre une procédure qui commence par l'établissement d'un modèle en régime permanent. Cette étape demande certaines informations comme les débits de certains courants, les consistances et la composition de la pâte (fibres, fines, et solides dissous), et les

températures. Cette information est généralement obtenue à partir de campagnes d'échantillonnage et de mesures en usine. Les résultats des bilans en régime permanent permettent de caractériser la distribution de matière dans le circuit de la pâte et d'estimer la rétention de chacun de ses composants dans la machine. Finalement, la mise au point du modèle dynamique exige des informations additionnelles telles que les caractéristiques des équipements et du système de contrôle.

La simulation dynamique comme outil d'étude présente des limites lors de l'analyse d'un procédé qui est sujet à des conditions très variables. Souvent, la performance du contrôle d'une propriété est imparfaite et on n'arrive pas à maintenir les variables près de leurs cibles lors d'une perturbation ou d'un changement de consigne. Parfois on considère le système de contrôle comme l'origine de ces problèmes. L'approche par simulation demande une quantité énorme d'essais afin de trouver une solution (s'il y en a). Les procédés peuvent devenir difficiles à contrôler par la présence de fortes interactions, d'instabilités, de délais dans le procédé et dans ses instruments de mesure. Tous ces éléments limitent la performance du procédé et de son système de contrôle.

La commandabilité entrée-sortie (Skogestad, 1994) est un concept qui permet d'étudier les procédés d'une façon systématique; il répond aux questions suivantes:

le procédé sera-t-il facile à contrôler?, quelle est la structure du système de contrôle que l'on devrait utiliser?, quelle est la meilleure performance à laquelle on peut s'attendre? Une méthodologie détaillée pour l'étude de procédés mono et multivariables a été présentée par Skogestad et Postlethwaite (1996). La procédure inclut l'analyse des interactions, la détermination des limitations dans la performance imposées par les perturbations et les contraintes sur les variables à manipuler. La commandabilité entrée-sortie est une propriété inhérente au procédé et ne dépend pas du système de contrôle. L'étude de la commandabilité utilise des modèles linéarisés obtenus à partir d'un ensemble d'équations qui représentent le procédé.

Les études précédentes reliées à la commandabilité entrée-sortie incluent les travaux de Ziegler et Nichols (1943) qui ont défini la commandabilité comme étant la capacité d'un procédé d'atteindre et de maintenir un niveau d'équilibre pré-établi. Morari (1983) a introduit le concept de la commande parfaite comme un outil afin d'obtenir un aperçu des limitations inhérentes au procédé. Des notions sur les limitations de la performance de procédés ont été proposées par Francis and Zames (1984), Morari et Zafiriou (1989) et Chen (1995). Le terme commandabilité est fréquemment associé dans la communauté scientifique à un concept plus restrictif, la commandabilité d'état. Dans les années 60, Kalman propose le concept de commandabilité d'état, qui veut dire l'habilité d'emmener les états d'un système

d'un point initial vers un point final durant un temps fini. Beaucoup de procédés industriels ne sont pas commandables (au sens de la commandabilité d'état) mais ils sont parfaitement bien contrôlés en terms de leurs variables de sortie; de la même façon, des procédés qui ne sont pas commandables (entrée-sortie), sont éventuellement non commandables d'état. Afin d'éviter des confusions entre la commandabilité dans le sens pratique et la commandabilité d'état, Morari (1983) a proposé le terme de la résilience dynamique. Mais dans ce terme le rapport avec le contrôle n'apparaît pas clairement. À cause de cela, Skogestad (1994) recommande finalement le terme de commandabilité entrée-sortie.

Dans l'industrie papetière, Luquet (1995) et Gess (1996) ont décrit des problèmes d'*instabilité* dans les machines à papier et leurs réseaux d'eaux blanches. La qualité du papier présente une grande variabilité en termes de grammage. À l'intérieur de la ligne de production, on observe des variations de la rétention et de la consistance des eaux blanches. En conséquence, le débit des fibres à récupérer dans les eaux blanches est plus grand, ce qui peut nuire au fonctionnement de l'unité de récupération de fibres ou ramasse pâte. Dans les usines intégrées de production de papier journal, les effets de variations dans les eaux blanches se font sentir dans toutes les unités de procédés où il y a de la dilution. Lindstrom (1994) et Mardon (1997) proposent des limites sur la variabilité tolérable dans les courants de pâte; leurs recommandations se basent exclusivement sur leur expérience dans l'industrie.

Les problèmes décrits ci-dessus comme des *instabilités* de la machine à papier et de son réseau d'eaux blanches sont un cas typique d'un procédé qui peut devenir non commandable à cause des interactions et de l'effet des perturbations. Tout changement dans la composition de la pâte alimentée à l'atelier entraîne des répercussions qui affectent la distribution de la matière à l'intérieur de la ligne de production. Ces perturbations sont à l'origine des fluctuations des propriétés comme la rétention et le grammage.

1.2 Objectifs

Ce projet vise deux objectifs. En premier lieu, la caractérisation dynamique du réseau d'eaux blanches pour une configuration d'usine pré-établie; cette étape inclut:

- la détermination d'une configuration générique d'usine;
- l'évaluation de ses caractéristiques dynamiques lors des perturbations;
- l'évaluation du design de procédés et de son système de contrôle.

Les résultats de la caractérisation dynamique sont préalables au deuxième objectif qui est la détermination de la commandabilité du procédé. Cette étape comprend:

- l'identification des concepts applicables;
- le développement de modèles linéaires du réseau d'eaux blanches;
- la détermination de conditions limites de contrôlabilité pour ce procédé.

1.3 Organisation de la thèse

Cette thèse est présentée sous la forme d'articles et elle en contient trois. Le premier article a été accepté pour publication et les deux suivants ont été soumis à des revues du domaine. En plus de ces articles qui représentent chacun un chapitre de la thèse, ce document comprend aussi une introduction générale, des conclusions, des recommandations et deux annexes. Le contenu de chaque section est résumé ci-dessous:

Chapitre I - Introduction. Ce chapitre comprend une description de la problématique des réseaux d'eaux blanches, ainsi qu'une présentation des objectifs de cette thèse.

Chapitre II - Dynamics of White-Water Networks During Web Breaks. Cet article a été accepté pour publication dans la revue Tappi Journal; il décrit le comportement dynamique d'un réseau d'eaux blanches dans une usine générique de papier journal lors d'une casse de la feuille dans la machine à papier. Il présente aussi une procédure détaillée pour le développement d'un modèle dynamique.

Chapitre III - Dynamic Analysis of Fibrous Material and Dissolved Solids Distribution in the Wet End of a Newsprint Mill. Cet article a été soumis pour

publication dans la revue Appita Journal. Dans ce chapitre on étudie la distribution de matière (fibres, fines et solides dissous) dans la partie humide et son évolution en réponse à des perturbations. Un modèle de rétention est proposé afin de tenir compte de l'effet des fines dans le courant de pâte alimentée à la machine à papier. Une version préliminaire de cet article a été présentée au congrès ACPP 1996 et retenue pour publication dans Pulp & Paper Canada; cette publication est présentée dans la Annexe A.

Chapitre IV - Paper Machine Controllability: Effect of Disturbances on Basis Weight and First-Pass Retention. Cet article a été soumis à la revue Canadian Journal of Chemical Engineering, il inclut une révision des concepts appliqués lors de l'analyse de la commandabilité entrée-sortie pour des systèmes mono et multivariables. Suit le développement de modèles de l'atelier de préparation de la pâte et de la zone de formation de la machine à papier. Finalement, il traite l'évaluation de l'effet des perturbations, les situations dans lesquelles il y a la saturation de la variable à manipuler et la détermination des limites de la commandabilité du procédé.

Chapitre V - Remarques Finales. Ce chapitre présente une synthèse des résultats des chapitres précédents.

Conclusion

Annexe A - Dynamics of Fines Distribution in a White-Water Network. Cet article est une version préliminaire du chapitre II.

Annexe B - Bilans détaillés à l'aide de tableurs, applications aux procédés des pâtes et papiers. Conférence estivale de l'ACPP-1995, Québec. Dans cet article on analyse la problématique de bilans en régime permanent et la possibilité de l'utilisation de tableurs.

CHAPITRE II

DYNAMICS OF WHITE-WATER NETWORKS DURING WEB BREAKS

José-Antonio Orccotoma[1], Jean Paris[1], Michel Perrier[1], and Alain Roche[2]

[1] Department of Chemical Engineering, Ecole Polytechnique, C. P. 6079, succ. Centre-ville, Montréal (Qc), Canada H3C 3A7

[2] Systems and Engineering Section, PAPRICAN, 570 St. John's Blvd., Pointe Claire (Qc), Canada H9R 3J9

(Accepted for publication in TAPPI Journal)

Keywords : Dynamic Simulation, Web Breaks, White-Water Networks, Pulp and Paper

2.1 PRÉSENTATION*

L'établissement et la définition d'un diagramme d'écoulement représentatif d'une usine de papier journal est une étape nécessaire à l'accomplissement des objectifs du projet. Il faut d'abord déterminer quelle partie de l'usine sera choisie pour l'étude. Ce chapitre montre la procédure suivie lors de la construction du modèle dynamique. Dans un premier temps, on a considéré que la pâte n'est composée que de fibres et d'eau. Par la suite, on a établi les hypothèses de base pour le développement de bilans en régime stationnaire.

Le développement du modèle dynamique a impliqué la collecte d'informations additionnelles, telles que les volumes de réservoirs et l'identification des objectifs du contrôle. Un des objectifs visés par ce chapitre a été la caractérisation de la dynamique du procédé lors des perturbations. On a choisi comme perturbation les casses de la feuille dans la machine à papier, afin de mettre en évidence l'importance du design de procédés dans la gestion des inventaires de cassés et des eaux blanches.

---

* Cette section a pour but de faire le lien entre les articles de la thèse.

2.2 EXECUTIVE SUMMARY

Transient behaviour in white-water networks is particularly difficult to analyze due to the complexity of the process and the large number of recirculation loops and interactions between individual operations. In newsprint mills, a frequent perturbation is the break of the paper sheet in the paper machine. This perturbation may actually affect the production capacity of a mill by reducing the efficiency of the paper machine. In this study, a dynamic model representing a generic wet-end flowsheet and its control system has been developed to simulate the effect of paper breaks, to characterize the dynamics of the process and to test the control system design under stringent conditions.

Transient behaviour has been studied first by analyzing a single break case and then by using a severe sequence of breaks taken from mill data to study the process under extreme situations. The broke recirculation ratio was manipulated to manage broke inventories and to avoid tank overflows. Dilution requirements during breaks were estimated and the eventual addition of fresh water and its thermal effects on the network were considered.

Characterizing the dynamic behaviour of a white-water network may be helpful at all stages of the process and control system design: defining process configuration, estimating reservoir capacity and selecting control strategies. In existing mills, this

analysis is useful to improve water and broke management by establishing policies aimed at reducing the impact of perturbations.

2.3 INTRODUCTION

Control of the wet-end white-water network in a highly-closed integrated newsprint mill is a difficult task. The complex configuration of the network promotes interactions between the large number of variables involved. Furthermore, the process operation is subject to frequent perturbations. The most frequent and most important perturbation is the break of the web on the paper machine. Repulping of broke consumes large amounts of white-water, thus creating sudden variations in the white-water and broke inventories. When several breaks occur in close sequence, the addition of fresh water may become necessary. The rate of broke recycling which can be achieved without causing additional perturbations is a constraint, so is the broke tank capacity. In highly closed mills where there is little room for manoeuvering, the management of water inventories may become particularly difficult. Characterizing the dynamics of white-water networks under high closure conditions is paramount to equipment sizing (for new designs or implementation of closure strategies), white-water management and integrated process control.

The objectives of this work were, (i) the development of a dynamic model of a

generic but representative newsprint wet-end flowsheet to study the transient response of the white-water network and the variations of the broke and white-water stocks in response to web breaks and, (ii) the evaluation of the performance of a pre-established design (white-water network and its control system) when dealing with major disturbances in a mill working under high closure conditions.

2.4 OVERVIEW OF THE SHEET BREAK PROBLEM

Web breaks occur when adhesion of the sheet to contacting surfaces is greater than its cohesiveness. This happens when two conditions are simultaneously present: high load and low strength *(1)*. A sequence of breaks may be characterized by their average duration and frequency. Break duration is the time elapsed between the moment when the sheet is ruptured and the moment when its continuity is restored in the paper machine. This duration, varying from a few minutes to hours, depends on the break type (generally wet breaks have longer duration than dry breaks) and the severity of the problem (difficulty to restore the sheet or eventual failure of a piece of equipment). The break frequency seems to be dependent upon the basis weight; the average interval between two breaks increases at higher basis weight *(2)*. As breaks occur in the open draws where the sheet is not supported, great efforts have been devoted to the development of means to reduce or to close the open draws not only in new machines, but also by equipment retrofit in existing machines. The ultimate goal would be to provide uninterrupted web support from

the headbox to the calender *(3)*.

The most frequent causes of breaks in the wet-end of a machine have been identified as stock quality variations, low web strength, low dryness, lumps, slime and water drops *(4)*. However, there is no physically-based predictive model to forecast breaks occurrence for given operating conditions and despite recent developments on these subjects, anticipating or preventing the triggering event (jagged edge, for example) remains an elusive goal and sheets breaks continue to be a frustating problem which affects paper machine performance. For the time being, web breaks can only be treated as random phenomena. A probabilistic model using Markov chains has recently been proposed *(5)* on the basis of correlations between paper breaks characteristics, machine speed and broke reuse rate, derived from a large set of actual mill data.

During a break, the paper sheet is diverted to a pit under the machine where it is dispersed in white-water. This repulped broke is then pumped and stored in the broke tank, and from there it is progressively reinjected in the main pulp stream. Repulping of the broke requires large amounts of water. This large and sudden consumption of water modifies the white-water inventory and creates cascading effects throughout the network. When there are frequent breaks, the management of broke and white-water inventories becomes a delicate task. Broke inventories

may require higher recirculation rates to avoid broke tank overflow, thus affecting pulp composition and eventually paper machine retention. It is well accepted that the stability of the white-water system *(6-7)*, defined here as the capacity to keep the process close to an eqilibrium value, is a key factor in the operation of the paper machine. Other major causes for upsets in a white-water system are: excessive fresh water addition, poor mixing or lack of agitation in white-water tanks (causing tank stratification), insuffisant white-water tank capacity and poor control of broke stock *(4)*.

The wet-end is a complex network interconnecting all the pulp preparation equipment and the forming section of the paper machine. The study of this network during transient conditions requires an accurate and a reliable dynamic model. Dynamic simulation is being used increasingly in the pulp and paper industry. Previous studies *(8-9)* have mainly focused on the transient behaviour of a white-water network in response to breaks, and the development of broke and white-water management policies. Dynamic modelling has also been used to simulate a white-water network to test control strategies *(10)* and to compare solution algorithms and computational structures such as differential equation solvers (Parode), types of process simulation software (Simulink and Extend) and discrete time modelling (Markov series) *(11)*. In our study we have used dynamic simulation to characterize the wet-end behaviour in response to sheet breaks in the paper

machine and to evaluate the ability of the design (process and its control system) to reject perturbations.

2.5 PROCESS MODELLING AND SIMULATION

The development of a dynamic model of a white-water network and of its broke recirculation system, which is simple and general, yet representative of actual situations involved the following steps: First, an appropiate process flowsheet and a control system were choosen. Then, detailed steady-state mass and heat balances were performed on the basis of representative data. Finally, the results of the steady-state balances were used as initial values for the set of differential and algebraic equations representing the dynamic model. Those steps are summarized below.

2.5.1 Process flowsheet

The portion of the newsprint mill considered in this work is shown on Figure 2.1 while the detailed simulated process flowsheet is shown on Figure 2.2. It corresponds to the wet-end of a typical but generic single line newsprint mill of 600 t/d production capacity and includes: the paper machine forming zone, the stock preparation area, the machine white-water network and the broke repulping system.

Feedstock to the preparation area is fresh thermomechanical pulp (TMP) at 8% consistency. The fresh pulp is stored in the high consistency tank and then diluted by using white-water from the white-water chest (stream 11). It is subsequently mixed in the mixing chest with repulped trimmings, broke and fibers recovered from the saveall. This mixed pulp is then conditioned for papermaking, i.e. homogenized, cleaned and screened. It is also further diluted at this stage with white-water from the machine white-water chest (streams 12,13 and 14) and with white-water from the machine directly collected in the silo. The main pulp stream is at 0.9% consistency when it is delivered to the headbox.

During normal machine operation, only the wet trimmings representing approximately 3% of the total paper production are collected in the couch pit. When a break occurs, the paper sheet is diverted to the couch pit and clear white-water is then added for dilution (stream 15). The repulped broke is returned to the mixing chest via the broke storage tank.

Two disruptions may occur after prolonged or repeated breaks: (i) broke tank overflow because its storage capacity is insuffisant or because of constraints on the allowable amount of recycled broke, and (ii) interruption of clear white-water availability to dilute broke, which requires the addition of fresh water.

2.5.2 Steady-state balances

This phase required the collection of basic wet-end operating data such as consistencies, flow rates and temperatures; they are selected values taken from an actual newsprint mill mass balance *(12)*. Preliminary partial balances were used to check the initial process flowsheet before performing the complete mass and energy balances. Steady-state was defined as those periods with no web break and when the recycled broke is composed exclusively by the trimmings. Detailed steady-sate mass and energy balances of this process flowsheet were initially obtained by using a spreadsheet *(13)*. The main hypothesis when establishing steady-state balances were:

- The pulp is composed of water and fibers, no lenght classification was considered in this work.

- Pulp physical properties, such as density and heat capacity, were estimated at different consistancies assuming additivity of water and fiber properties.

- In energy balances, no heat exchanges were considered between any equipment and its surroundings except at the paper machine. To estimate those heat losses, we assumed a fixed temperature drop (approx. 0.5°C) between the feed coming from the headbox and the white-water streams leaving the machine.

- Fresh water consumption in the paper machine showers was fixed at 10 m^3 per tonne of paper produced.

Main results obtained from the steady-state balances of the selected flowsheet are shown on Table 2.1. Fresh water addition to the clear white-water tank is not required during steady-state.

2.5.3 Dynamic modelling

For the purpose of dynamic modelling, new information concerning the geometry of the reservoirs (height and cross sectional area), the control system and the establishment of additional hypotheses about the process were necessary:

- The wet-end contains two types of equipment, those which have a strong dynamic impact on the white-water network (essentially the reservoirs), and the equipment with very short residence time compared to the reservoirs (cleaners, screens, headbox and the formation zone of the paper machine) which have fast dynamics.

- Properties in the reservoirs (consistancies and temperature) were considered as homogeneous and the reservoir were represented by the classical continuous stirred tank (CST) model. It should be noted that the perfect mixing assumption

may not apply to the reservoirs with large residence times and a high elevation difference between inlet and outlet such as the stock tank (Figure 2.2). Nevertheless, a CST model was used for this tank because its dynamics have no effects on the perturbation studied, i.e. recycling system.

- Delays introduced by the piping system, valves and instrumentation (sensors and controllers) were neglected.

The capacities and dimensions of all reservoirs used in the simulations are given in Table 2.2. Residence times were calculated at target volume except for the couch pit and broke tank, for which they were estimated on the basis of flow rates at break conditions.

2.5.4 Control system

The main objectives of the proposed control system indicated in the flow diagram of Figure 2.2 were: (i) to assure the uniformity of the stock supply to the paper machine, i.e. the amount of pulp at required conditions for papermaking (0.9% pulp consistency and 60°C in the headbox), and (ii) to manage broke and clear white-water inventories by preventing broke overflows or the need for fresh water addition. To achieve these objectives, we have incorporated control loops for tank levels, consistencies, flow rates and temperatures. Each controller was

independently tuned by considering its control loop as a single-input single-output system (SISO). All controllers are conventional proportional and integral controllers (PI). The description of each control loop is summarized in Table 2.3.

The control of the main process variables such as consistency, temperature and flow rate was considered at selected locations in the wet-end:

- Pulp consistency is controlled at the mixing chest. The dual mixing-machine chests configuration should ensure good uniformity of the main pulp stream. The mixing of the fresh pulp, broke, recovered fibers from the saveall and overflow from the machine chest is carried out in the mixing chest, and the final adjustment in pulp consistency is achieved by further dilution in the machine chest. The pulp is further diluted with white-water from the short recirculation loop, before it is delivered to the paper machine.

- Temperature is regulated in the silo (short recirculation loop) by direct steam addition, which is an indirect way to keep pulp headbox temperature within acceptable operational limits. The purpose of this control loop is to reduce the effect of temperature changes in the white-water network which may be caused by the addition of an excessive amount of fresh water.

- Thick-stock flow rate in commercial newsprint mills is controlled by the basis-weight gauge at the reel. In our study, this control loop was always kept in open loop mode since the main objective was the characterization of the dynamics of the network and specially of the broke and clear water inventories.

- Broke reuse rate is controlled at the mixing chest and the level of this chest is adjusted by manipulating fresh pulp and broke inlet streams. The broke reuse rate is fixed manually. The selected value depends on how broke inventories evolve and how frequent breaks occur. In many mills this value is selected by operators, and it usually varies from 5% to 20%.

2.5.5 Tuning of controllers

Considering that the dynamic of the white-water network model are determined by the response of the reservoirs, special care was given to the level control loops. They were specified by using the analytical method for level and inventory control described by Marlin *(14)* in which two cases are considered. In the first case or *tight level control,* the level is the critical parameter while large variations in the manipulated flowrate can be tolerated; the second situation, called *averaging level control,* occurs when level variations are not critical as long as the level remains within specified limits. In this case the manipulated flow rate does not experience rapid changes of significant importance. The *tight level* control was selected for the

level control loops, because the objective was to keep levels close to a target by manipulating some inlet or outlet flow rates. The parameters for a PI controller, the gain K_c and the reset time T_i, are then given by the following equations:

$$K_c = -\frac{2}{e}\left(\frac{\Delta F_{MAX}}{\Delta h_{MAX}}\right) \qquad (2.1)$$

$$T_i = \frac{4\,\xi^2\,A}{(-K_c)} \qquad (2.2)$$

Where e is the natural base (2.7183). These equations imply that the variation in the level response will reach a maximum allowable value Δh_{MAX} when the maximum variation in the stream perturbation is ΔF_{MAX}. This allowable level variation must be specified for each tank, and it becomes a design criterion for controller tuning. In equation 2, A is the cross sectional area of the reservoir and the damping factor, ξ, is usually set equal to 1. In equations 1 and 2, the negative sign associated to the gain implies that the tank level is controled by manipulating the outlet flow (assuming an air-to-open valve); those signs would be positive if the manipulated flow was the inlet. The values of the PI parameters obtained after using equations 1 and 2 are given in Table 2.4. The selected criterion to obtain the PI parameters for consistency and temperature control loops was the settling time: less than 30 sec. and 3 min. for consistency and temperature loops respectively. In the case of flow

controllers the settling time was short enough when compared to other control loops. For this reason we have considered instantaneous set point tracking.

2.5.6 Simulation

Dynamic simulations were carried out by using SPEEDUP *(15)*, a multipurpose equation-oriented package for processes and control systems simulations. SPEEDUP is a simultaneous solver in which all equipment are represented by a set of mixed ordinary differential equations (ODEs) and algebraic equations (AEs). The simulation of the process consists of solving the system of differential and algebraic equations (DAEs) for given initial conditions. Early methods for the solution of DAEs systems in the common semi-explicit form,

$$f(\dot{x}, x, y, t) = 0 \qquad (2.3a)$$

$$g(x, y, t) = 0 \qquad (2.3b)$$

relied on solving the algebraic equations (2.3b) numerically to obtain the algebraic variables y in terms of the differential variables x. The algebraic variables can then be substituted into the differential equations (2.3a), thus effectively converting them to a set of implicit ordinary differential equations. The main limitation of this approach is that the solution of complicated ODE systems requires multiple evaluations of the residuals of the differential equations, each evaluation itself being

performed by an iterative solution of the algebraic equations.

Gear's method *(16)* overcomes this problem by solving the differential and algebraic equations simultaneously. A detailed overview of equation-oriented dynamic models has been presented by Pantelides and Barton *(17)*. SPEEDUP provides numerical routines for the solution of dynamic simulation problems. Among several possibilities available, the default integration algorithm is a modified Gear's method. The integration step is automatically varied and the estimated integration error is kept within a pre-specified tolerance.

The process diagram of Figure 2.2, which includes 45 process streams, 15 process units, and 13 control loops, was represented by approximately 500 differential and algebraic equations. The SPEEDUP software, was installed on a IBM Risc 6000 platform. The execution time was approximately 2 min. for a real time period of 500 min.

2.6 RESULTS

2.6.1 Single break case

To illustrate the wet-end dynamic behaviour of the process and its control system, its transient response to a single break was first simulated. The sequence of events

is the following: the system is originally at steady-state with 3% of broke recirculation rate (trimmings from the paper machine); at time 20 min. a break occurs, it lasts 40 min.; at time 120 min. the broke reuse rate is increased to 10%. This increase was purposefully applied with a substantial delay to observe separately the direct effect of broke repulping on white-water inventories and the effect of broke reuse.

As shown on Figure 2.3, before the break occurs, the water level is rising in the clear white-water tank since the surplus of water generated in the wet-end is stored in that tank. During the break, the broke tank level increases rapidly, it levels out at the end of the broke and starts to go down again when the broke recycling rate to the main pulp stream is increased. The couch pit experiences sharp variations. Its level first increases when the break occurs; then as the level controller LC_4 takes action and increases the flow rate of repulped broke to the broke tank, the couch pit level returns to its set point value; finally when the web is again restored and the paper production resumed, there is a sudden imbalance as the incoming flow of dilution water is immediatly stopped after the break causing a temporary reduction in the level, followed by a slow return to the target level because the inlet stream resumes its initial value.

The white-water chest collects the white-water from the paper machine which is

then redistributed through the network, to dilute the fresh pulp before it is supplied to the paper machine. During breaks there are no important changes in this chest, but when the broke recirculation ratio is increased the white-water distribution within the network is altered. As the rate of broke reuse is increased, the flow rate of fresh pulp from the stock tank to the mixing chest is reduced, as indicated in Figure 2.4. This immediately causes a reduction of the required amounts of white-water for dilution (stream 11). As the total white-water produced at the paper machine and the other white-water flow rates remain essentially constant, the ultimate effect of the sheet break is an increase of the white-water excess in the wet-end.

As shown in Figure 2.5, machine chest consistency is maintained constant at 2.8%, but the mixing chest consistency increases slightly when the broke recirculation rate is increased because the broke is at 3.5% consistency while the fresh pulp supply is at 3.0%. This effect causes a slight increase of the white-water flow to dilute the main pulp stream at the machine chest (stream 12). The flow rate variations of the clear white-water used to diluted trimmings and breaks are indicated in Figure 2.4 (stream 15).

2.6.2 Multiple-break case

Following the characterization of the process by the single break simulation, its

robustness was tested by simulating a severe sequence of breaks taken from actual mill data. It consists of four wet breaks during a 500 minutes period with the following time distribution: **10**(15), **40**(15), **85**(100), **360**(15), where the bold numbers are the times in minutes at which breaks occur and the numbers in parenthesis are the corresponding break durations. To avoid overflow of the broke tank, the broke recirculation ratio was increased. Fresh water is added to the clear white-water tank as soon as its level reaches 10%. The initial levels were 30% and 20% in the broke and clear water tanks respectively (Figure 2.6). As expected, broke tank level increased rapidly with each break while the clear water tank level decreased. At time 105 min. this level dropped to 10% requiring the addition of fresh water.

The couch pit level shows higher peaks than in the single break case. This is explained by cumulative effects: second and third breaks occurred before the effect of the precedent break had completely vanished (this may be verified by comparing couch pit level profiles in Figures 2.3 and 6). To avoid broke tank overflows, the broke recirculation ratio was increased succesively up to 30%. Increasing broke content in the pulp implies a lower amount of fresh pulp thus reducing needs for dilution and increasing the excess of white-water to the saveall. Figure 2.7 shows the changes in main flow rates to the mixing chest (fresh pulp and broke), and the variations on main white-water streams as consequence of the changes in the broke reuse ratio. The final result of all these changes is an increment of the white-water

excedents (stream 20). On Figure 2.8, the slight increase in the mixing chest consistency was the result of the higher broke consistency compared to the fresh diluted pulp (3.5% and 3.0% respectively). The variations in consistency in the diluted pulp are the result of the change in broke reuse, this affect temporarily the loop CC_1.

Thermal changes caused by the fresh water addition to the clear water tank were also illustrated by this simulation. As described earlier, fresh water addition at 15°C causes rapid temperature drops in the clear water tank (Figure 2.9). Despite this large temperature change, the temperature variation through the network was damped by the successive dilutions of the broke and its mixing with other process streams during the recirculation. The target temperature in the silo was 60°C. This temperature was satisfactorily maintained because no constraints on the steam supply were specified. The headbox temperature remained quite constant close to 59.5°C, but steam requirement in the silo was increased from 75 t/d to 110 t/d as shown in Figure 2.10.

2.7 DISCUSSION

Reservoir dimensions used in this study were taken from actual cases and are similar to those currently found in the newsprint industry. The clear white-water and broke tanks are the largest ones in the wet-end of a paper mill. Usually the

dimensioning of these reservoirs is based on holding time criteria. Two main parameters should be considered when sizing a broke tank, the expected break frequency and the broke reuse rate, which affect broke inventories in opposite directions. The broke tank capacity (1900 m^3) is equivalent to 1.6 times the longest sustained trouble period considered (100 minutes) when storing broke at 3.5% consistency.

The mass balances around the wet-end indicate that there is a water surplus which is the result of two factors: the higher siccity of the wet web leaving the forming zone when compared to the fresh feed, and the fresh water added to the showers of the machine. This surplus causes the clear water tank to be in continuous overflow. A design objective for this tank is to stock enough water to dilute the broke. The capacity of this unit should match the broke tank size thus avoiding the addition of fresh water. The clear water tank capacity is 3000 m^3, which corresponds approximately to 450 minutes retention time. A consequence of this is the fresh water requirement, which happens only when there is a long duration break (more than one hour) and the initial tank level is below 30%. This low level condition should be considered as an extreme situation and is not likely to happen on a frequent basis.

The fresh high consistency pulp at 8% is stored in the stock tank; the 900 m^3 capacity

of this tank enables the paper machine to run up to three hours without fresh pulp supply from the TMP mill. This tank also reduces the effect of perturbances caused by high frequency variability in the fresh pulp.

The pulp and white-water streams have been modeled by a two component system: fibres and water. This simplified system was chosen to characterize the dynamic behaviour of the wet-end during breaks. Interactions between broke and clear water inventories underline the importance of dynamic characterization when designing broke and clear water tanks. Appropriate capacity choice may diminish the impact of perturbations by reducing changes during broke reuse and also avoiding the use of fresh water for broke dilution.

When characterizing wet-end dynamic behaviour in response to web breaks, two aspects should be considered. First, breaks will increase inventories in the broke tank and will reduce those in the clear water tank. This first aspect is not controlled or predicted, it simply happens: broke must be diluted, repulped and stocked. The second aspect is the need for broke recycling. The amount of broke to be recycled is a decision generally taken by the operator, on the basis of broke inventories and largely influenced by his experience. Broke reuse affects the process by changing the pulp composition and the white-water distribution in the network.

Dynamic modelling results may be used in two ways: during the design of new mills, to determine from historical data in similar plants (break duration and frequency) the optimum tank size without overflow for a certain broke recirculation ratio; and for existing mills, to find a compromise between the broke recycling rate and the broke content of the pulp without affecting paper properties and machine performance. From the standpoint of breaks impact, the process configuration studied has shown good performance. The single break case did not seriously affect the broke and clear water inventories. Its duration (40 minutes) may be considered as a good approximation of daily average break time in a newsprint mill. By considering trimmings and an average daily break time, a constant broke reuse rate would have been enough to manage broke inventory. When the system is occasionally disturbed by multiple breaks, the fast increase in the broke tank level requires an increase of the broke reuse rate up to 30%.

Fresh water addition to dilute broke causes some changes in temperature throughout the wet-end. These variations indicate long term dynamics and, transient responses are felt during many hours. The sequence of reservoirs acts as a buffer: the effect of the perturbation is soften through the reservoirs. This is a typical behaviour observed on intensives properties such as temperature and concentration.

The focus of this work was on the modelling and the characterization of the dynamic of a white-water network, further work in progress considers the controllability of the paper machine and its white-water network. Fiber length distribution (i.e., fibers-fines), and the total dissolved solids content should also be included as process variables. The addition of fines as a new component implies that the machine forming zone cannot not be considered as an elementary separation unit: the effect of the headbox fines content on the first pass retention should be considered.

2.8 CONCLUSIONS

The simulation presented illustrates the use of a dynamic model to show the most significant time dependant characteristics of a typical white-water network during a sequence of wet breaks. Changes in variables such as: tank levels, consistencies, flow rates and temperatures have been computed in response to this perturbation. Though average daily breaks are in most cases of lower frequency, the break sequence analysed made possible to test the process design during severe perturbations. The white-water networks have long term dynamics. The effect of perturbations may continue through the system for hours and sometimes days. The steady-state behavior represents an hypothetical situation which is never fully reached. For the simulated model, the process configuration and its control system dealt effectively with breaks by keeping the main variables under control.

2.9 ACKNOWLEDGEMENTS

This work was supported by a Paprican scholarship through the Carl Winkler Memorial Foundation and a Strategic Grant of the Natural Sciences and Engineering Research Council of Canada. The software SPEEDUP was used under an academic license from Aspen Technology Inc. These contributions are gratefully acknowledged.

2.10 LITERATURE CITED

1. ROISUM, D. R., *Tappi J.* 73(2):101-106 (1990).

2. ROUNSLEY, R.R., *Tappi J.* 66(9):69-73 (1983).

3. McDONALD, J. D., DAUNAIS, R., PIKULIK, I. T. and PYE, I. T., *Pulp & Paper Canada* 92(3):T62-T65 (1991).

4. LINSTROM, R., MANFIELD, W. H., TKACZ, A. F. and MARDON, J., *Appita* 47(2):163-172 (1994).

5. KHANBAGHI, M., MALHAME, R., PERRIER, M. and ROCHE, A., 82nd Annual Meeting of the Technical Section CPPA, Montreal, January 1996, p. A1.

6. LUQUET, G., *Tappi J.* 78(10):256-258 (1995).

7. GESS, J. M. and KANITZ, R. A., *Tappi J.* 79(4):119-126 (1996).

8. CROTEAU, A.P.and ROCHE, A.A., *Pulp & Paper Canada* 88(11):T420-T423 (1987).

9. BUSSIERE, S., ROCHE, A. and PARIS, J., *Pulp & Paper Canada* 93(4):T97-T100

(1992).

10. JONES, G.L. and KOEPKE S.A., *Tappi J.* 77(8):111-120 (1994).

11. KROPHOLLER, H., WISEMAN, N. and HARRIS, E., *Appita* 47(4):301-304 (1994).

12. LEROY, C., SORIN, M., ASSELMAN, T., ORCCOTOMA, J. and PARIS, J., Projet C.D.T. C138, Le Centre de Dévelopment Technologique de l'École Polytechnique - Montréal 1993.

13. ORCCOTOMA, J., CARRIÈRE, M., WALOSIK, S., PARIS, J., ACPP, Section Technique, Conf. Technologique Estivale, Québec (1995), p. 79-84.

14. MARLIN, T.E., "Process Control: Designing Processes and Control Systems for Dynamic Performance", Chapter 18, 1st Edition - McGraw-Hill (1995).

15. "Speedup User Manual - Release 5.4", Aspen Technology Inc. Ed., Cambridge (1993).

16. GEAR, C.W., IEEE *Trans. Circ. Theory,* CT-18(1):89(1971).

17. PANTELIDES, C.C. and BARTON, P.I., *European Symposium on Computers Aided Process Engineering, ESCAPE-2*, Toulouse (1992), p. S263-S285.

TABLE 2.1: Main Steady-State Conditions.

Stream	Flow rate (l/min)	Cons. (%)	Temp. (°C)
1	5154	8.00	60.0
2	14849	3.00	59.1
3	358	3.50	58.9
4	20193	2.97	59.1
5	17271	2.80	59.0
6	100484	1.00	59.7
7	105500	0.90	59.6
8	94950	0.90	59.6
9	2193	18.00	59.1
10	4167	0.00	55.0
11	9695	0.31	58.7
12	1396	0.31	58.7
13	1241	0.31	58.7
14	12616	0.31	58.7
15	290	0.03	58.8
16	68	18.00	59.1
17	67951	0.52	59.5
18	28905	0.29	58.5
19	75[a]	—	—
20	7358	0.31	58.7
21	0[b]	0.00	15.0

[a]Saturated steam at 690 kPa (t/d), [b] Fresh water is not required in steady-state conditions.

TABLE 2.2: Reservoir Dimensions.

Description	Capacity (m^3)	Height (m)	Res. Time[a] (min)	Target level (%)
Stock tank	900	12	90	50
Mixing chest	240	5	7.5	50
Machine chest	265	5	15	100
Silo	50	7	1	100
WW chest	200	5	3	50
Couch pit	90	3	2.5[b]	33
Clear ww tank	3000	17	450	---[c]
Broke tank	1900	15	160[b]	---[c]

[a]Based on target levels during normal steady-state operation.
[b]Residence time calculated at break conditions.
[c]For simulation purposes these levels were allowed to vary freely.

TABLE 2.3: Process Control Loops.

Controller	Controlled Variable	Manipulated Variable
LC_1	Stock tank level	Process feed flow rate
LC_2	Mixing chest level	TMP pulp & repulped broke flow rates
LC_3	WW chest level	Excess ww flow rate
LC_4	Couch pit level	Repulped broke to broke tank
CC_1	TMP pulp consistency	Dilution ww flow rate (stream 1)
CC_2	Machine chest feed consistency	Dilution ww flow rate (stream 2)
CC_3	Secondary screen feed consistency	Dilution ww flow rate (stream 3)
CC_4	Secondary cleaner feed consistency	Dilution ww flow rate (stream 4)
FC_1	Pulp flow rate to machine chest	Outlet flow rate from mixing chest
FC_2	Pulp flow rate to silo	Outlet flow rate from machine chest
FC_3	Pulp flow rate to primary cleaner	Exit from mixing pump
FC_4	Water flow rate to TMP	Exit from clear ww tank
TC_1	Silo temperature	Steam flow rate to silo
RC_1	Broke fraction to mixing chest	Fresh pulp and broke flow rates

TABLE 2.4: Level Controllers Parameters.

Controller	Equipment	ΔF_{MAX} (m^3/min)	Δh_{MAX} (m)	K_c (m^3/min.m)	T_i (min)
LC_1	Stock tank	3	0.25	8.8	34
LC_2	Mixing chest	5	0.1	37	5.2
LC_3	WW chest	10	0.25	-30	5.3
LC_4	Couch pit	12	0.25	-35	3.4

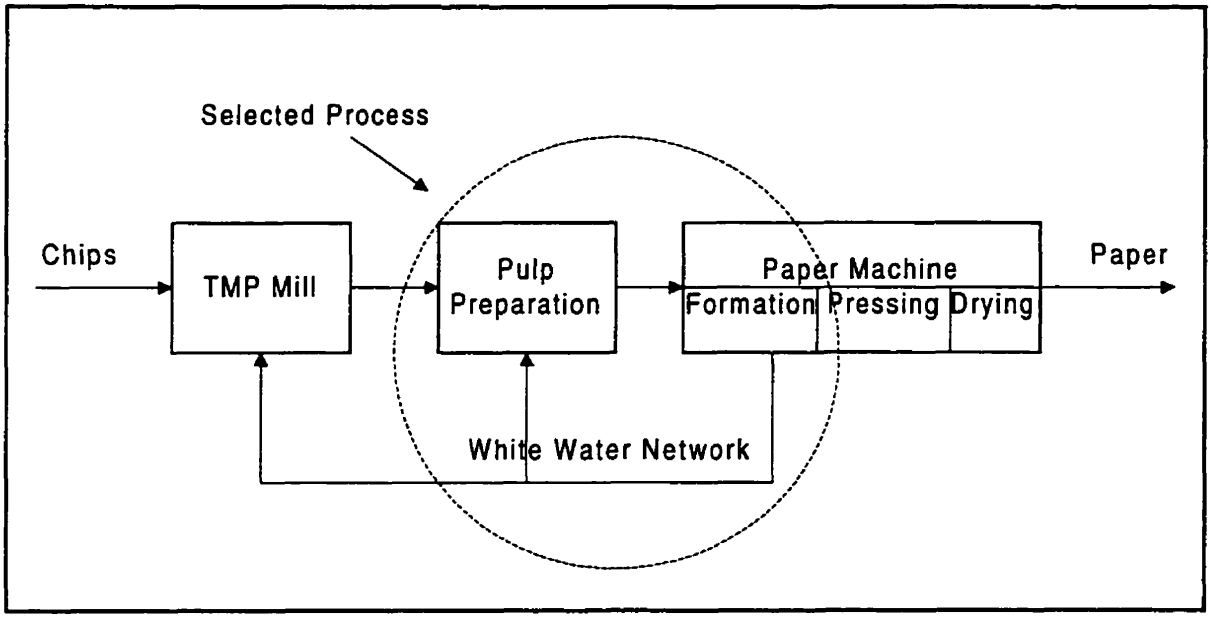

Figure 2.1: Studied section of the newsprint mill.

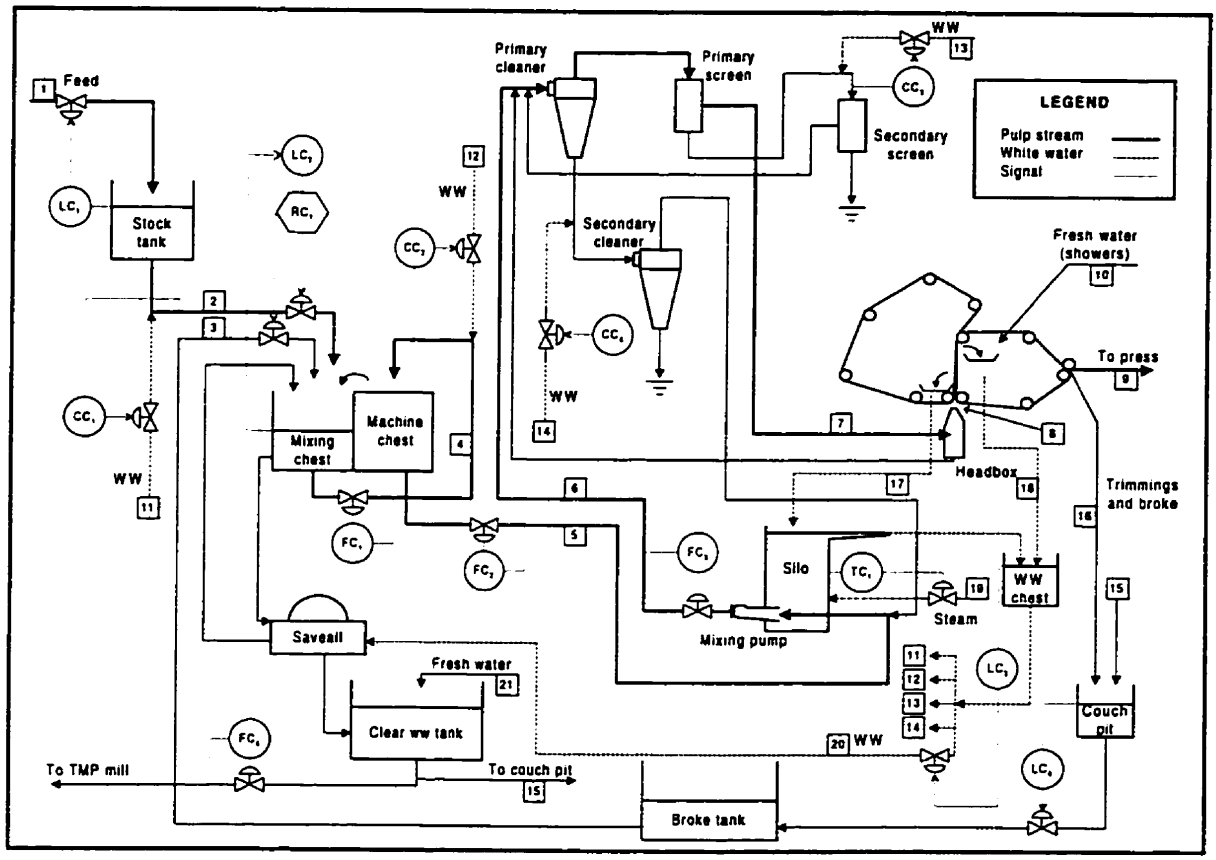

Figure 2.2: Simulated wet-end flowsheet.

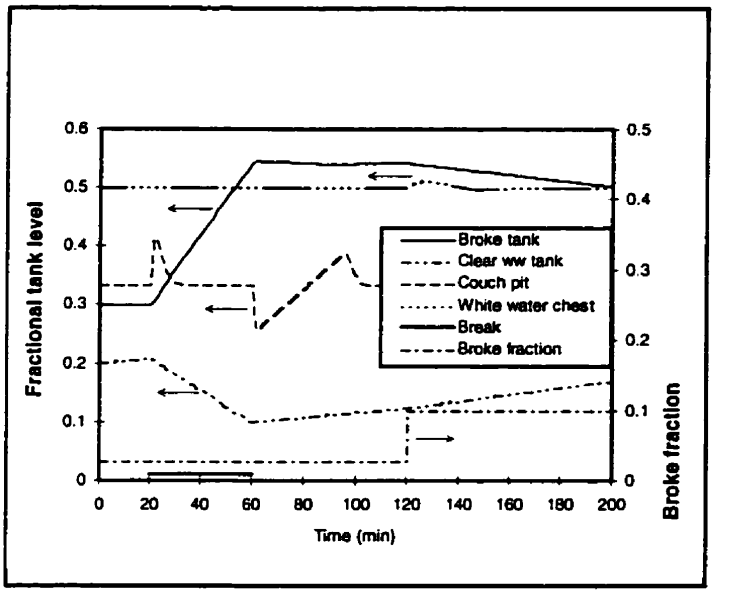

Figure 2.3: Variation of tank levels (single break case).

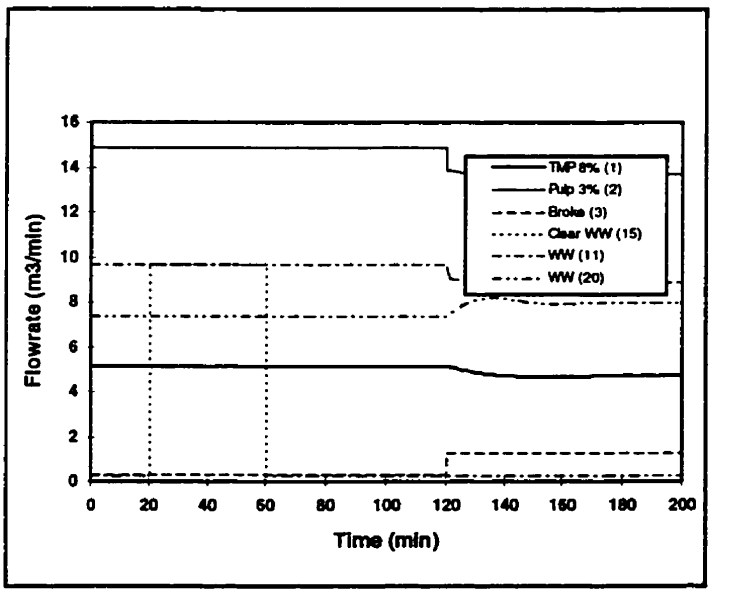

Figure 2.4: Main flow rates (single break case).

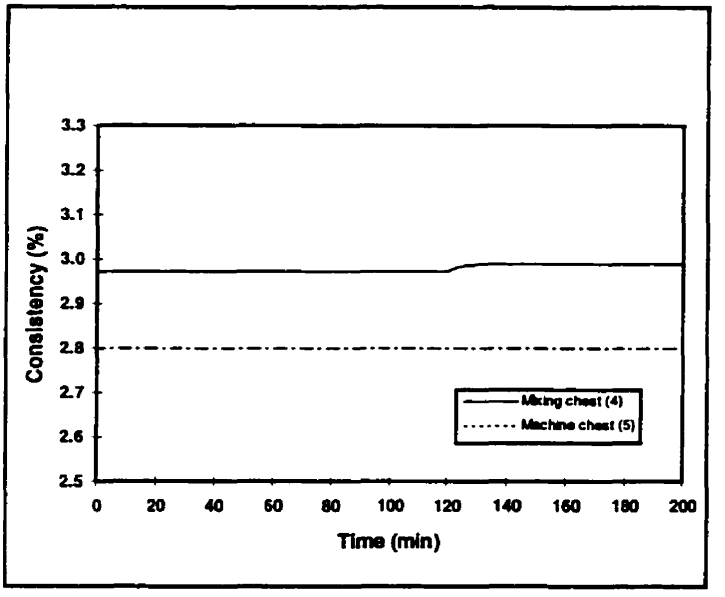

Figure 2.5: Consistency in the mixing and machine chests (single break case).

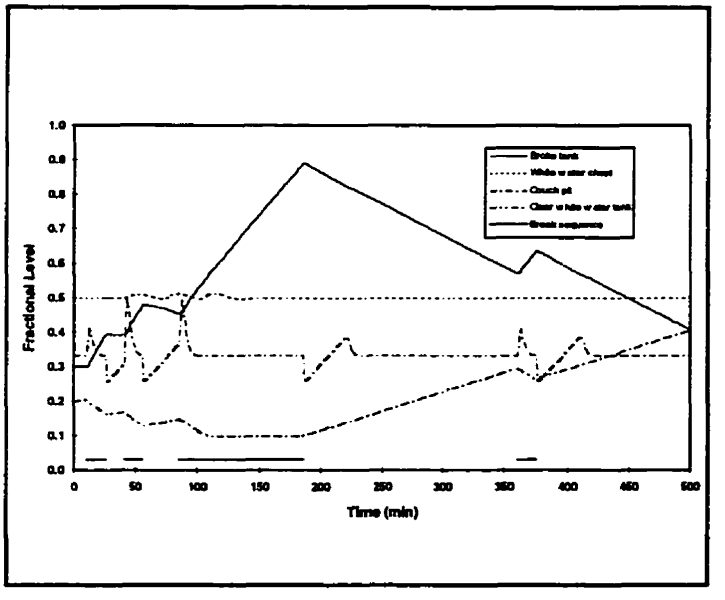

Figure 2.6: Variation of tank levels (multiple break case).

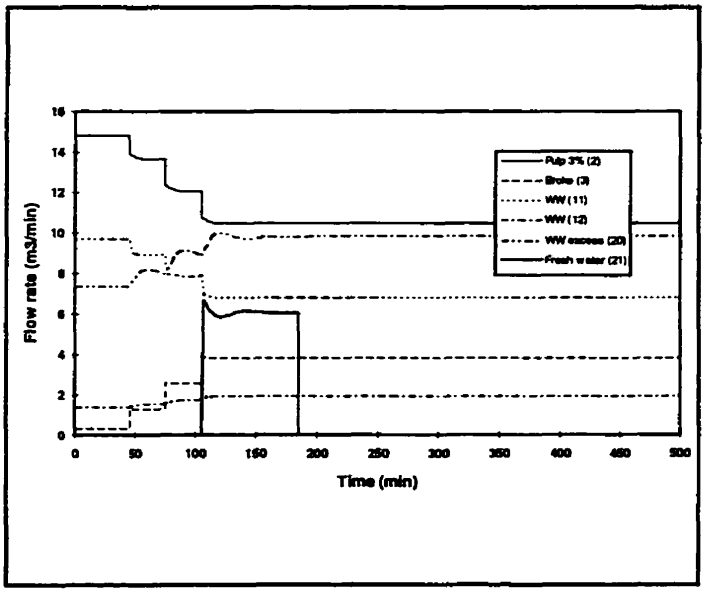

Figure 2.7: Main flow rates (multiple break case).

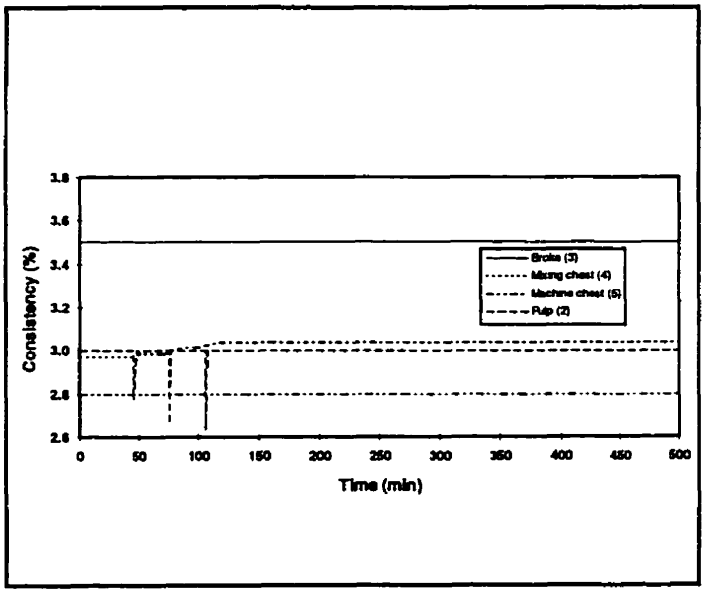

Figure 2.8: Consistencies of major streams around the mixing chest (multiple break case).

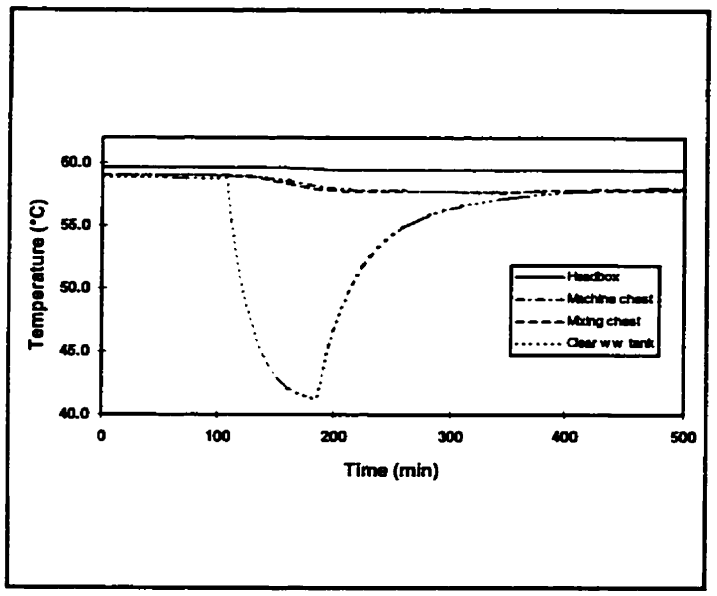

Figure 2.9: Main temperatures in the wet-end (multiple break case).

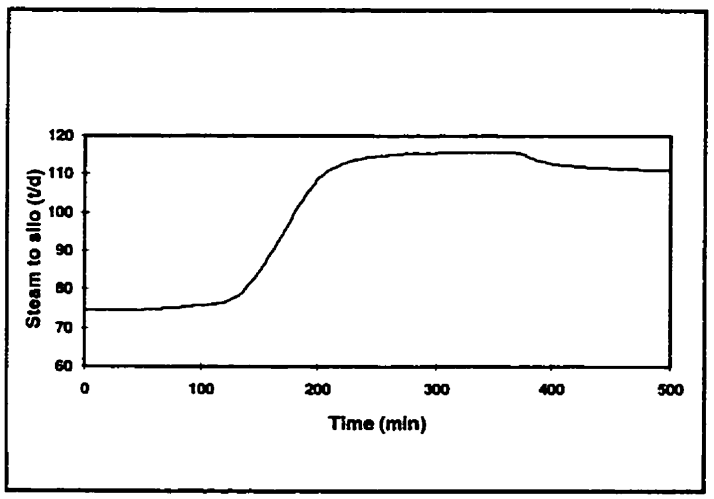

Figure 2.10: Steam consumption (multiple break case).

CHAPITRE III

DYNAMIC ANALYSIS OF FIBROUS MATERIAL AND DISSOLVED SOLIDS DISTRIBUTION IN THE WET-END OF A NEWSPRINT MILL

José-Antonio Orccotoma, Jean Paris and Michel Perrier

Department of Chemical Engineering, École Polytechnique, C.P. 6079, succ. Centre-ville, Montréal, Qc, Canada H3C 3A7

(Submitted to APPITA Journal)

KEY WORDS: Dynamic Modelling, White-Water Network, Wet-End, Retention, Fines, Fibres, Broke, Pulp and Paper

3.1 PRÉSENTATION*

L'analyse du premier chapitre a permis de caractériser le comportement du procédé en réponse à des casses de la feuille dans la machine à papier. Mais il y a encore des questions sans réponse. Par exemple, comment certaines propriétés dans la machine sont affectées lors de la recirculation de cassés. Une étude plus détaillée du procédé a montré que certaines perturbations non surveillées ou non mesurées continuellement dans l'usine affectent le procédé: comme par exemple la qualité de la pâte fournie à la machine et plus spécifiquement sa teneur en fines. La fermeture progressive des circuits d'eau dans les usines de papier journal génère un autre problème: l'accumulation de matières dissoutes dans la pâte.

Cela implique que la modélisation de la pâte doit inclure un composant qui représente la fraction de fines par rapport à la matière fibreuse totale et un autre composant qui représente les solides dissous. Un objectif de ce chapitre est d'établir la distribution de matière de ces composants dans le bout humide de la machine et dans son réseau d'eaux blanches. Un autre problème a été posé: peut-on caractériser l'effet des perturbations en terme d'impact sur la distribution de matière dans le réseau d'eaux blanches?

L'étude en conditions transitoires indique qu'il faut un modèle qui représente, au

---

*Cette section a pour but de faire le lien entre les articles de la thèse.

moins de façon approximative, la rétention première dans la machine. La recherche bibliographique montre que l'augmentation de la teneur en fines dans la pâte à la caisse d'arrivée, cause une réduction de la rétention et vice-versa. Après avoir établi un bilan de matière dans la zone de formation de la machine à papier, on déduit une relation qui décrit ce comportement. Une version préliminaire de ce chapitre a été présentée à la conférence de l'Association canadienne des pâtes et papier - 1996, et retenue pour publication dans la revue Pulp & Paper Canada. Cette version (présentée dans l'Annexe A) n'inclut pas les solides dissous.

3.2 ABSTRACT

A dynamic model of a generic newsprint white-water network that incorporates comprehensive mass balances was developed to study the mass distribution of fines, fibers and dissolved solids. The fibrous material profile indicates a fines buildup as a result of the successive dilutions of the pulp using white-water. The dissolved solids concentration profile depends on the amount of dissolved solids in the pulp and the fresh water added to the wet-end. A retention model was proposed to estimate variations in retention as a function of the headbox fines content; the predicted retention behaviour agrees with observed tendencies. Dynamic simulations were performed to illustrate and quantify the effects of variations of feedstock fines content and broke recirculation on first-pass retention.

3.3 INTRODUCTION

The stock furnished to a newsprint paper machine consists primarily of mechanical or thermomechanical pulp (TMP); it also contains increasing amounts of de-inked pulp as well as recovered fibers, broke, and eventually some chemical pulp. The fines and dissolved solids contents in the pulp delivered to the paper machine are affected by many factors: the stock composition, the use of additives to enhance retention, the degree of system closure, and the white-water network configuration, for example. The current trend in the pulp and paper industry is the implementation of step-wise progressive system closure by reduction of fresh water consumption

and the simultaneous increase of white-water reuse. A direct consequence of this evolution is increased fines and dissolved solids contents in the white-water network.

The object of this work is the study of the mass distribution of fines, fibres and dissolved solids in the wet-end of an integrated newsprint mill and their changes in response to variations in fresh pulp quality (fines content) and broke recirculation rate. As a first step, the steady-state mass distribution of these pulp components was determined; then the dynamics of the system were characterized using a model that takes into account the effect of fines content in the pulp on retention.

3.4 LITERATURE REVIEW

The literature related to fines and dissolved solids is abundant. This section mentions only those studies more directly related to this work. Fines in the pulp are defined as that part of the fibrous material passing through a 75 μm/200 mesh screen when fractionated on a single-screen classifier such as the Britt Jar; or the fraction P200 from a multi-screen classifier such as the Bauer-McNett. The material retained by coarser screens constitutes the fibers (R200). Total dissolved solids are the residue after filtration of an effluent containing fibrous material through a 1.5 μm glass microfiber filter and evaporation of the filtrate to dryness at 105 ± 2°C (Standard Testing Methods CPPA, 1993).

Fines in the pulp affect paper machine operation and the quality of the final product. They have a significant effect on drainage and water removal: drainability increases as fines content decreases (Britt and Unbehend, 1985a). The importance of the effect of fines on optical and strength properties of TMP has been pointed out by Mohlin (1977) and Corson (1980). Depending on their size and shape, fines can play various structural roles: as small particles they fill interstices and bridge gaps in the fiber web; when they are of laminar shape they deposit on the outside of fiber layers and may contribute to forming bonds between fibers (De Silveira et al., 1996). Potential problems such as reduced drainage, wire and felt plugging, which may hinder paper machine runnability (Barnes, 1994), have been associated with fines buildup in white-water systems.

Fines retention in the paper sheet is determined by two distinct mechanisms: mechanical entrapment and colloidal attraction (Britt et Unbehend, 1976 and Pelton et al., 1985). Mechanical entrapment of fines in the interstices of the forming web is essentially a filtration process, and it is believed to be the primary mechanism for the retention of fines in mechanical pulps. Fines will be retained if they are larger than the drainage channels in the web and the wire. The main variables affecting filtration are pulp characteristics, filler content, machine speed, and design of the forming section. The second mechanism, colloidal attraction, is the result of attractive forces between the surfaces of the solids composing the forming web. This

mechanism is affected by chemical factors due to the presence of non-fibrous additives in the furnish (ions resulting from dissolved solids and chemicals added to improve retention).

Studies of retention have contributed to the understanding of the effect of fines content in the furnish. Hergert and Waech (1979), after measuring first-pass retention on 21 commercial newsprint machines, observed that retention is strongly affected by fines content in the headbox regardless of the type of former used. Scott (1986) found a strong negative correlation between headbox fines and both first-pass fines retention and first-pass total fibrous material retention. Similar tendencies were observed by Amiri et al. (1996) after recording the fines content in the headbox and the first-pass retention on a commercial newsprint machine over an extended period of time.

Process streams of commercial paper machines also contain a certain amount of material generally referred to as dissolved solids. Dissolved solids include finely dispersed colloids and truly dissolved material. The organic part is composed of natural materials present in the pulp, such as lignins, pitch and other soluble species, as well as organic additives such as polymers, surfactants, biocides and starches. The inorganic dissolved solids come from the furnish, retention aids, corrosion products and electrolytes present in the fresh water. The most frequent

cations are: Na^{+}, K^{+}, Ca^{+2}, Mg^{+2}, Al^{+3}, $Fe^{+3}$and Mn^{+2}, and the corresponding anions are: Cl^{-}, SO_4^{-2}, SO_3^{-2}, CO_3^{-2} and PO_4^{-3}.

Although cellulose fibers have a negative charge when suspended in water, they do not act as indiscriminate cation scavengers (Alexander and Robbins, 1977). Larger ions with lower charge densities, such as $Al^{+3}$and Fe^{+3}, are more readily adsorbed onto cellulose than smaller and highly charged ions, such as Na^{+}, K^{+} and Mg^{+2}. They are therefore preferentially retained by the paper web and more efficiently purged from the wet-end. The ions with lower affinity tend to remain in the white-water and contribute to the dissolved solids buildup. The composition of dissolved solids varies broadly from mill to mill; their overall concentration is highly dependent upon the degree of system closure achieved by the mill. At high concentrations of dissolved solids, which may be attained by closing the circuits without simultaneously purging contaminants, a number of problems may develop: brightness reversion, adverse effects on sheet tensile index (Heller et al., 1979; Springer, 1985), and detrimental effects on web forming and sheet properties (Rahman, 1987).

Britt and Unbehend (1985b), when studying fibrous material distribution in the wet-end, found a fines buildup in the headbox. In a newsprint paper machine, the headbox fines content is the result of two factors: the initial fines content in the

furnished pulp; and the amount of white-water recirculated during pulp preparation. Disturbances such as variation in pulp quality and changes in broke recirculation after paper breaks may alter the fibrous material and dissolved solids distribution in the wet-end. They may also affect retention in the paper machine, which causes instability in the process and affects product quality (Luquet, 1995; Gess and Kanitz, 1996). Management of white-water and broke inventories may also be affected by such disturbances. An increase in machine speed and modifications to the white-water circuit to reduce fresh water consumption usually impair retention results, or make it necessary to increase the amount of retention agent added (Auhorn, 1981).

Steady-state simulations of white-water networks have been frequently used to evaluate the effect of closure strategies. Noël et al. (1993) studied the reduction of fresh water consumption and the side effects of some closure strategies such as the reuse of white-water on the paper machine showers and modifications to the white-water circuit. Asselman et al. (1996) identified potential energy savings vial the reuse of some process effluents and studied their side effects on the dissolved solids buildup at the headbox.

Dynamic simulation is used to predict the effects of various disturbances on the process operation and to test control strategies. Studies by Croteau and Roche (1987)

and Bussière et al. (1992) analyzed issues surrounding white-water and broke inventories management. An application of dynamic modelling for process control is presented by Jones and Koepke (1994); their study examined feedback and feedforward techniques used to control pulp properties and basis weight in a two-ply paper machine. The characterization of the dynamics in a generic white-water circuit and the effect of the process design in rejecting disturbances, such as sheet breaks in the paper machine, have been studied by Orccotoma et al. (1997).

These dynamic studies have considered the effect of fines on first-pass retention. As we will see later, pulp quality variations, white-water management and broke handling may disturb the fines distribution in the wet-end, which in turn affects retention. A retention model therefore becomes a critical aspect in modelling the forming section of a paper machine.

3.5 PROCESS DESCRIPTION

The process flowsheet, Figure 3.1, represents the wet-end of a 600 t/d capacity single-line newsprint mill, and includes the following main elements: the paper machine forming zone, the stock preparation area, the machine white-water network and the broke repulping system. The fresh pulp to the process, thermomechanical pulp at 8% consistency, is initially stored in the high consistency tank. It is then mixed with recycled fibers from the broke tank and the saveall in the mixing chest. After a further dilution to

2.8% consistency, the pulp is homogenized in the machine chest, then cleaned and screened, and by further dilution it reaches its final consistency of 0.9% when delivered to the paper machine.

Two main white-water streams leave the paper machine forming section. The first, of higher consistency, circulates to the silo, is mixed with the pulp in the mixing pump and returns to the paper machine immediately (short recirculation loop). The second white-water stream, of lower consistency, is collected in the white-water chest and redistributed in the mill for pulp dilution (long recirculation loop).

During normal machine operation, only the wet trimmings (representing approximately 3% of the total paper production) are collected in the couch pit. When a break occurs, the paper sheet is diverted to the couch pit and clear white-water is added for dilution. The repulped broke is then returned to the mixing chest via the broke storage tank. Fresh water is added to the wet-end only in the paper machine showers, at a rate of 10 m^3/t of product.

The process is equipped with a control system, composed exclusively of PI controllers, designed to maintain the uniformity (flow rate, consistency, temperature) of the pulp supplied to the paper machine, to avoid tank overflows, and to minimize fresh water requirements during process disturbances. Design and

evaluation of the control system of this process has been presented and evaluated previously by Orccotoma et al. (1997). Variables such as first-pass retention and basis weight have been kept uncontrolled to study their evolution in response to disturbances. Delays introduced by the piping system, valves and instrumentation have been ignored.

3.6 DYNAMIC MODELLING

A dynamic model of this process, in which only water and fibers were accounted for, was developed and presented in a previous study (Orccotoma et al., 1997), which aimed to characterize the dynamic response of the process to wet breaks and the management of white-water inventories as well as evaluate the performance of a wet-end design and its control system in rejecting disturbances. In the present study, additional mass balances are included for the fines and the dissolved solids. Also, the model of the paper machine forming section accounts for the effect of fines content in the headbox on first-pass retention.

3.6.1 Model assumptions

The pulp consists of four components: water, fines (P200), fibers (R200) constituting the fibrous material, and the total dissolved solids. It is assumed that the dissolved solids follow the aqueous phase (no adsorption on the fibrous material) in all steps of the process. The pulp density and specific heat, supposed to be consistency-

dependent, were obtained by using the following mixing rules:

$$\rho = \frac{1}{\frac{1 - C}{\rho_{H_2O}} + \frac{C}{\rho_{FIB}}} \tag{3.1}$$

$$C_P = C_{P\,H_2O}\,(1 - C) + C_{P\,FIB}\,C \tag{3.2}$$

In equations 3.1 and 3.2, C is the pulp consistency and the subscripts H_20 and FIB refer to the water and the total fibrous material respectively. The selected values for the fibrous material (supposed as cellulose) were 1.15 t/m^3 and 1.2 kJ/(kg °C) for the density and specific heat respectively.

It is assumed that the process dynamics is governed by the reservoirs' holding time and that each reservoir can be adequately represented as an ideal continuous stirred tank. For sections such as cleaners, screens and the paper machine forming section, the dynamics are negligible. In this process, steady-state is ideally defined as that time in which there are no paper breaks and the amount of broke reused is equal to the trimmings generated in the paper machine.

The data necessary for model calibration are drawn from Asselman et al. (1996) in

which a steady-state simulation of an actual mill was established and validated on the basis of an extensive sampling program. The fines percentage in the fresh pulp is 29.4%; the white-water consistencies are 0.52% and 0.34% for the short and long recirculation loops respectively; dissolved solids content in the fresh pulp and fresh water is 7600 ppm and 100 ppm respectively. The Standard Testing Methods of the Canadian Pulp and Paper Association (1993) were used to determine the consistency, the fiber length classification and the total dissolved solids of the pulp.

3.6.2 First-pass retention modelling

The first-pass retention of a material is the fraction of that material fed to the machine through the headbox slice that is retained in the paper sheet. First-pass retention is very important to the papermaker because it influences paper machine runnability, material loss levels, and chemicals efficiency. First-pass retention is usually derived from steady-state material balances around the forming section and is expressed by the following equation, where T_w and T_h are the total fibrous material in the web and the delivered stream through the headbox slice respectively:

$$R = \left(\frac{T_w}{T_h}\right) 100 \tag{3.3}$$

It is generally not practical to measure T_w and T_h in paper mills; for that reason, the following equation is frequently used as an estimation of first-pass retention:

$$R = \left(\frac{C_h - C_{ww}}{C_h} \right) 100 \tag{3.4}$$

where C_h and C_{ww} are the consistencies in the headbox and the white-water respectively. The derivation of Equation 3.4 is based on two main hypotheses: first, there is a single white-water stream of consistency C_{ww} leaving the forming section; and second, that all the water flowing from the headbox is recovered in the white-water stream. In commercial paper machines there is more than one white-water stream leaving the forming section and they have different consistencies and flow rates. It is difficult to estimate an equivalent single average white-water stream; for this reason Equation 3.4 may not provide an accurate value of the true retention as defined by Equation 3.3.

By considering the fiber size distribution in the pulp, the total fibrous material in the web may rewritten as follows:

$$T_w = \left(\sum_i^n M_i \right)_w \tag{3.5}$$

Where M_i is the mass associated to the i-th fiber fraction in the pulp. By defining the partial retention of each fraction $R_i = 100\ (M_i)_w / (M_i)_h$ and the mass fraction $Y_i = (M_i)_h / T_h$ of each fiber component in the headbox, the following relationship can be

derived:

$$R = \sum_{i}^{n} Y_i R_i \tag{3.6}$$

which represents the partial contribution of each fiber fraction on retention. In this study, only two fraction sizes are considered, those of the fines (P200) and fibers (R200), denoted by the subscripts f and F respectively. For this case ($n = 2$) Equation 3.6 simplifies as follows:

$$R = (R_f - R_F) Y_f + R_F \tag{3.7}$$

If it is assumed that R_F and R_f are constant, Equation 3.7 gives a simple linear relationship between the total fibrous material retention R and the fines content in the headbox Y_f. Since long fibers are preferentially retained on the wire while forming the web, $R_F > R_f$, the slope with respect to Y_f in Equation 3.7, is negative. This is in agreement with the experimental tendencies observed by Hergert and Waech (1979), Scott (1986) and Amiri et al. (1996). The hypothesis that the fibers first-pass retention is essentially constant and independent of the fines content in the headbox is well justified, since fiber size essentially determines R_F. Scott's results, however, indicate a strong negative correlation between fines content and first-pass retention; thus the hypothesis of constant fines retention, R_f, should only be applied in the vicinity of a given operating point.

To determine the values of R_f and R_F, a detailed mass balance requiring a careful sampling program must be performed. Experimental results from Graff (1991) have been used to determine R_f and R_F and to observe whether their difference is compatible with the slope in Equation 3.7. These data were obtained on a pilot paper machine after measurement of pulp and white-water consistencies, flow rates and fines content. During the experiments, the paper machine speed was varied from 400 m/min to 1000 m/min, the headbox consistency from 0.62% to 0.74%, the basis weight from 38.5 to 51.8 g/m^2, and the fines content in the headbox from 26.1% to 30.7% of the total fibrous material. Considering that in a commercial paper machine the headbox consistency should be kept constant, we have selected only the data for which the headbox consistency falls between 0.621% and 0.635%, as indicated in Table 3.1.

Retention of fines, fibers and total fibrous material was calculated from Graff's experimental data and plotted versus fines content in the headbox (Figure 3.2). Fiber retention is clearly independent of fines in the headbox, while fines retention values are more dispersed and without a clear tendency. The effect of fines on retention of the total fibrous material seems to indicate a negative tendency, but a statistical analysis of the data showed that the experimental tendency slope (-55.3%) in Figure 3.2 is not significantly different from zero (at α = 5%); it has a large confidence interval because of the dispersion. For this reason, the slope values of Equation 3.7

(varying between -43.0% and -48.7%) obtained from the Graff's experimental results, given in Table 3.1, are not significantly different from the value obtained by regression of the data. The fact that we have few experimental points, obtained over a wide range of machine conditions, makes a definitive conclusion difficult; for this reason Equation 3.7 should be used as a retention tendency estimator.

3.6.3 Paper machine forming section

Two main zones of water removal can be identified in the forming zone of a paper machine (Britt et al., 1985a). In the first zone the main mechanism of water removal is some form of drainage. In the second, or vacuum zone, water is displaced from the wet sheet by air in response to a vacuum. A newsprint paper machine generally has multiple white-water outlet streams flowing to the silo and the white-water chest. It has been assumed that the white-water leaving the drainage zone is entirely collected into the silo (short recirculation loop), while the white-water from the vacuum zone and the fresh water used in the showers are collected in the white-water chest and used in the long recirculation loop, as indicated in Figure 3.3.

Equation 3.7 must be applied to each zone to obtain the overall machine first-pass retention. The results, presented in Table 3.2, were obtained by steady-state mass balances over the simulated process. The retention profiles for the two zones of the former are displayed on Figure 3.4. The retention in the drainage zone (R^I) is lower

than in the vacuum zone (R^{II}) because the pulp entering the former is rich in fines, which easily pass through the fabric. In the vacuum zone, the web is almost formed, so the remaining fines are more easily entrapped and retained in the web. During simulations, it has been assumed that all other factors having influence on retention (i.e., headbox flow rate, pulp consistency, wet-end chemistry) are constant. Paper machine operation implies careful control of the basis weight by manipulation of the thick-stock flow rate. To assess the effect of fines on retention, this control loop has been opened by keeping the thick-stock flow rate constant.

3.6.4 Algorithm

The model, including ordinary differential and algebraic equations, was solved using Aspen Technology's SPEEDUP 5.4 simultaneous dynamic simulator. The process simulation consists of solving the system of differential and algebraic equations (DAEs) representing all pieces of equipment for given initial conditions. The integration algorithm is a modified Gear's method. The process flowsheet in Figure 3.1, comprising 45 process streams with four components, 15 process units, and 13 control loops, was represented by approximately 500 differential and algebraic equations. The software was installed on an IBM Risk 6000 platform. The execution time was approximately 2 min for a real time period of 500 min.

3.7 RESULTS AND DISCUSSION

Four locations were selected to study fibrous material and dissolved solids distributions in the wet-end: the stock tank, which is the entry point of the fresh-pulp stream from the pulping mill; the machine chest, in which the fresh pulp is mixed with the broke and the fibers recovered in the saveall; the headbox, where the pulp at target consistency is ready for injection into the paper machine; and the paper web leaving the forming zone, with a fibrous composition that will remain almost unchanged during the subsequent paper pressing and drying process.

3.7.1 Fibrous material distribution

The steady-state fibrous material distribution in the network (Figure 3.5) shows a considerable increase in the mass of fibers being transported as the pulp flows from the stock tank to the headbox. This increase is almost entirely due to the important amount of fines not retained in the former, which are recycled in a closed loop. The fines buildup reaches its highest value at the headbox; this effect is the result of the low fines retention in the machine, the successive pulp dilutions and the recirculation of many white-water streams as previously shown in Figure 3.1. White-water from the machine contains mainly the fines that were not retained in the paper web. Therefore, all the processes involving dilution will preferentially increase the fines content in the main pulp stream. For a fines content of 29.4% in the fresh feed, the fines content observed in the headbox is 63.7%. By contrast, the paper

web leaving the forming section of the paper machine contains less fines (27.4%) and less fibrous material (582 t/d) than the fresh pulp entering the process (29.4% fines; 600 t/d). These differences are explained by the low fines retention in the web causing the preferential distribution of fines in the white-water, and the rejects leaving the wet-end from the secondary screen and the cleaners system. In terms of retention, we have obtained 20.9% and 97.4% for fines and fibers respectively and a total fibrous material first pass retention of 48.7%.

3.7.2 Dissolved solids distribution

Dissolved solids distribution in the wet-end is directly related to the initial solids content of the fresh feed supplied (high level of dissolved solids) and the amount of fresh water introduced into the process (low level of dissolved solids). Fresh water is added to the wet-end in the showers to clean the fabric, and occasionally some fresh water is also used to dilute the broke. Other wet-end streams have a dissolved solids content between these two limits. In Figure 3.6, the dissolved solids profile is the result of the increasing degree of dilution during the pulp preparation. This result is confirmed by the low slope profile between the machine chest and the headbox; this tendency is in agreement with that observed by Asselman et al. (1996) in an actual mill.

Increasing the system closure will affect the dissolved solids distribution by shifting

the values in Figure 3.6 upward. An example of closure strategy would be the partial replacement of the fresh water in the paper machine showers by clear white-water. The effect of this change will be an increase in dissolved solids in the white-water streams leaving the paper machine, then a progressive increase in the pulp; finally, as white-water is recycled back to the refiners area, as in integrated newsprint mills, the fresh pulp coming into the pulp preparation section will have a higher dissolved solids content. As wet-end chemistry is altered by these changes, paper machine retention and properties of the produced paper may also be affected.

3.7.3 Dynamics of changes in the feed fines content

To determine the impact of the variability of the fines content in the pulp, a step change from its initial value of 29.4% to 30.9% was simulated (5% relative value). Under the hypothesis that all reservoirs behave as ideal stirred tanks, the transient response becomes more and more sluggish as pulp flows from one reservoir to another. The final effect on the headbox fines content is an increase from its initial steady-state value of 63.7% to 64.8%, as indicated in Figure 3.7. This increase, which represents approximately 13 t/d of fines in the headbox stream, causes a drop in the paper machine first-pass retention from 48.7% to 47.9%. More fines are passing through the fabric, thus increasing the white-water consistency and simultaneously reducing basis weight. Even though the control system was designed to maintain the pulp consistency constant, a slight variation of this property is observed. The

main pulp stream is mixed with white-water from the silo, in the short recirculation loop, after the last consistency control loop in the machine chest.

3.7.4 Dynamics of changes in broke recirculation

Changes in the broke recirculation rate may alter the wet-end equilibrium. When the circuit is in steady state, the paper web leaving the forming section has a lower fines content than the fresh pulp (Figure 3.5). Consequently, increasing the broke flow rate to the mixing chest causes a lower fines content in the main pulp stream and an increase in retention. This tendency may be different in mills where the broke pulp is diluted with white-water instead of clear white-water from the saveall, as described in Figure 3.1.

The sequence of operations described here was simulated starting from stationary conditions where only the web trimmings are recirculated. It is assumed that a 40-minute wet break occurs at time t = 20 min; the broke is repulped and stocked in the broke tank. At time t = 60 min the broke reuse rate is abruptly increased to 20% of the total feedstock. Figure 3.8 shows a quick rise in the broke tank level during breaks. Then, as broke is recirculated, the level declines slowly and the fines profile is gradually altered, resulting in a lower headbox fines content. As predicted by Equation 3.7, the retention increases. The observed oscillation (within the small box

on the retention curve) may be explained by considering the white-water flow rates evolution following the change in broke recirculation rate, as illustrated in Figure 3.9. The white-water excess directed to the saveall increases when the broke is recirculated at a higher rate and the white-water requirement for fresh pulp dilution is decreased. In the saveall, the amount of recovered fibers (essentially fines) increases. When these recovered fibers are returned to the mixing chest, they temporarily create an effect opposite to that of the broke—hence the fluctuating behaviour observed on the retention. The lower graph in Figure 3.8 indicates a discontinuity in the basis weight during the break and an increase from its steady-state value of 48.8 g/m^2.

The distribution of dissolved solids is also affected when broke reuse rate is increased; the results obtained are based on the hypothesis that there is no mass transfer between any component of the dissolved solids and the surface of fibers. The decrease in dissolved solids content after increasing broke reuse rate may be explained by their lower concentration in the broke.

3.7.5 Effect of broke recirculation control

In newsprint mills, when production is disrupted by frequent paper breaks, it may become difficult to maintain the stability of the network. Process restrictions and equipment dimensions often limit the possibilities of white-water inventories

management, so a compromise must be found between the acceptable broke amount in the furnish and the optimum management of inventories.

The purpose of the next simulation is to compare an automatic and a manual strategy for broke recirculation and their effects on retention. The automatic method, illustrated in Figure 3.10, uses a feedback system whereby the broke tank level is controlled by manipulating the broke fraction to the mixing chest. Tuning of the PI level controller was done using the average level control method (Marlin, 1995). This technique limits the changes in the manipulated variable (broke flow rate to mixing chest) to only small increments while allowing larger variations in the broke tank level, so as to minimize the effect of disturbances on the process when recycling broke. In the manual technique, the broke rate is increased in step changes of 10% each 30 minutes. A severe paper breaks sequence was used as input. The results described in Figure 3.11 indicate that broke tank overflow is avoided in both cases, but the larger broke recirculation changes in the manual control case cause higher disturbances in the wet-end that affect retention and basis weight. The amount of broke that must be added to the feedstock usually depends on the initial broke inventory and how fast it can be recycled without causing additional disturbances or affecting paper properties. Minimum effect on the wet-end would be achieved if a constant broke reuse rate were used. An average broke recirculation rate may be approximated after taking into account the broke tank capacity and a

good estimate of the average break time under current paper machine conditions.

3.8 CONCLUSION

This paper has described the fibrous material and dissolved solids distribution in the wet-end of a newsprint mill and the dynamic effects of disturbances in fibrous material distribution and paper machine first-pass retention. A summary of main results is as follows:

- Fines buildup in the headbox furnish is the consequence of low fines retention and the subsequent white-water reuse to dilute the main pulp stream.

- Dissolved solids profile in the network is bounded between two values. The upper limit is imposed by the dissolved solids content in the fresh pulp, while the lower value depends on the amount of fresh water added to the wet-end. Increasing closure will shift the profile upward, eventually affecting the properties of the paper produced.

- The retention model presented in Equation 3.7 predicts an inverse effect of fines on first-pass retention, in agreement with the observed tendencies. The two retention parameters R_F and R_f may be estimated for any paper machine after detailed steady-state mass balances.

- By using the proposed retention model, it has been possible to study the effects of two disturbances (fines variations in the feed stock and changes in the amount of broke in the furnish) and their consequences on fibrous material distribution and first-pass retention.

- When studying broke recirculation the best option is to keep the amount of broke in the furnish as constant as possible to minimize disturbances on the process; a feedback controller tuned using the concept of average level control proved appropriate for handling broke inventories by manipulation of the broke reuse rate.

3.9 ACKNOWLEDGEMENTS

The authors wish to thank Alain Roche, Reza Amiri and John Wood of Paprican for their valuable comments. The collaboration of Delphine Stiée, who assisted during the model development, is appreciated. This work was supported by a Paprican scholarship through the Carl Winkler Memorial Foundation and the Natural Sciences and Engineering Research Council of Canada.

3.10 NOMENCLATURE

C = consistency, %

Cp = specific heat, kj/(kg °C)

M_i = i-th fiber fraction, mass flow rate, t/d

R = first-pass retention, %

R_i = i-th fiber fraction retention, %

T = total fibrous material mass flow rate, t/d

Y_i = i-th fiber fraction in the headbox

Y_f = fines fraction in the headbox

Greek letters

α = level for I type error

ρ = pulp density, t/m^3

Superscripts

I = paper machine first forming zone

II = paper machine second forming zone

Subscripts

f = fines (P200)

F = fibers (R200)

h = headbox

n = size of fiber fraction in pulp

w = paper web

ww = white-water

3.11 REFERENCES

Alexander, D. S., and R. J. Dobbins, "The Buildup of Dissolved Electrolytes in a Closed Paper Mill System," Tappi Journal **60** (12), 117-120 (1977).

Amiri, R., T. Murray, J. Wood, D. Bartlett, B. Chisholm and S. Rendell, "Interaction of Pulp Quality and Papermaking: Effects on Sheet Structure and Linting," Paprican PPR-1200 (1996).

Asselman, T. and Paris, J., "Fermeture des circuits d'eau dans les usines intégrées de papier journal: Étude de cas," Paprican PGRLR 656 (1996).

Auhorn, W., "Web Formation, Drainage, and Drying Improved by Means of Chemical Products," Wet-End Paper Technology Symposium, Munich, Mar 1981.

Barnes, E. T., "Water Quality Requirements for Pulp and Paper Processes," in *Water Use Reduction in the Pulp and Paper Industry*, 1st ed, Vancouver: Canadian Pulp and Paper Industry, 1–10 (1994).

Britt, K. W. and J. E. Unbehend, "New Methods for Monitoring Retention," Tappi Journal **59** (2), 67–70 (1976).

Britt, K. W. and J. E. Unbehend, "Water Removal During Paper Formation," Tappi Journal **68** (4), 104–107 (1985a).

Britt, K. W. and J. E. Unbehend, "Fiber Fractionation in Paper Machine Systems," Tappi Journal **68** (9), 114–117 (1985b).

Bussière, S., A. A. Roche and J. Paris, "Analysis and Control of White Water Network Perturbations in an Integrated Newsprint Mill," Pulp & Paper Canada **93** (4), T97–T100 (1992).

Corson, S. R., "Fibre and Fines Fractions Influence Strength of TMP," Pulp & Paper Canada **81** (5), T108-T112 (1980).

Croteau, A. P., and A. A. Roche, "Study of Broke Handling and White Water

Management Using a Dynamic Simulation," Pulp & Paper Canada **88** (11), T420–T423 (1987).

De Silveira, G., X. Zhang, R. Berry and J. R. Wood, "Location of Fines in Mechanical Pulp Handsheets Using Scanning Electron Microscopy," Journal of Pulp and Paper Science **22** (9), J315–J320 (1996).

Gear, C. W., "Simultaneous Numerical Solution of Differential-Algebraic Equations," IEEE Trans. Circ. Theory, CT–18(1):89 (1971).

Gess, J. M., and R. A. Kanitz, "Monitoring the Stability of a Paper Machine," Tappi Journal **79** (4), 119–126 (1996).

Graff, S., "Analyse de la distribution de matière dans la partie humide d'une machine à papier," M.Sc.A. thesis, École Polytechnique, Montreal (1991).

Heller, P., W. E. Scott, and A. M. Springer, "Potential Operational Problems Under Conditions of Complete Water Reuse," Tappi Journal **62** (12), 79–84 (1979).

Hergert, R. E., and T. G. Waech, "Newsprint Furnish Solids Retention," Tappi Journal **62** (11), 79–81 (1979).

Jones, G. L., and S. A. Koepke, "Simulation of Dynamics and Control of a Two-Ply Paper Machine," Tappi Journal **77** (8), 111–120 (1994).

Luquet, G., "Production Stability on Paper Machines and Pulp and White Water Circuits," Tappi Journal **78** (10), 256–258 (1995).

Marlin, E. T., *Process Control: Designing Processes and Control Systems for Dynamic Performance,* New York: McGraw-Hill, 588–593 (1995).

Mohlin, U. B., "Distinguishing Character of TMP," Pulp & Paper Canada **78** (12), 83–88 (1977).

Nöel, A., J. Paris and A. Roche, "Simulation of White Water Management Strategies for an Integrated Newsprint Mill," Pulp & Paper Canada **94** (11), T383–T386 (1993).

Orccotoma, J. A., J. Paris, M. Perrier and A. A. Roche, "Dynamics of White Water Networks during Web Breaks," manuscript accepted for publication, Tappi Journal (1997).

Pelton, R. H., B. D. Jordan, and L. H. Allen, "Particle Size Distributions of Fines in

Mechanical Pulps and Some Aspects of their Retention in Papermaking," Tappi Journal **68** (2), 91–94 (1985).

Rahman, L., "The Mechanism of Fines and Filler Retention in Newsprint Furnishes," Tappi Journal **70** (10), 105–112 (1987).

Scott, W. E., "Fines Management and Control in Wet-End Chemistry," Tappi Journal **69** (11), 30–34 (1986).

Speedup User Manual—Release 5.4, Cambridge: Aspen Technology Inc. Ed. (1993).

Springer, A. M., J. P. Dullforce, and T. H. Wegner, "The Effects of Closed White Water Systems Contaminants on Strength Properties of Paper Produced from Secondary Fibers," Tappi Journal **68** (4), 78–82 (1985).

Standard Testing Methods. Technical Section. Canadian Pulp and Paper Association, Montreal: CPPA (1993).

TABLE 3.1: Selected experimental conditions and retention values calculated from Graff (1991).

Exp	Experimental conditions				Retentions[1] (%)			
	Consistency (%)	Basis weight (gr/m^2)	Speed (m/min)	Fines fraction	R	R_F	R_f	$(R_f.R_F)$
1	0.627	44.4	800	0.265	84.39	97.32	48.58	-48.74
2	0.629	38.5	800	0.268	85.07	97.30	51.72	-45.58
3	0.621	46.0	400	0.265	86.21	97.61	54.64	-42.97
4	0.621	N.A.	1000	0.272	85.50	97.33	53.78	-43.55
5	0.621	N.A.	1000	0.261	85.47	97.47	51.46	-46.01
10	0.635	44.4	600	0.266	84.89	97.82	49.14	-48.68
11	0.630	40.4	600	0.287	83.49	N.A.	N.A.	N.A.
12	0.638	44.9	800	0.288	84.45	N.A.	N.A.	N.A.

[1]All retentions are referred to the machine former zone.

TABLE 3.2: Sectional Retention.

Parameter	Drainage zone	Vacuum zone
R_f (%)	36.2	57.8
R_F (%)	97.7	99.7
R (%)	58.5	83.2
Y_f	0.637	0.394[1]

[1]Fines content in the web at the entrance of the vacuum zone

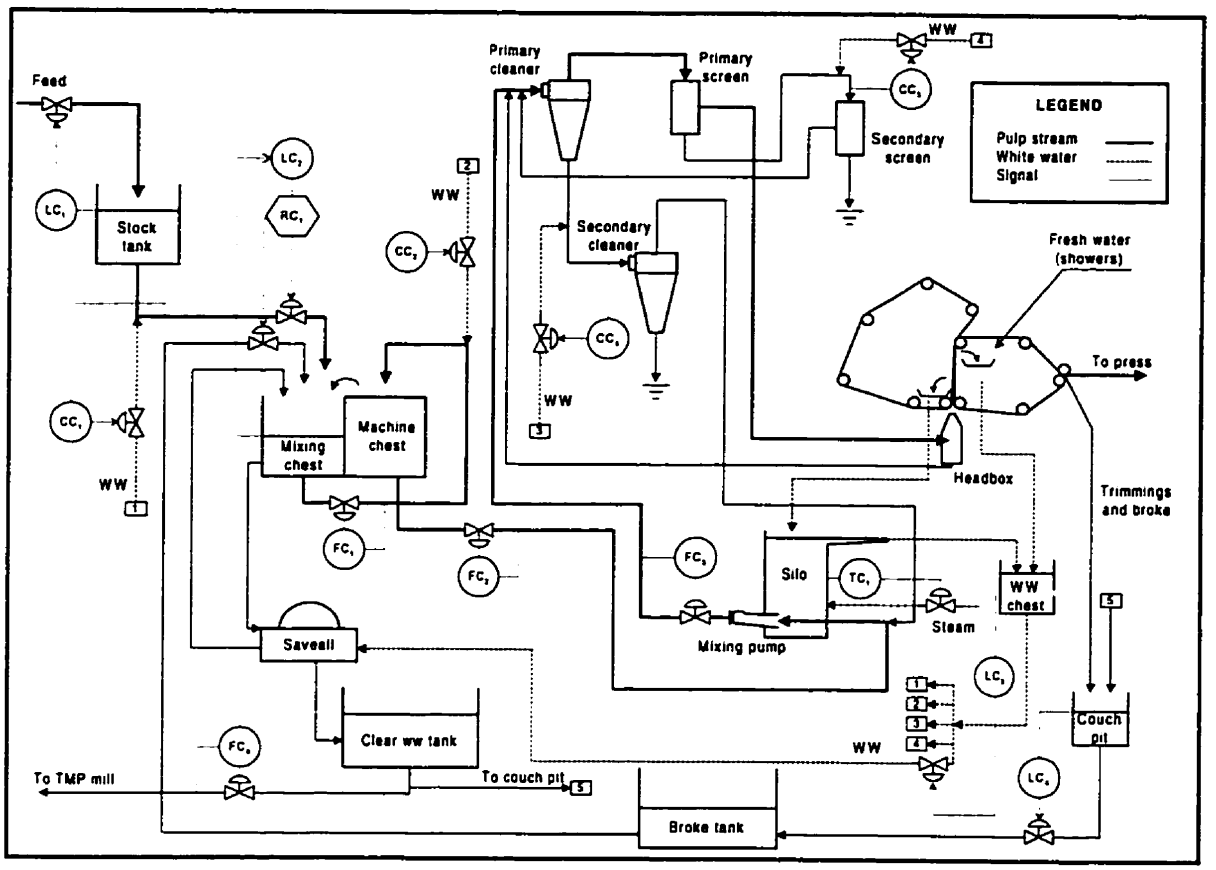

Figure 3.1: Wet-end flowsheet

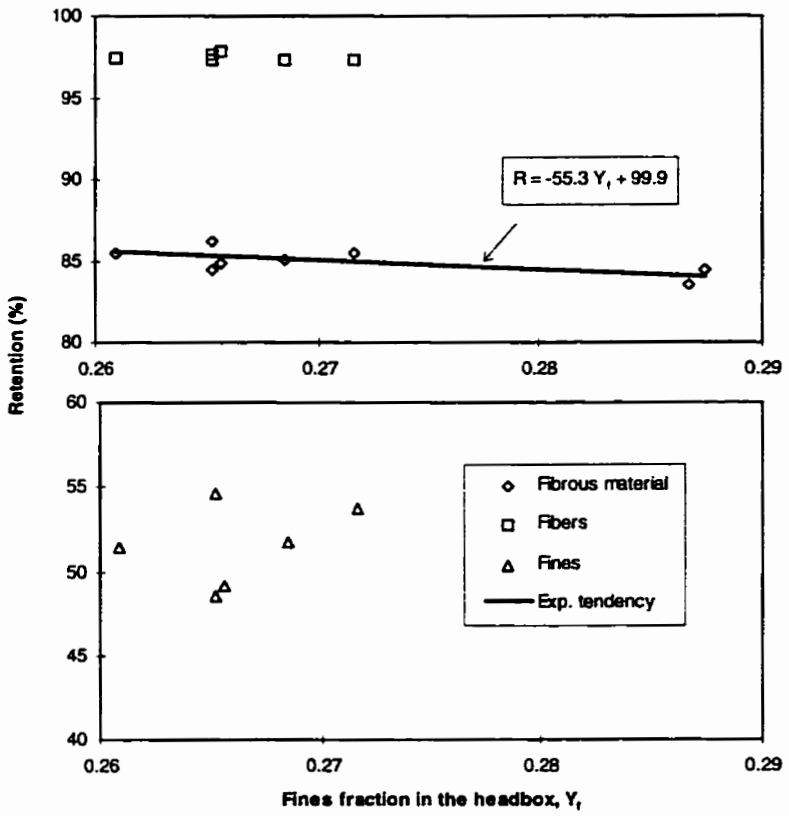

Figure 3.2: Fines content in the headbox and retention, from Graff (1991)

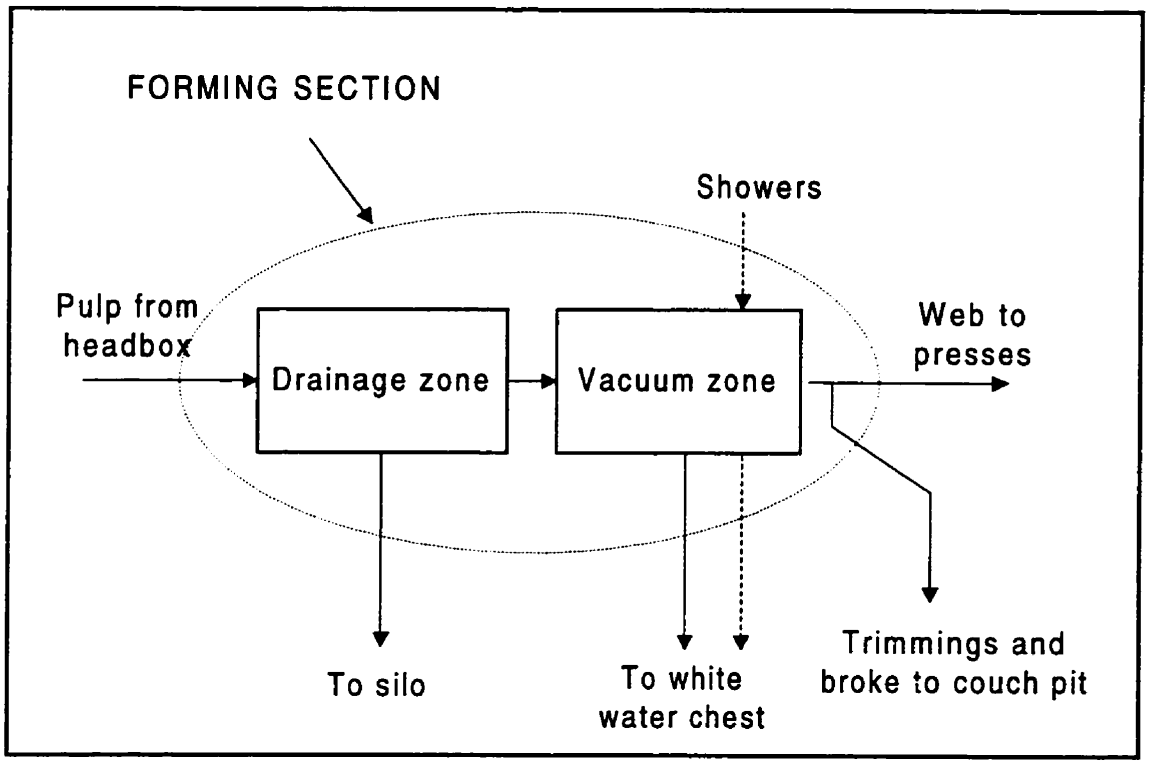

Figure 3.3: Simplified diagram of the paper machine forming section

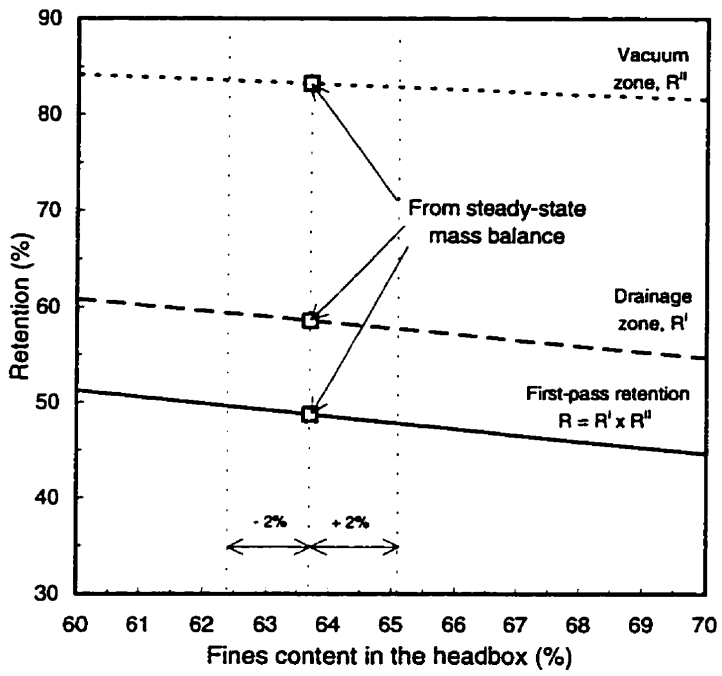

Figure 3.4: First-pass retention as a function of fines content in the headbox.

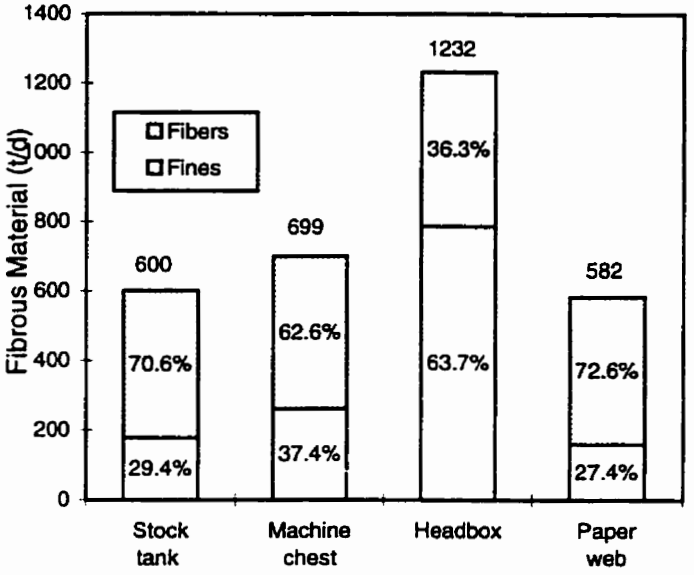

Figure 3.5: Fibrous material distribution in the network.

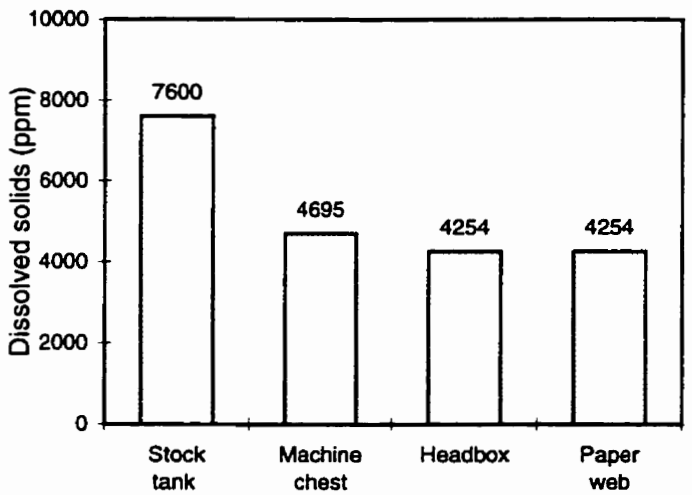

Figure 3.6: Dissolved solids distribution in the network.

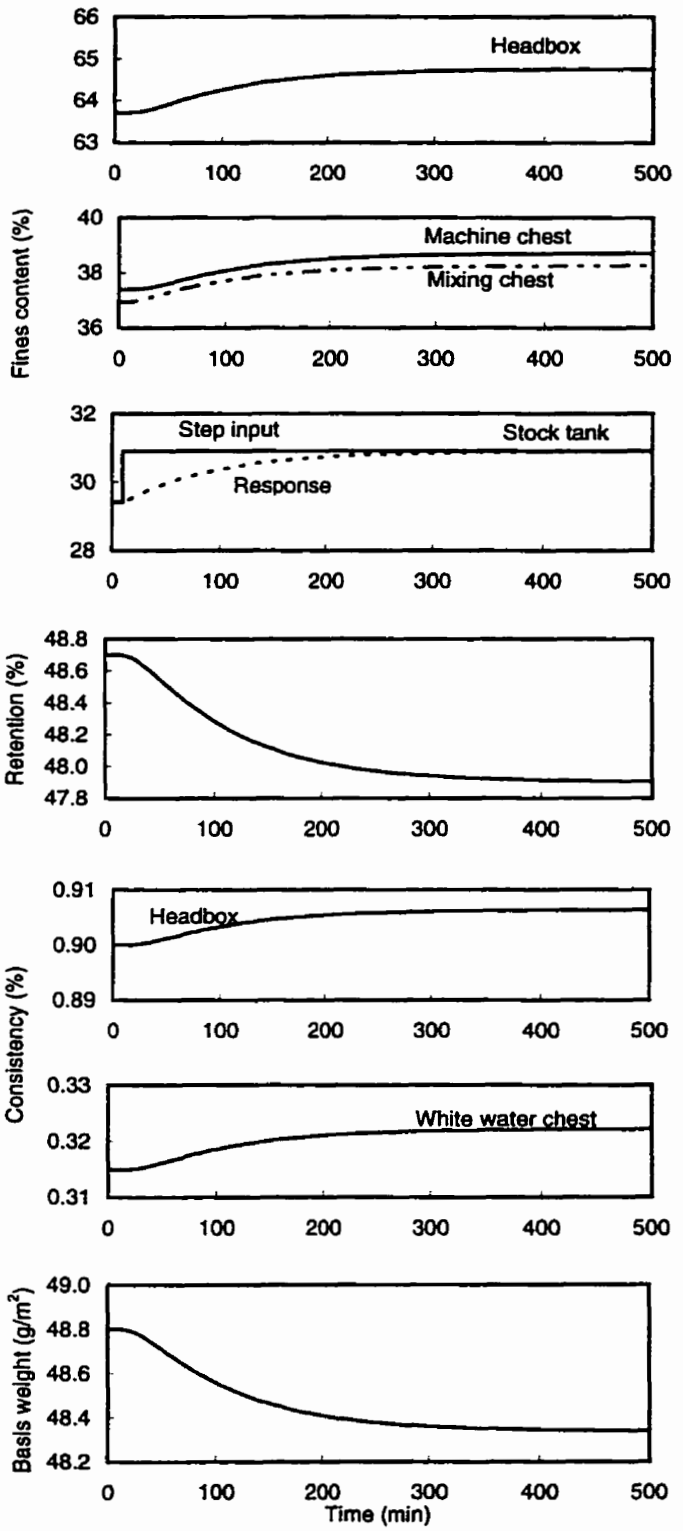

Figure 3.7: Dynamic effects of changes in the fines content of the fresh pulp.

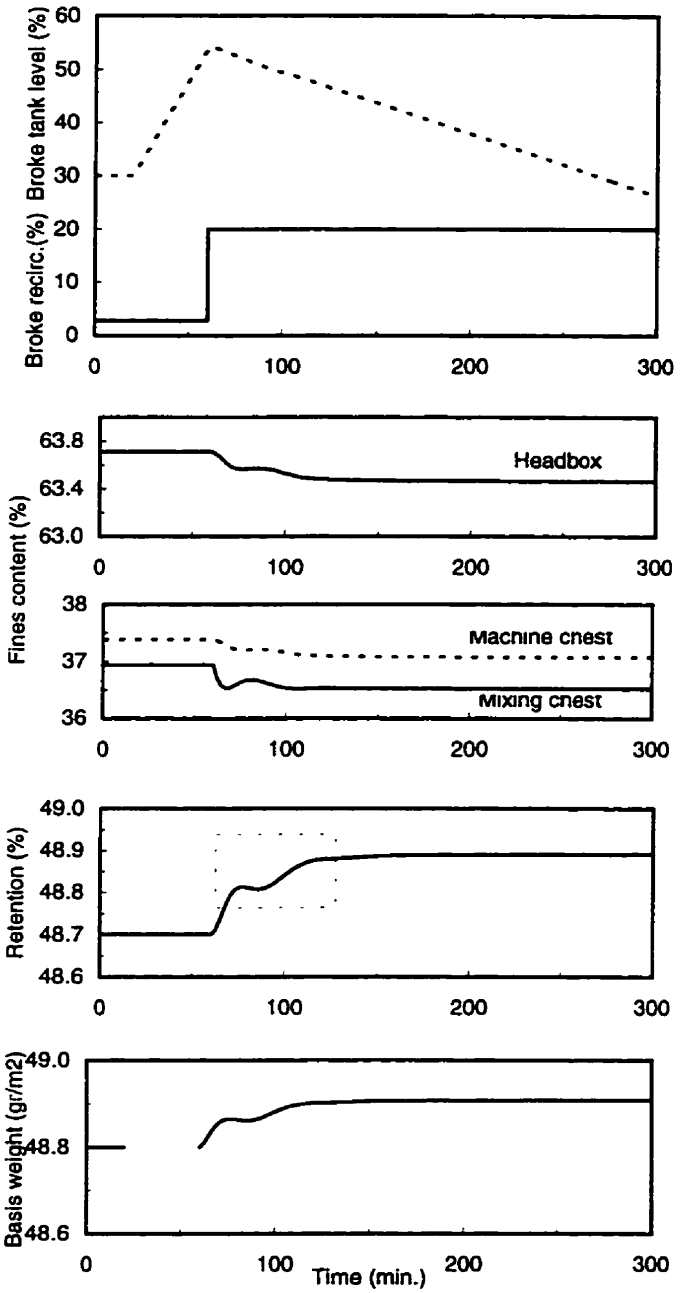

Figure 3.8: Change in broke recirculation rate.

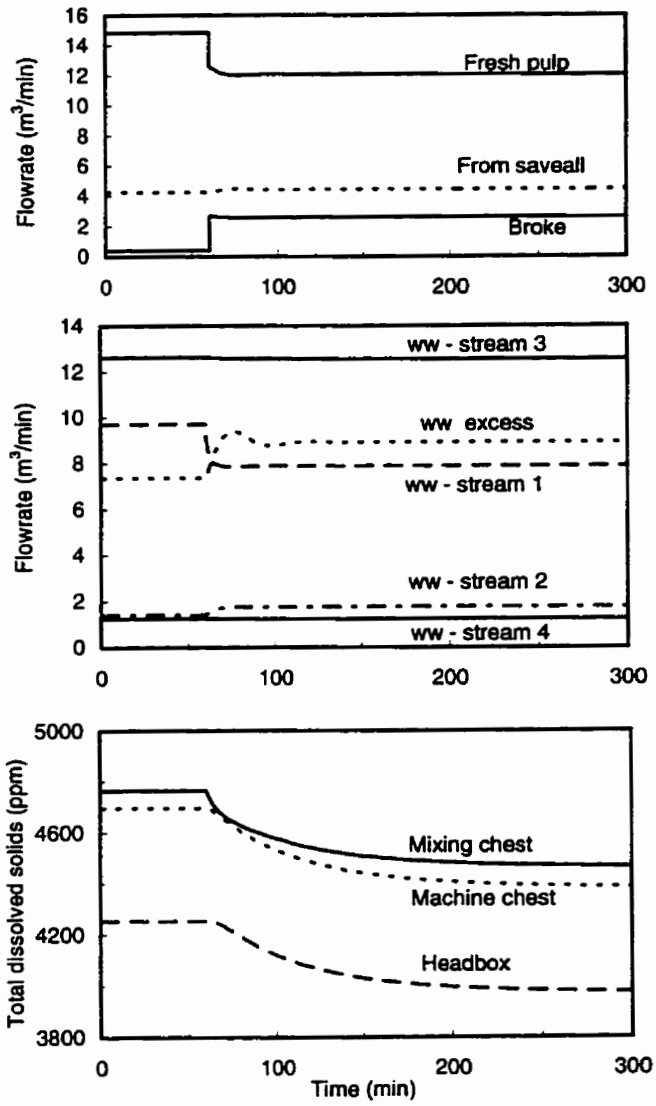

Figure 3.9: Effect of a change in broke recirculation rate, white water and pulp flow rates.

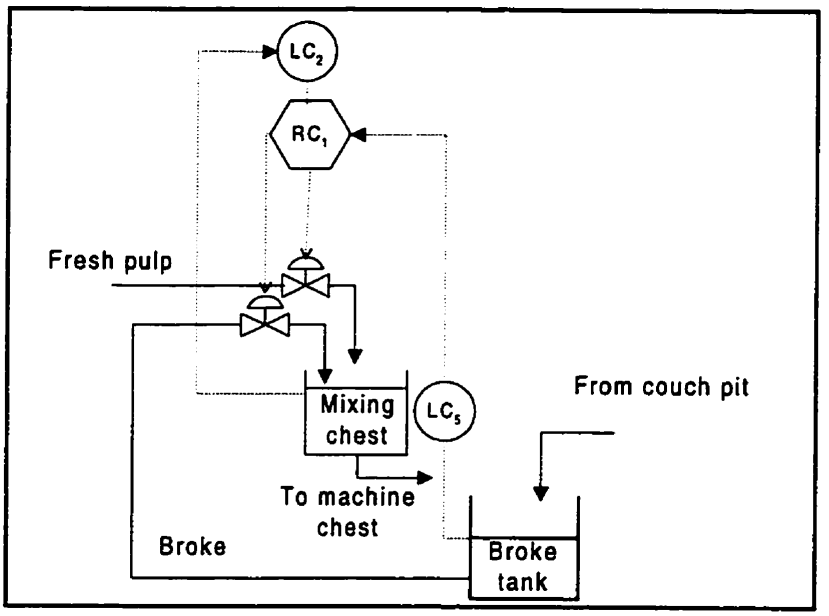

Figure 3.10: Feedback control of broke tank level.

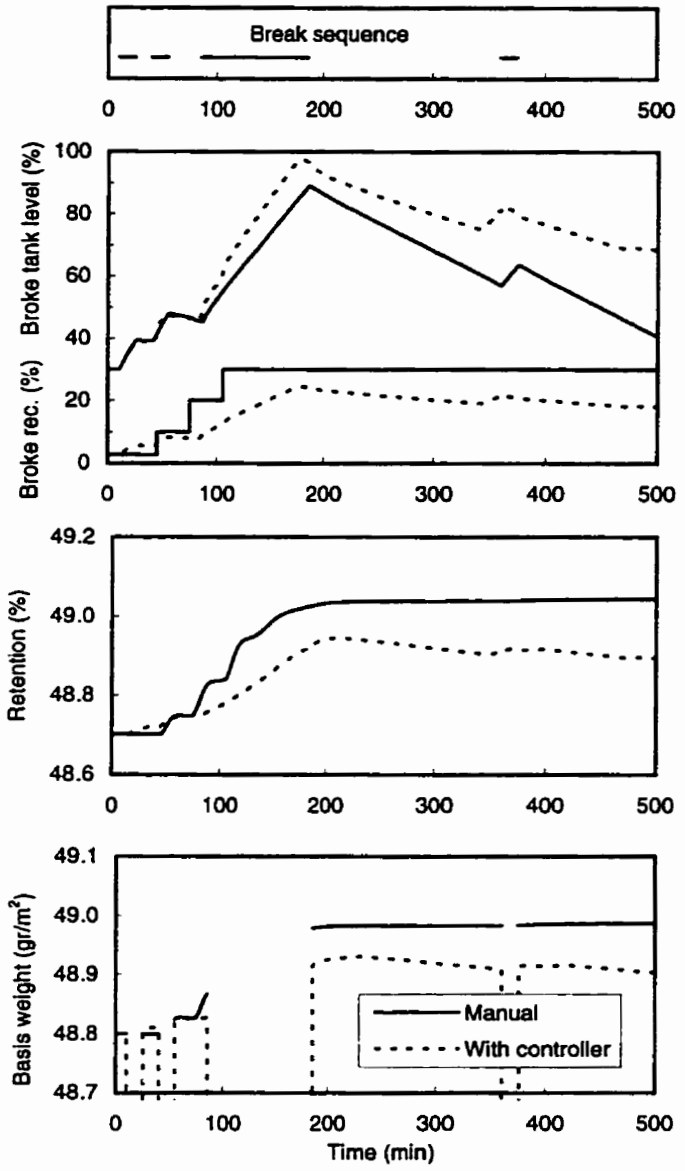

Figure 3.11: Manual and automatic control of the broke tank level for multi-break sequence.

CHAPITRE IV

PAPER MACHINE CONTROLLABILITY: EFFECT OF DISTURBANCES ON BASIS WEIGHT AND FIRST-PASS RETENTION.

José-Antonio Orccotoma, Jean Paris and Michel Perrier

Department of Chemical Engineering, École Polytechnique, C.P. 6079, succ. Centre-ville, Montréal, Qc, Canada H3H 3A7

(Submitted to The Canadian Journal of Chemical Engineering)

Keywords: Controllability analysis, paper machine, process dynamics

4.1 PRÉSENTATION*

Les chapitres 2 et 3 ont eu pour objet principal la caractérisation du comportement dynamique du procédé. Les variations dans les profils de distribution de matière des fibres, des fines et des solides dissous peuvent être utilisées pour interpréter les effets des perturbations les plus fréquentes. Dans les dernières figures du chapitre 3, on observe que la rétention première et le grammage (en boucle ouverte) sont affectés lors de changements dans le taux de recirculation de cassés et dans la teneur de fines dans la pâte.

Dans les machines à papier, deux propriétés sont considérées comme les plus importantes: la rétention et le grammage. La première détermine la quantité de fibres non retenues dans la toile qui seront recyclées vers la ligne de production, et la deuxième est une propriété du produit final. Si l'on impose des limites de tolérance à ces deux variables de sortie, on aimerait savoir d'abord: est-il possible d'atteindre ce niveau de performance malgré les perturbations? si ce n'est pas le cas, dans quelles situations ces limites ne seront pas respectées? est-ce un problème *exclusif* du système de contrôle? et quelles seraient les modifications à apporter au procédé pour le rendre plus performant?

---

*Cette section a pour but de faire le lien entre les articles de la thèse.

La simulation dynamique comme outil pour répondre aux questions précédentes a des limitations. Une étude systématique du procédé devient difficile et impraticable. Par contre, l'analyse de la commandabilité des procédés permet de répondre à ces questions; le développement d'un modèle linéaire devient nécessaire lors de l'analyse dans le domaine fréquentiel.

4.2 ABSTRACT

A controllability analysis of a paper machine and the pulp preparation area in a newsprint mill was performed to determine the maximum allowable variability of the pulp furnished to the process. The goal was to keep the output variables, basis weight and first-pass retention between certain limits in spite of disturbances and paper grade changes. The results indicate that the process is more disturbed at high frequencies, and that the two output variables may be maintained within the interval ±1% of their nominal values if the maximum variability in the consistency and fines content of the pulp to the paper machine is lower than ±1% and ±2% respectively.

4.3 INTRODUCTION

In an increasingly competitive market, the paper industry must upgrade its production practices in order to reduce process variability and to increase paper machine operation efficiency. The term system stability has been used to characterize the problem of maintaining continuous salable production of paper mills despite the frequent occurrence of disturbances. Luquet (1995) has used the expression stability of a paper machine and its white-water circuit to describe the capacity to quickly restore operations following interruptions such as papersheet rupture in the machine, grade change, startup and shutdowns.

A more explicit definition of stability of paper machine operation has been proposed by Gess and Kanitz (1996) by considering the relationship of the pulp flow rate as a manipulated variable to control the surface density of the paper sheet. In their definition, a paper machine is operating in stable manner if two conditions are satisfied: first, the main pulp flow rate through the mixing pump is kept as constant as possible; second, the three standard deviation variations in the pulp flow rate remain within a given range. Operation stability may be affected by any change in the stock quality and composition, the degree of closure of the white-water network and the process configuration.

In both these definitions, there is still a strong subjective component, and there is no index available whereby a value or an analytical procedure for determining the degree of the stability in the process can be assigned. The purpose of this paper is to quantify the effect of disturbances in a newsprint paper machine, and to determine the limits imposed by the process itself. A performance objective is to keep the output variables within pre-established limits in spite of changes in their references and the advent of disturbances.

The concept and the methodology for the input-output controllability analysis proposed by Skogestad and Postlethwaite (1996) was used for the treatment of the paper machine and white-water network stability problem considered above. Two

properties have been selected as main output variables: the surface density or basis weight of the paper in the machine direction, and the retention. A dynamic model of a twin-wire paper machine forming zone and the pulp preparation area was developed, making it possible to estimate the effect of variations of the feed pulp properties on the paper machine output variables.

A summary of the procedure proposed by Skogestad for controllability analysis with emphasis in the interaction effects and the performance limitations imposed by disturbances and input constraints is first presented. Then, the process flow diagram, the model development, and the procedure for obtaining the transfer functions are described. Finally, the frequency analysis of the linearized model and the determination of controllability conditions for the process are presented.

4.4 CONTROLLABILITY ANALYSIS

The definition of controllability formulated by Skogestad (1994) is used throughout this work: Input-output controllability is the ability to achieve acceptable control performance; that is, to keep the outputs (y) within specified bounds or displacements from their references (r) in spite of unknown but bounded variations such as disturbances (d) and plant changes, using available inputs (u) and available measurements (y_m or d_m).

Input-output controllability is a property of the process and is independent of the control system. This concept can be applied to find out what control performance can be expected in a process; controllability can only be altered by changing the plant itself. The term controllability is frequently associated with the concept of state controllability, which is the ability to bring a system from a given initial state to any final state within a finite time. A state-controllable system is not necessarily input-output controllable in Skogestad's sense, and vice versa.

Input-output controllability analysis is more easily implemented if a systematic procedure is followed to determine the expected control performance. The procedure can also be used to select a control structure, i.e., to select the inputs, outputs and the control configuration. The main stages of the controllability analysis are:

- scaling of the linear model;
- estimation of poles and zeros;
- computation of the relative gain array and condition number; and
- determination of the performance requirements imposed by disturbances and the limitations imposed by input constraints.

4.4.1 Scaling

Scaling ensures that all variables have comparable magnitude. Bounds concerning the required process performance, the expected magnitudes of disturbances, and the availability of the manipulated variables to counteract the disturbances must be determined at this stage. The unscaled linear model of the process expressed in deviation variables is:

$$\hat{y} = \hat{G}\,\hat{u} + \hat{G}_d\,\hat{d} \tag{4.1}$$

where the ^ symbol denotes that the variables are in their unscaled units; $\hat{G}$ and $\hat{G}_d$ are the process and the disturbance transfer functions. For single input–single output (SISO) systems, the input variable, $\hat{u}$, and the disturbance, $\hat{d}$, are scaled as follows:

$$u = \frac{\hat{u}}{\Delta\hat{u}_{max}}\ ; \quad d = \frac{\hat{d}}{\Delta\hat{d}_{max}} \tag{4.2a}$$

Considering that the variables such as reference, $\hat{r}$, output variable, $\hat{y}$, and the error, $\hat{e} = \hat{y} - \hat{r}$, have the same units, they may be scaled as follows:

$$y = \frac{\hat{y}}{\Delta\hat{e}_{max}}\ ; \quad r = \frac{\hat{r}}{\Delta\hat{e}_{max}}\ ; \quad e = \frac{\hat{e}}{\Delta\hat{e}_{max}} \tag{4.2b}$$

A block diagram of the feedback control system is indicated in Figure 4.1. In multiple input–multiple output (MIMO) systems, each disturbance, input variable

and error may have different limits. Scaling is then performed by means of a diagonal matrix that contains each scaling value.

4.4.2 Bandwidth

Bandwidth can be understood as the frequency limit for which feedback control is still effective. Low-frequency disturbances are attenuated by feedback control, while high-frequency disturbances are attenuated by the process itself. The effect of disturbances is usually larger around the bandwidth frequency. The gain crossover frequency, ω_c, defined as the frequency at which the open-loop transfer function, L, first crosses the value 1 from above, is sometimes used to define the bandwidth (notation is referred to Figure 4.1):

$$|L(j\omega_c)| = |G_c(j\omega_c)\ G(j\omega_c)| = 1 \qquad (4.3)$$

Another definition used is the closed-loop bandwidth, ω_B, which is the frequency at which the sensitivity function, S, first crosses the value $1/\sqrt{2} = 0.707$ from below:

$$|S(j\omega_B)| = |(1 + L(j\omega_B))^{-1}| = 0.707 \qquad (4.4)$$

For systems with phase margin lower than 90°, it can be demonstrated that $\omega_c > \omega_B$ (Skogestad and Postlethwaite, 1996). In this work, the gain crossover frequency, ω_c, is used as the bandwidth definition during the controllability analysis.

4.4.3 Poles and zeros

Poles in MIMO systems are the eigenvalues of the state matrix in a state-space representation. An alternate definition is: If $s = p$ is a pole of $G(s)$, then there exist an output direction y_p and an input direction u_p, for which $G(p)$ has an infinite value. In SISO systems, poles are the values of s for which $G(p)$ is infinite. Right-hand-plane (RPH) poles are the origin of instabilities, and they impose a lower limit on the bandwidth ω_c. Havre and Skogestad (1996) have conducted a detailed study of the effects of RHP zeros and RHP poles in MIMO systems.

Zeros in MIMO systems arise when competing internal effects are such that the output is zero even when the inputs are different from zero. The normal rank of $G(s)$ is defined as the rank of $G(s)$ at all values of s except for a finite number of singularities, which are the zeros. For SISO systems, zeros are the values of s for which $G(s) = 0$. From classical root-locus analysis, as feedback gain increases, the closed loop poles migrate to the positions of the open-loop zeros, which are unchanged by feedback. Therefore, RHP zeros imply high gain instability, and limits the achievable bandwidth.

4.4.4 Relative gain array

The relative gain array, RGA, proposed by Bristol (1966), is a scale-independent measure of interactions for multivariable processes; it was initially based on steady-

state information only. Each RGA element is defined as the open-loop gain divided by the gain between the same two (input-output) variables when all other loops are under perfect control:

$$\lambda_{ij} = \frac{(\partial y_i / \partial u_j)_{u_k = 0,\ k \neq j}}{(\partial y_i / \partial u_j)_{y_k = 0,\ k \neq i}} \qquad (4.5a)$$

The RGA elements, λ_{ij}, can be obtained from the transfer matrix, G_{nxn}, by the equation

$$\Lambda(G) = G \times (G^{-1})^T \qquad (4.5b)$$

where $\Lambda(G)$ is a n by n matrix representing the relative gain array of the plant G, the symbol $\times$ denotes element-by-element multiplication, and the superscript T is the transpose. McAvoy (1983) has defined the dynamic RGA and extended this concept to the frequenty domain. One of the main uses of the RGA is to integrate process design and control issues. When an analytical dynamic model can be formulated, the control loop interactions can be identified at the conceptual design stage of a process to reveal potential problems and to help select the best pairing between input and output variables. The preferred input-output variable pairs are those that correspond to RGA elements closest to 1. Large RGA elements signify that a process design will be difficult to control because of sensitivity to input uncertainties (Skogestad and Morari, 1987).

4.4.5 Condition number

In multivariable processes, the magnitude of the output variables, y, depends on the direction of the inputs, u. The singular values of the plant, $\sigma(G)$, represent the gain of the plant in the direction, u. The condition number, γ, of a matrix is strongly dependent on the scaling and is defined as the ratio between the maximum, $\bar{\sigma}(G)$, and the minimum, $\underline{\sigma}(G)$, singular values:

$$\gamma(G) = \frac{\bar{\sigma}(G)}{\underline{\sigma}(G)} \tag{4.6}$$

The condition number is used as an input-output controllability indicator: it has been postulated that plants with a large condition number have strong directionality and are "ill-conditioned." This is not absolutely true because a large value of γ may be caused by a large $\bar{\sigma}(G)$ instead of a small $\underline{\sigma}(G)$. When $\underline{\sigma}(G(j\omega)) < 1$, for a given frequency ω, it is not possible to provoke output changes of unit magnitude from input changes of unit magnitude; the minimum singular value, $\underline{\sigma}(G)$, has been proposed as a resiliency index (Morari, 1983).

4.4.6 Time delay constraints

Time delays, θ, in SISO systems impose an upper limit on the achievable bandwidth, $\omega_c < 1/\theta$, approximately. In MIMO systems, time delays also impose limitations; if

θ_{ij} is the time delay in the ijth element of $G(s)$, then a lower limit on the time delay for output i is given by the smallest delay in row i of $G(s)$.

4.4.7 Performance requirements imposed by disturbances

In this section, for disturbance rejection, it is assumed that the reference is constant, $r = 0$, and that the disturbance has been scaled such that at each frequency the worst-case disturbance is $|d(\omega)| = 1$; it is also assumed that the outputs have been scaled such that the performance objective is $|e(\omega)| < 1$ at all frequencies.

For SISO systems, narrow limits on the sensitivity function, $S = (1 + L)^{-1}$, and the loop gain may be derived. Without control, the sinusoidal response is $e(\omega) = G_d(j\omega)d(\omega)$. It is clear that the performance objective is satisfied if $|G_d(j\omega)| < 1$, and the plant is then said to be self-regulated. If $|G_d(j\omega)| > 1$ at a certain frequency, then some control is required. By considering feedback control, we have:

$$e(s) = S(s)G_d(s)d(s) \tag{4.7}$$

The requirement that $|e(\omega)| < 1$ is satisfied for any $|d(\omega)| \leq 1$ at any frequency if:

$$|SG_d(j\omega)| < 1 \quad \forall\omega \quad \rightarrow \quad |S(j\omega)| < 1/|G_d(j\omega)| \quad \forall\omega \tag{4.8}$$

From Equation (4.8), the frequency ω_d at which $|G_d|$ crosses 1 from above yields a

lower limit on the bandwidth, ω_c. This constraint may be approximately represented by: $\omega_c > \omega_d$.

In MIMO systems a similar derivation is complicated by the directionality. To circumvent that difficulty, the concepts of disturbance direction, y_d, and the associated disturbance condition number, $\gamma_d(G)$, have been defined by Skogestad and Morari (1987):

$$y_d = \frac{1}{\|g_d\|_2} g_d \tag{4.9}$$

$$\gamma_d(G) = \bar{\sigma}(G)\bar{\sigma}(G^{-1}y_d) \tag{4.10}$$

The vector, g_d, represents the effect of a single disturbance, d, on the outputs $y = g_d d$. The symbol $\|\,.\,\|_2$ denotes the Euclidean norm of a vector. The disturbance condition number provides a measure of how the disturbance is aligned with the plant. It may vary between a lower limit of 1, if the disturbance is aligned in the "good" direction, and the condition number $\gamma(G)$, if it is in the "bad" direction. The corresponding limit in Equation (4.8) for the MIMO case then becomes:

$$\|Sy_d\|_2 < 1 \,/\, \|g_d\|_2 \quad \forall\omega \tag{4.11}$$

Equation (4.11) implies that S must be less than $1 \,/\, \|g_d\|_2$ only in the direction of y_d.

4.4.8 Limitations imposed by input constraints

Constraints on the manipulated variables may reduce the ability of the process to reject disturbances and track references. In all systems, there are physical limitations to the magnitude of changes that can be applied to the manipulated variables. At any time, for $|u(t)| \leq 1$, the error should be kept within $|e(t)| \leq 1$. Two cases may be considered for analysis: perfect control ($e = 0$), and acceptable control ($|e| \leq 1$).

In SISO systems, the input required to achieve perfect control is:

$$u = G^{-1}(s)\,r - G^{-1}(s)G_d(s)\,d \qquad (4.12)$$

For disturbance rejection, with $r = 0$ and $|d(\omega)| = 1$, the requirement $|u(\omega)| < 1$ is satisfied if:

$$|G^{-1}(j\omega)G_d(j\omega)| < 1 \qquad \forall\omega \qquad (4.13)$$

This condition implies $|G(j\omega)| > |G_d(j\omega)|$ at all frequencies; as discussed earlier, however, control is not needed for $|G_d(j\omega)| < 1$.

For command tracking in SISO systems, if one considers the worst-case scenario for changes in reference, which is $|r(\omega)| = R$ up to frequencies ω_r, and assuming $|d| = 0$, then the next condition can be derived:

$$|G^{-1}(j\omega)R| < 1 \qquad \forall\omega \le \omega_r \tag{4.14}$$

Perfect control being an ideal condition, the input magnitude required for acceptable control ($|e(\omega)| < 1$) is smaller than that for perfect control. For disturbance rejection, it is required that:

$$|G(j\omega)| > |G_d(j\omega)| - 1 \qquad \textit{for } \omega \textit{ such that } |G_d(j\omega)| > 1 \tag{4.15}$$

The condition for command tracking is: $|G(j\omega)| > |R| - 1$ for all $\omega \le \omega_r$.

Similar relationships have been developed for perfect control in MIMO systems. The input for perfect disturbance rejection is $u = -G^{-1} G_d d$. First, considering a single disturbance (g_d is then a vector), for the worst-case disturbance $|d(\omega)| = 1$, the required condition to avoid input saturation is that all elements in the vector $G^{-1}g_d$ be less than 1, that is:

$$\|G^{-1} g_d\|_{max} \le 1, \quad \forall\omega \tag{4.16}$$

For simultaneous disturbances G_d is a matrix, and the corresponding requirement is:

$$\|G^{-1} G_d\|_{i\infty} \le 1, \quad \forall\omega \tag{4.17}$$

The symbol $\| . \|_{max}$ denotes the vector max-norm or the largest element magnitude, and $\| . \|_{i\infty}$ denotes the induced max-norm or maximum row sum.

For acceptable control in MIMO systems, the problem may be formulated as an optimization problem (see Wolff, 1994, and Skogestad, 1996). By considering one disturbance at a time, the worst-case disturbance is $|d| = 1$ and the problem is formulated as follows:

$$U_{min} = \min \|u\|_{max} \quad \textit{such that } \| G u + g_d d \|_{max} \leq 1 \ , \ |d| = 1 \qquad (4.18)$$

A condition to avoid input saturation is $U_{min} < 1$, for all frequencies. As there is no analytical expression available, approximate conditions in terms of the singular value decomposition of the plant have been proposed (Skogestad, 1996):

$$\sigma_i(G) \geq |u_i^H g_d| - 1, \ \textit{at } \omega \ \textit{where } |u_i^H g_d| > 1 \qquad (4.19)$$

The term u_i is the ith singular output vector of G; g_d is a vector since a single disturbance is considered at a time. Based on Equation (4.19), it is possible to determine which disturbances may cause problems and at which frequencies.

4.5 PROCESS DESCRIPTION

The process diagram analyzed in this work is described in Figure 4.2. It includes the pulp preparation area and the forming zone of the paper machine (wet-end). The feed pulp furnished to the process is composed of fresh mechanical pulp, de-inked fibers, broke and fines recovered in the saveall. The purpose of the two reservoirs in the pulp preparation area (mixing and machine chests) is to guarantee that a homogeneous pulp is sent to the paper machine. A primary control objective is the consistency of the homogenized pulp leaving the machine chest. The consistency is the fraction of total suspended solids in the pulp; this fraction is controlled by manipulating the flow rate of the white-water for dilution. In the suggested configuration, a control loop is required for the level control in the mixing chest, while in the machine chest no level control is considered because this reservoir is kept in permanent overflow. Note that in the pulp preparation area, the only controlled property is the consistency. Pulp components such as fines and dissolved solids are not controlled in commercial newsprint mills.

The outlet stream from the machine chest is the so-called thick stock; this stream is manipulated to control the surface density of the paper, or basis weight, which is measured at the end of the paper machine. When there are disturbances in the fines content of the fresh pulp, the thick stock fines content can be altered, and this may cause disturbances downstream in the process. Before being delivered to the paper

machine, the thick stock is mixed with white-water from the silo in the mixing pump; it is then cleaned, screened and sent to the paper machine. To reduce the complexity of an actual process, all pieces of equipment between the mixing pump and the headbox (cleaners and screens) have been excluded from the flowsheet shown in Figure 4.2. The forming section of the paper machine may be divided into two zones. The white-water from the first zone is collected in the silo, suctioned by the mixing pump, and mixed with the thick stock. To avoid fluctuations in the suction of the mixing pump, the silo is always at full capacity and is in continuous overflow. The resulting pulp stream from the mixing pump is directed to the headbox; this circuit is called the short-recirculation loop. The white-water from the second zone is collected in the white-water chest and then redistributed and used throughout the mill for pulp dilution. The excess of white-water goes to the saveall, where most of the small particles not retained in the paper machine (fines) are recovered and recycled back to the mixing chest by filtration. The mass balance for this process is presented in Table 4.1.

First-pass retention is the fraction of the total fibrous material delivered to the paper machine that is retained on the wire during paper sheet forming. In most newsprint mills, retention is manually controlled by dosage of a polymer. When considering the overall process, the thick-stock flow acts as a disturbance in the pulp preparation area, while downstream it is the manipulated variable for basis weight control in the

paper machine. Physical properties of the thick-stock flow should be kept as constant as possible to reduce variability of the output variables in the paper machine. Main disturbances in the consistency, the fines content and the dissolved solids cause variations in first-pass retention and basis weight. The characterization of the dynamics in a white-water network during disturbances is provided in previous studies by Orccotoma et al. (1997a, 1997b).

4.6 MODEL DEVELOPMENT

4.6.1 Pulp components

It is assumed that the pulp is made of a solid phase in suspension within an aqueous phase. The solid phase includes the fibrous material, which is basically composed of fines and long fibres. Fines are defined as that part of the fibrous material passing through a 200 mesh in a Bauer McNett classificator. The aqueous phase is composed of water and some amount of dissolved material called dissolved solids. The dissolved solids include small colloidal particles and fully dissolved material (organic and inorganic compounds).

4.6.2 Main assumptions

To develop dynamic models for the paper machine and the pulp preparation area, the following hypothesis have been formulated:

- First-pass retention is mainly affected by the fines content in the headbox; an increase in the fines content of the pulp causes a reduction in retention.
- Dissolved solids content is referred to the aqueous phase; it is assumed that there is no mass exchange of any dissolved solid from the aqueous phase to the surface of fibres during sheet forming.
- Given that the fibrous material content in the web remains constant after the paper machine forming section, the study has been limited to that section of the paper machine. Basis weight can be approximated by estimating the fibrous material in the wet web going to the press section.
- A one-minute delay has been considered in the basis weight control loop. This value is exclusively a measurement delay. The valve for the thick-stock flow has a first-order transfer function with a time constant of 2 s (99% of the response in approx. 10 s).
- The flow rate of the white-water suctioned by the mixing pump from the silo (short recirculation loop) and mixed with the thick stock is assumed to be constant.
- All reservoirs are considered as continuous stirred tanks.

4.6.3 Scaling factors

Two sets of scaling factors have been defined in tables 4.2 and 4.3, for the paper machine and the pulp preparation area respectively. For easy understanding of the

limits imposed on the process variables, each scaling factor is expressed as a percentage of the steady-state value of its corresponding variable. In the paper machine, the maximum deviation allowed for both output variables, basis weight and retention, is ±1%. The selected scaling factor for the basis weight is a value that would be acceptable by most papermakers (Bialkowski, 1995). There is no available information on retention; for this reason the selected scaling factor should be considered as a reference value.

4.6.4 Paper machine model

The model representing the paper machine contains the basis weight, BW, and the first-pass retention, R, as output variables. There is one input variable, the thick-stock flow, F_8, and two disturbances, the consistency, and the fines content of the thick-stock stream, denoted by C_8 and Y_8 respectively. The scaled transfer function of the paper machine forming section is:

$$\begin{bmatrix} BW(s) \\ R(s) \end{bmatrix} = \begin{bmatrix} \dfrac{4.077(s+1.427)(s+0.474)}{D_1(s)} \\ \dfrac{1.276(s+1.436)(s+0.282)}{D_1(s)} \end{bmatrix} F_8(s) +$$

$$+ \begin{bmatrix} \dfrac{0.815(s+1.436)(s+0.531)}{D_1(s)} & \dfrac{-0.627(s+1.436)(s+0.216)}{D_1(s)} \\ \dfrac{0.255(s+1.436)(s-0.0065)}{D_1(s)} & \dfrac{-0.627(s+1.436)(s+0.801)}{D_1(s)} \end{bmatrix} \begin{bmatrix} C_8(s) \\ Y_8(s) \end{bmatrix} \qquad (4.20)$$

where $D_1(s) = (s+1.402)(s+0.442)$

The paper machine model was obtained by linearization of the equations representing the pieces of equipment in the short recirculation loop: paper machine forming section, silo and mixing pump. Their equations are described in tables 4.4 and 4.5. The reference used for linearization is the steady-state mass balance presented in Table 4.1. For the derivation of Equation (4.20), it was assumed that the basis weight can be approximated at the wet-end by using the relationship:

$$BW = \left(\frac{BW_{ss}}{F_{13\,ss}\, C_{13\,ss}} \right) F_{13}\, C_{13} \qquad (4.21)$$

where the subscript *ss* indicates the steady-state conditions from Table 4.1. F_{13} and C_{13} are the volumetric flow and the consistency of the wet web going to the press section in Figure 4.2. The steady-state basis weight (BW_{ss}) value is 48.8 g/m^2.

The first-pass retention was obtained from a model that considers the effect of the fines content in the pulp stream from the headbox (Orccotoma et al., 1997b).

$$R = (R_f - R_F)\, y_f + R_F \qquad (4.22)$$

In Equation (4.22), R is the retention and the subscripts f and F represent the fines and fibres respectively. As two zones have been considered in the forming section, this equation has been applied twice. The fines fraction, y_f, is considered at the entrance of each zone. The retention parameters for zones I and II are given in Table

4.6. These parameters represent the fraction of each pulp component that is retained on the web during paper forming.

The model described by Equation (4.20) has two output variables and only one manipulated input; clearly it is not possible to control both variables at the same time. The partial control structure was used because there is no other input available in the model representing the paper machine. When applying feedback, $F_8(s)=G_c(s)(BW_{SP}-BW)$, on the basis weight, a further relationship, which represents the effect of changes in basis weight set-point, BW_{SP}, and both disturbances, C_8 and Y_8, can be derived:

$$R(s) = \left[\frac{G_c G_v G_{p21}}{1+G_c G_v G_{11} G_m}\right] BW_{SP}(s) + \left[G_{d21} - \frac{G_{d11} G_m G_c G_v G_{p21}}{1+G_c G_v G_{11} G_m}\right] C_8(s) + \left[G_{d22} - \frac{G_{d12} G_m G_c G_v G_{p21}}{1+G_c G_v G_{11} G_m}\right] Y_8(s) \quad (4.23)$$

where G_c, G_m, G_v are the controller, the measure delay and the thick stock control valve, respectively. G_{ij} and G_{dij} are the ijth elements of the process and the disturbance transfer functions on Equation (4.20). It is not realistic to assume perfect control on the basis weight loop, because of the time delay. To follow the effect of disturbances on basis weight through dynamic simulation, a scaled PI controller with the parameters kc = 0.067 and T_I = 0.35 min was calculated. The open loop transfer function has a gain margin of 2.2 and a phase margin of 55°.

Because of a limitation in the retention model, which only takes the effect of fines into account, the proposed paper machine model does not include any term for the dissolved solids. The following scaled transfer function represents the effect of the thick-stock dissolved solids content, Z_8, on the dissolved solids content in the paper web leaving the forming section, Z_{13}:

$$Z_{13}(s) = \frac{0.196(s + 1.436)}{(s + 0.282)} Z_8(s) \qquad (4.24)$$

Equation (4.24) is obtained by linearization of the equations in tables 4.4 and 4.5. It can be used to establish limits on the variability of the dissolved solids in the thick stock.

4.6.5 Pulp preparation area

The model of the pulp preparation area includes the mixing and machine chests. It was obtained by linearizing the equations in Table 4.7 and using the steady-state data from Table 4.1. The resulting scaled transfer function is:

$$\begin{bmatrix} V_A \\ C_8 \\ Y_8 \\ Z_8 \end{bmatrix} = \begin{bmatrix} \frac{3.94x10^{-1}}{s} & \frac{3.21x10^{-2}}{s} \\ \frac{8.88x10^{-4}}{D_2(s)} & \frac{-1.13x10^{-1}(s+0.0931)}{D_2(s)} \\ \frac{-1.17x10^{-4}}{D_2(s)} & \frac{1.49x10^{-2}(s+0.0931)}{D_2(s)} \\ \frac{1.11x10^{-4}}{D_2(s)} & \frac{-1.40x10^{-2}(s+0.0931)}{D_2(s)} \end{bmatrix} \begin{bmatrix} F_3 \\ F_6 \end{bmatrix} + \begin{bmatrix} \frac{-8.53x10^{-2}}{s} & 0 & 0 & 0 \\ \frac{1.92x10^{-3}}{D_2(s)} & \frac{2.93x10^{-2}}{D_2(s)} & 0 & 0 \\ \frac{-2.53x10^{-4}}{D_2(s)} & \frac{-2.57x10^{-4}}{D_2(s)} & \frac{2.88x10^{-2}}{D_2(s)} & 0 \\ \frac{2.40x10^{-4}}{D_2(s)} & 0 & 0 & \frac{2.79x10^{-2}}{D_2(s)} \end{bmatrix} \begin{bmatrix} F_8 \\ C_3 \\ Y_3 \\ Z_3 \end{bmatrix}$$

$$\textit{where} \quad D_2(s) = (s+0.1048)\,(s+0.0564)$$

(4.25)

In Equation (4.25), V_A is the volume on the mixing chest; the variables denoted by C, Y and Z are the consistency, the fines content and the dissolved solids respectively. The subscripts 3, 6 and 8 are the pulp to the mixing chest, the white-water for dilution in the machine chest and the thick stock respectively.

4.7 RESULTS AND DISCUSSION

This section presents the controllability analysis of the paper machine and the pulp preparation area. The paper machine is considered first, because this piece of equipment imposes conditions to be satisfied in the pulp preparation area.

4.7.1 Paper machine

The model in Equation (4.20) represents a functional uncontrollable system: there are more output variables than inputs. Therefore, first-pass retention is considered

an uncontrolled variable and the basis weight loop is treated as a SISO system. To study the effect of disturbances on retention, the basis weight loop is closed. In the analysis that follows, the terms G_{ij} and G_{dij} refer to ijth elements in the process and the disturbance transfer functions in Equation (4.20).

4.7.1.1 Effect of disturbances on basis weight

This section determines under which conditions the effect of disturbances may cause a deviation of the basis weight that exceed the imposed limit, ±1%. From Figure 4.3, the magnitude of the transfer function $|G_{d11}|$ is equal to 1 for $\omega < 0.1$ rad/min; it then decreases to 0.8 at high frequencies. This indicates that the allowed variability, ±1%, for the consistency of the thick stock should be considered as a limiting value. For a higher variability, i.e., ±1.5%, the profile of $|G_{d11}|$ is shifted upward and $|G_{d11}(j\omega)| > 1$ for all frequencies; the performance requirement $|e| < 1$ would therefore not be respected. The obtained limiting condition for the variability of the thick-stock consistency, ±1%, is similar to that recommended from the experience point of view (Mardon et al., 1997; Lindstrom et al., 1994). In some commercial newsprint mills, the observed consistency variations in the thick stock have been reported at ± 2.2% (Bialkowski, 1995). When considering fines variability, $|G_{d12}(j\omega)| < 1$ for all frequencies, it is then concluded that this disturbance is not a problem for variations within ±2%. With higher fine variability, the basis weight is more affected at high frequencies.

To avoid input constraints arising from disturbances, for acceptable control ($|e| < 1$) it is required that $|G_{p11}(j\omega)| > |G_{d1j}(j\omega)| - 1$ at frequencies where $|G_{d1j}(j\omega)| > 1$, ($j = 1, 2$). If this condition is satisfied at all frequencies for both disturbances, then input saturation is not a problem. In this analysis, the plant transfer function includes the thick-stock control valve, $|G_{p11}(j\omega)| = |G_{11}(j\omega)\, G_V(j\omega)|$.

The above results were obtained from the linear model described in Equation (4.20). To verify their validity in the non-linear model, a dynamic simulation was performed by using the equations from tables 4.4 and 4.5. In Figure 4.4, the transient behaviour of the basis weight after two disturbances is considered. The disturbances were a 1% step variation in the thick-flow consistency at $t = 2$ min and a 2% step in the fines content at $t = 20$ min. As expected, the effect of the first disturbance is more significant than the second. For both disturbances, there is no problem associated with input saturation.

4.7.1.2 Effect of time delay on basis weight

It was assumed that $\theta = 1$ min in this process, and the achievable bandwidth is $\omega_c < 1$ rad/min. This limit may become a problem when the system is affected by disturbances in the thick-stock consistency of a magnitude greater than ±1%. Higher delay values reduce the achievable bandwidth and deteriorate basis weight control loop performance. In commercial paper machines, the observed delay of the basis

weight loop is variable; it depends on the distance from the basis weight valve to the paper machine, the speed of the machine and the characteristics of the basis weight measurement device.

4.7.1.3 Grade changes and command tracking

Because of the high speed of modern paper machines (> 1000 m/min), short periods of time and good command tracking are required during grade changes. The performance requirement for command tracking is satisfied if $|S(j\omega)| < 1/|R|$ for frequencies up to ω_r where command tracking is required; this condition approximately implies that $\omega_c > \omega_r$. It is then possible to approximate limits for the achievable bandwidth imposed by the time delay and the performance requirement for command tracking:

$$\omega_r < \omega_c < \frac{1}{\theta} \qquad (4.26)$$

Grade changes in a commercial paper machine are not of high frequency, the lower bound in Equation (4.26) may be considered close to zero ($\omega_r \approx 0$). Therefore, the process is controllable for set-point changes at low frequency.

To avoid input constraints arising from reference changes, the condition to be satisfied is $|G_{p11}(j\omega)| > R$ up to ω_r. By assuming $|R| = 2$ or 2% variation in set point, from Figure 4.3, the limiting condition is satisfied up to frequencies of $\omega \approx 100$

rad/min. It can thus be concluded that there is no input saturation for the specified set-point change. The transient behaviour of the non-linear model (Tables 4.4 and 4.5) in response to a set point change of magnitude $R = 2$ is indicated in Figure 4.5. The set-point change is applied by using a ramp signal during a period of 10 min. The results indicate good command tracking and no input saturation; the set-point target value is reached after approximately 15 min. The software used for the simulation of the non-linear model was SPEEDUP, a simulation package from Aspen Technology.

4.7.1.4 Effects of disturbances on first-pass retention

Although first-pass retention remains an uncontrolled output, it is possible to establish certain bounds within which it is desirable, if possible, to maintain this variable during transient conditions. These bounds were set at ±1% of the average. Variations in the consistency and the fines in the thick-stock flow have an effect on the fibrous composition of the pulp furnished to the paper machine; this in turn affects retention.

Equation (4.23) represents the transfer function when the basis weight control loop is closed. It is observed that any change in the basis weight set point, the consistency and the fines content of the thick-stock flow has an effect on retention. To keep retention within the pre-established limits, the magnitude of each term on the right

side of Equation (4.23) must be less than 1 for all frequencies. Figure 4.6 indicates the magnitude of each term from Equation (4.23) as a function of the frequency. Retention remains within limits for changes in basis weight ($|R| = 2$), and consistency. The magnitude of both disturbances is less than 1 for all frequencies. When considering fines variations in the thick-stock flow, the magnitude of this disturbance reaches 1 at low frequencies. Simulation results from figures 4.4 and 4.5 confirm these results. Thus, to avoid excursions of the retention outside the interval ±1% of the average, the maximum allowed variation in the fines content of the thick stock is approximately ±2%. Reports containing discrete measures, taken over long periods of time, seem to indicate higher variations in fines content in the pulp; unfortunately this property is not currently measured in most mills.

4.7.2 Pulp preparation area

In this section, the controllability analysis is used to determine limiting conditions for the variability of the pulp entering the mixing chest. The results from this area combined with those from the paper machine will enable establishment of limits for the overall process. The multivariable procedure focuses on the 2 x 2 system obtained from the first two rows in Equation (4.25). This subsystem has three poles: 0, -0.056, -0.105, and one zero at -0.094. Thus, there is no RHP zeros or RHP poles that may limit control performance. Pairing of the input and output variables is not complicated in this system; the 1,1-element of the steady-state RGA is $\lambda_{11}(0) = 0.99$.

If this result is unaffected for all frequencies, $|\lambda_{11}(j\omega)| \approx 1$, then interactions are not a problem; the plant is highly decoupled. The condition number is higher than 10 at low frequencies, but this does not indicate an ill-conditioned plant because the lower singular value is higher than 1 for frequencies up to 0.1 rad/min. At that frequency, the condition number is approximately equal to 3. These results should be expected; control of the volume and the pulp consistency in those reservoirs should not be a problem.

4.7.2.1 Effect of disturbances on the output variables

Only the first two disturbances from equation (4.25), F_8 and C_3, have an effect on the controlled variables (V_A and C_8). The steady-state matrix $G_d(0)$ for the 2 x 2 subsystem has elements larger than 1 for both disturbances; control is then required, at least at low frequencies. The disturbance condition number, γ_d, for both disturbances is indicated in Figure 4.7. For the first disturbance, F_8, the magnitude of γ_d is almost constant and close to 1. It is then concluded that this disturbance is well aligned with the plant. The profile for the second disturbance, C_3, is similar to the condition number for all frequencies; this disturbance is in the "bad" direction and it is the most difficult to reject at low frequencies. At high frequencies, this disturbance is attenuated by both chests acting as serial tanks.

4.7.2.2 Disturbances and input saturation

In Figure 4.8, the condition for perfect control, $\| G^{-1}g_d \|_{max} \leq 1$, is not satisfied by the second disturbance for frequencies up to 0.25 rad/min, while the first disturbance satisfies perfect control requirements at all frequencies. By considering a less restrictive condition, input saturation for acceptable control reveals, more specifically, that there is input saturation in the consistency control loop when the variation in consistency of the fresh pulp reaches its maximum value at low frequencies. It is not possible to satisfy $|e| < 1$ for frequencies $\omega < 0.1$ rad/min (Figure 4.9). This result indicates that the magnitude of the variation in the feedstock consistency is very high and that there is not enough white-water to dilute the pulp. One possible remedy is to increase the capacity of the white-water pipeline to the mixing chest from 125% to 175% of the nominal value. The variable consumption of white-water during fluctuations in the pulp consistency, may affect the availability of white-water for dilution in other places in the plant.

4.7.2.3 Uncontrolled outputs in the pulp preparation area

There are two uncontrolled output variables in the pulp preparation area: the fines content, Y_8, and the dissolved solids, Z_8, in the thick stock. These outputs are affected by variations in the inlet pulp stream to the mixing chest. It is not feasible to control those outputs with the mixing and machine chests configuration in Figure 4.2, but it is at least possible to determine the attenuation effect of these reservoirs

on both disturbances at high frequencies. By considering perfect control on the controlled outputs (V_A and C_8), and assuming that the system is only affected by disturbances in the fines content and dissolved solids of the inlet pulp (Y_3 and Z_3), the transfer functions for these disturbances are the elements G_{d33} and G_{d44} in the disturbance transfer function of Equation (4.25).

By plotting the magnitude of these disturbances versus frequency it is possible to determine the minimum frequency at which their magnitude is equal to 1. This condition is satisfied by both disturbances for $\omega > 0.14$ rad/min. When considering the dissolved solids transfer function in the paper machine, Equation (4.24), the minimum frequency obtained in the pulp preparation area remains almost unaffected. In this case, the bounds imposed in the fines content and dissolved solids in the thick stock are not respected if the maximum allowable disturbances in the inlet pulp to the mixing chest occur over periods exceeding 45 min.

4.8 CONCLUSIONS

The concept of input-output controllability satisfactorily explains the problems associated with the control of the main variables in a paper machine. Specifically, it is possible to determine the conditions under which the deviations in the output variables surpass the accepted specifications. This study has defined controllability conditions for a paper machine in terms of pre-established limits on the input and

output variables, as well as the effect of disturbances on a generic wet-end flowsheet.

Basis weight is one of the output variables in a paper machine; it is strongly affected by high frequency disturbances of the thick-stock consistency. To avoid variations that exceed ±1% of the average, the variability of the consistency in the thick-stock flow must be kept within the interval ±1% of the average. The mixing and machine chests satisfy this requirement for the thick-stock consistency for disturbances in the inlet pulp stream of approximately ±5%.

First-pass retention remains an uncontrolled variable and was assumed to be exclusively dependent on the fines content. It is possible to keep retention within the interval ±1% if the fines variability in the thick stock does not exceed ±2%. The fluctuations in the fines and the dissolved solids content of the furnish is attenuated at high frequencies in the pulp preparation area. For variations in those pulp components within periods no longer than 45 min (or frequencies $\omega > 0.14$ rad/min), the attenuation is effective enough to satisfy the pre-established requirements for the thick-stock flow.

4.9 ACKNOWLEDGEMENTS

The authors wish to thank Alain Roche of Paprican for his valuable comments. This work was supported by a Paprican scholarship through the Carl Winkler Memorial Foundation and the Natural Sciences and Engineering Research Council of Canada.

4.10 NOMENCLATURE

BW = basis weight

c_i = ith consistency

C_i = ith scaled consistency

d = scaled disturbance

e = scaled error

f_i = ith flowrate, m^3/min

F_i = ith scaled flow rate

G = scaled plant transfer function

G_c = scaled controller

G_d = scaled disturbance transfer function

G_V = thick stock valve

g_d = transfer function for a single disturbance

L = open loop transfer function

R = first-pass retention

S = sensitivity function

r = scaled reference

u = scaled manipulated variable

y = scaled output variable

y_i = ith fines content

y_f = fines content in eq.(4.22), fraction

Y_i = ith scaled fines content

V_A= mixing chest volume, m^3

V_B= machine chest volume, m^3

V_C= silo volume, m^3

z_i = dissolved solids, ppm

Greek characters

γ = condition number

γ_d = disturbance condition number

θ = time delay, min

λ_{ij}= ijth element of RGA

Λ = RGA matrix

σ = singular value

ω = frequency, rad/min

ω_c= gain crossover frequency, rad/min

ω_B= closed loop bandwidth, rad/min

ω_d= frequency at which $|G_d| = 1$.

Superscripts

I = paper machine forming zone 1.

II = paper machine forming zone 2.

Subscripts

f = fines

F = long fibres

ss = steady state

4.11 REFERENCES

Bialkowski, W. "Control Objectives for Uniformity in Pulp and Paper Manufacturing." Chapter 7 in Process Control Fundamentals for the Pulp & Paper Industry. Atlanta: Tappi Press, 1995.

Bristol, E. H. "On a New Measure of Interactions for Multivariables Process Control." IEEE Trans. Auto. Control AC-11, 133 (1966).

Gess, J. and R. Kanitz. "Monitoring the Stability of a Paper Machine." Tappi Journal 79(4):119-126 (1996).

Havre, K. and S. Skogestad. "Effect of RHP Zeros and Poles on Performance in Multivariable Systems." UKACC Conference Control '96, Exeter, UK, Sept. 1996, 930-935.

Lindstrom, R., W. H. Manfield, A. F. Tkacz and J. Mardon. "Coping with an Avalanche of Breaks." Appita 47(2):163-172 (1994).

Luquet, G. "Production Stability on Paper Machines and Pulp and White Water Circuits." Tappi Journal, 78(10):256-258 (1995).

Mardon, J., G. Chinn and G. O'Blenes. "Evaluating Paper Machine Operation - 1. Equipment and Operation." Paper presented at 83rd Annual Meeting, Technical Section CPPA, Montreal, Jan. 1997.

McAvoy, T. J. "Interactions Analysis Theory and Application." Insttum. Soc. of America, Research Triangle Park, NC (1983).

Morari, M. "Design of Resilient Processing Plants - III." Chemical Engineering Science, 38(11):1881-1891 (1983).

Orccotoma, J. A., J. Paris, M. Perrier and A. Roche. "Dynamics of White-Water Networks during Web Breaks." Paper accepted for publication in Tappi Journal (1997a).

Orccotoma, J. A., J. Paris and M. Perrier. "Dynamic Analysis of Fibrous Material and Dissolved Solids Distribution in the Wet-End of a Newsprint Mill." Paper submitted for publication in Appita Journal (1997b).

Skogestad, S. and M. Morari. "Implications of Large RGA Elements on Control Performance." Ind. Eng. Chem. Res., 26, 2323-2230 (1987).

Skogestad, S. "Design Modifications for Improved Controllability." Proc. AIChE Meeting, San Francisco, Nov. 13-18, 1994.

Skogestad, S. and I. Postlethwaite. "Multivariable Feedback Control: Analysis and Design." New York: John Wiley & Sons Ltd., 1996.

Speedup User Manual—Release 5.4. Cambridge: Aspen Technology Inc. (1993).

Wolff, E. A. "Studies of Control of Integrated Plants." Doctoral thesis, University of Trondheim, Norwegian Institute of Technology, July 1994.

TABLE 4.1: Mass balances for the process.

Stream	I.D.	Total fibers (t/d)	Cons. (%)	Flowrate (m^3/min)	Fines (%)	Diss. solids (ppm)
Inlet pulp	1	600.00	3.00	13.89	25.00	9000
Fibers from saveall	2	81.11	3.00	1.88	98.59	6699
Inlet to mixing chest	3	681.11	3.00	15.77	33.76	8726
Overflow from machine chest	4	63.57	2.80	1.58	34.37	8569
Mixing chest outlet	5	744.68	2.98	17.34	33.81	8712
White water for dilution	6	6.40	0.35	1.28	98.70	6699
Input to machine chest	7	751.08	2.80	18.63	34.37	8569
Thick-stock stock	8	687.51	2.80	17.05	34.37	8569
WW from silo to mixing pump	9	539.86	0.55	68.20	98.00	8569
Pulp to paper machine	10	1227.37	1.00	85.25	62.36	8569
Web to zone II	11	659.10	3.40	13.46	31.62	8569
WW from zone I to silo	12	568.27	0.55	71.79	98.00	8569
Web to presses	13	593.19	18.00	2.29	24.14	8569
WW from zone II	14	65.91	0.41	11.17	99.00	8569
Overflow from silo to ww chest	15	28.41	0.55	3.59	98.00	8569
Paper machine showers	16	0.00	0.00	4.17	0.00	100
WW to saveall	17	87.92	0.35	17.64	98.70	6699
Clear white water	18	6.81	0.03	15.77	100.00	6699

TABLE 4.2: Scaling factors for the paper machine.

	Variable	Description	Units	Scaling (%)
u_1	F_8	Thick-stock flow rate	m^3/min	±5
y_1	BW	Basis weight	gr/m^2	±1
y_2	R	First-pass retention	----	±1
d_1	C_8	Thick-stock consistency	----	±1
d_2	Y_8	Thick-stock fines content	----	±2
d_3	Z_8	Thick-stock dissolved solids content	ppm	±2

TABLE 4.3: Scaling factors for the mixing and machine chests.

	Variable	Description	Units	Scaling (%)
u_1	F_3	Pulp flow to mixing chest	m^3/min	±25
u_2	F_6	White water flow for dilution	m^3/min	±25
y_1	V_A	Mixing chest volume	m^3	±5
y_2	C_8	Thick-stock consistency	----	±1
y_3	Y_8	Thick-stock fines content	----	±2
y_4	Z_8	Thick-stock dissolved solids content	ppm	±2
d_1	F_8	Thick-stock flow rate	m^3/min	±5
d_2	C_3	Pulp consistency	----	±5
d_3	Y_3	Pulp fines content	----	±10
d_4	Z_3	Pulp dissolved solids content	ppm	±10

TABLE 4.4: Equations representing stream properties in zones I and II of the forming section of the paper machine.

Paper machine- zone I	*Paper machine - zone II*
$f_{11} = [R_H^{\,I}(1-c_{10}) + R^I c_{10}]f_{10}$	$f_{13} = [R_H^{\,II}(1-c_{11}) + R^{II} c_{11}]f_{11}$
$c_{11} = \dfrac{R^I c_{10}}{[R_H^{\,I}(1-c_{10}) + R^I c_{10}]}$	$c_{13} = \dfrac{R^{II} c_{11}}{[R_H^{\,II}(1-c_{11}) + R^{II} c_{11}]}$
$y_{11} = \dfrac{R_f^I y_{10}}{R^I}$	$y_{13} = \dfrac{R_f^{II} y_{11}}{R^{II}}$
$z_{11} = z_{10}$	$z_{13} = z_{11}$
$f_{12} = [1 - R_H^{\,I}(1-c_{10}) - R^I c_{10}]f_{10}$	$f_{14} = [1 - R_H^{\,II}(1-c_{11}) - R^{II} c_{11}]f_{11}$
$c_{12} = \dfrac{(1-R^I)c_{10}}{[1 - R_H^{\,I}(1-c_{10}) - R^I c_{10}]}$	$c_{14} = \dfrac{(1-R^{II})c_{11}}{[1 - R_H^{\,II}(1-c_{11}) - R^{II} c_{11}]}$
$y_{12} = \dfrac{(1-R_f^I)y_{10}}{1-R^I}$	$y_{14} = \dfrac{(1-R_f^{II})y_{11}}{1-R^{II}}$
$z_{12} = z_{10}$	$z_{14} = z_{11}$
where $R^I = (R_f^I - R_F^I)y_{10} + R_F^I$	*where* $R^{II} = (R_f^{II} - R_F^{II})y_{11} + R_F^{II}$

TABLE 4.5: Mass balances over mixing pump and silo (global, fibrous material, fines and dissolved solids)

Mixing pump

$$f_{10} = f_8 + f_9$$
$$f_{10}\, c_{10} = f_8\, c_8 + f_9\, c_9$$
$$f_{10}\, c_{10} y_{10} = f_8\, c_8 y_8 + f_9\, c_9 y_9$$
$$f_{10}(1 - c_{10})\, z_{10} = f_8(1 - c_8)\, z_8 + f_9(1 - c_9)\, z_9$$

Silo

$$0 = f_{12} - f_9 - f_{15}$$
$$V_C \frac{dc_9}{dt} = f_{12}(c_{12} - c_9)$$
$$V_C\, c_9 \frac{dy_9}{dt} = f_{12}\, c_{12}(y_{12} - y_9)$$
$$V_C(1 - c_9) \frac{dz_9}{dt} = f_{12}(1 - c_{12})(z_{12} - z_9)$$

TABLE 4.6: Additional data for flowsheet in Figure 4.1

Paper machine retention parameters		
Zone I		
Total fibrous material retention, %	R^{I}	53.70
Long fibers retention, %	R_F^{I}	97.54
Fines retention, %	R_f^{I}	27.23
Water retention, %	R_H^{I}	15.41
Zone II		
Total fibrous material retention, %	R^{II}	90.00
Long fibers retention, %	R_F^{II}	99.85
Fines retention, %	R_f^{II}	68.70
Water retention, %	R_H^{II}	14.43
Steady-state data		
First-pass retention, %	R	48.33
Basis weight, g/m^2	BW	48.80
Reservoirs capacity		
Mixing chest @ 75%, m^3	V_A	200
Machine chest, m^3	V_B	250
Silo, m^3	V_C	50

TABLE 4.7: Mass balances in mixing and machine chests (global, fibrous material, fines and dissolved solids).

Mixing chest

$$\frac{dV_A}{dt} = f_3 + f_4 - f_5$$

$$V_A \frac{dc_5}{dt} = f_3(c_3 - c_5) + f_4(c_8 - c_5)$$

$$V_A c_5 \frac{dy_5}{dt} = f_3 c_3 (y_3 - y_5) + f_4 c_8 (y_8 - y_5)$$

$$V_A \frac{dz_5}{dt} = f_3(z_3 - z_5) + f_4(z_8 - z_5)$$

Machine chest

$$0 = f_5 + f_6 - f_4 - f_8$$

$$V_B \frac{dc_8}{dt} = f_5 c_5 + f_6 c_6 - c_8 (f_4 + f_8)$$

$$V_B c_8 \frac{dy_8}{dt} = f_5 c_5 (y_5 - y_8) + f_6 c_6 (y_6 - y_8)$$

$$V_B \frac{dz_8}{dt} = f_5 z_5 + f_6 z_6 - z_8 (f_4 + f_8)$$

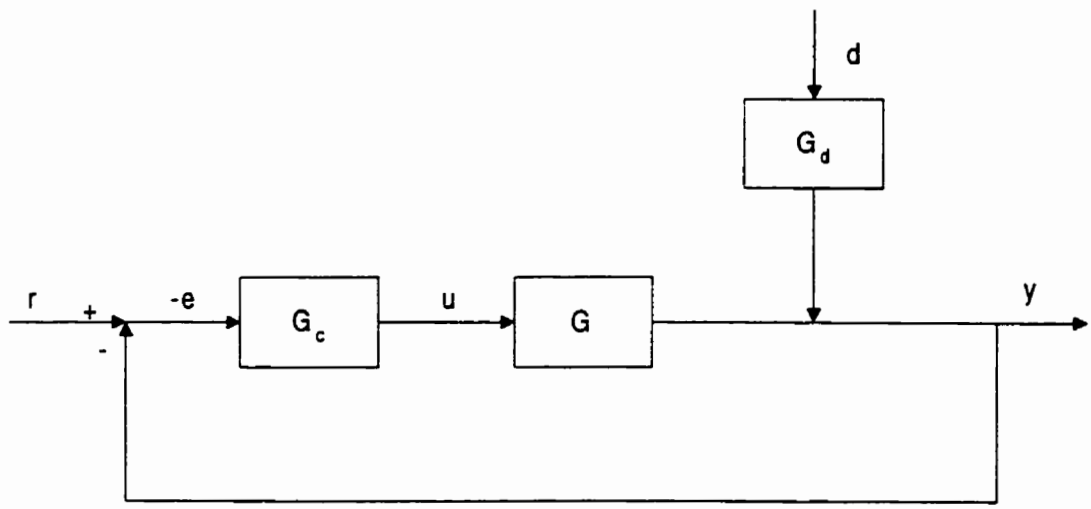

Figure 4.1: Feedback control system (scaled).

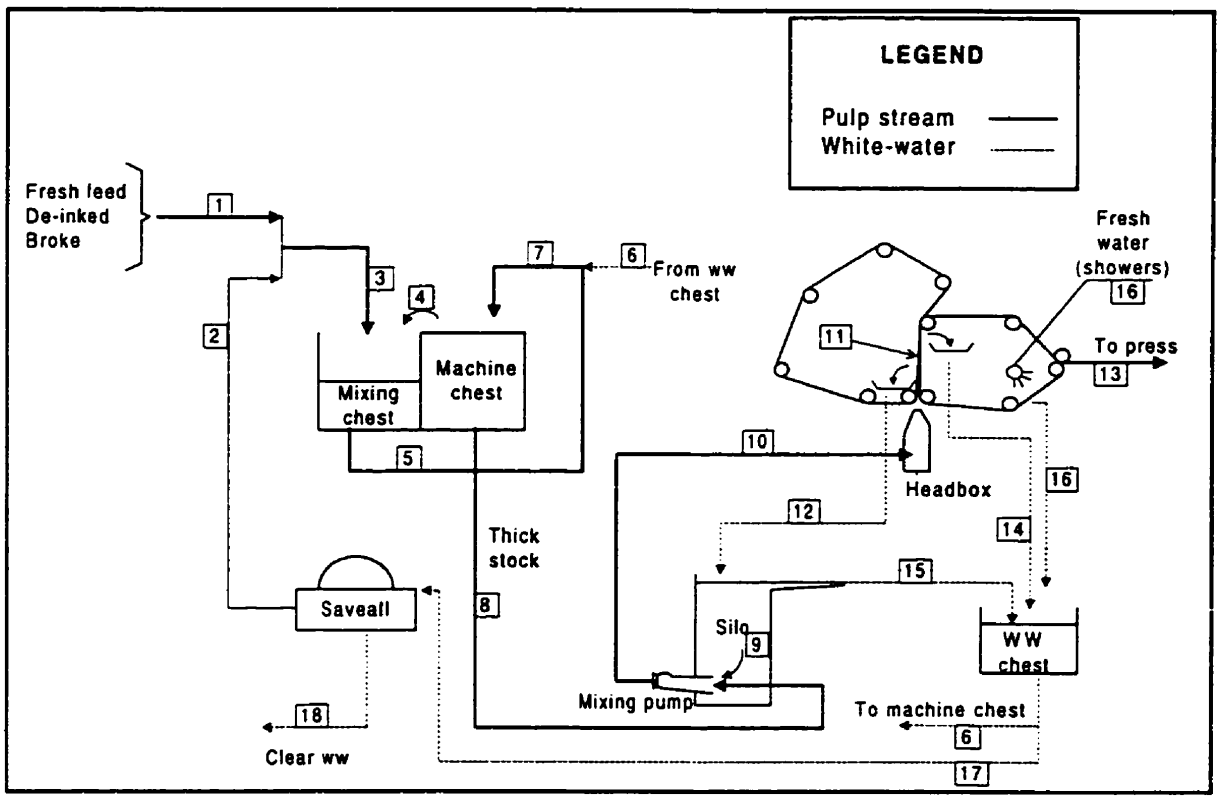

Figure 4.2: Wet-end flowsheet.

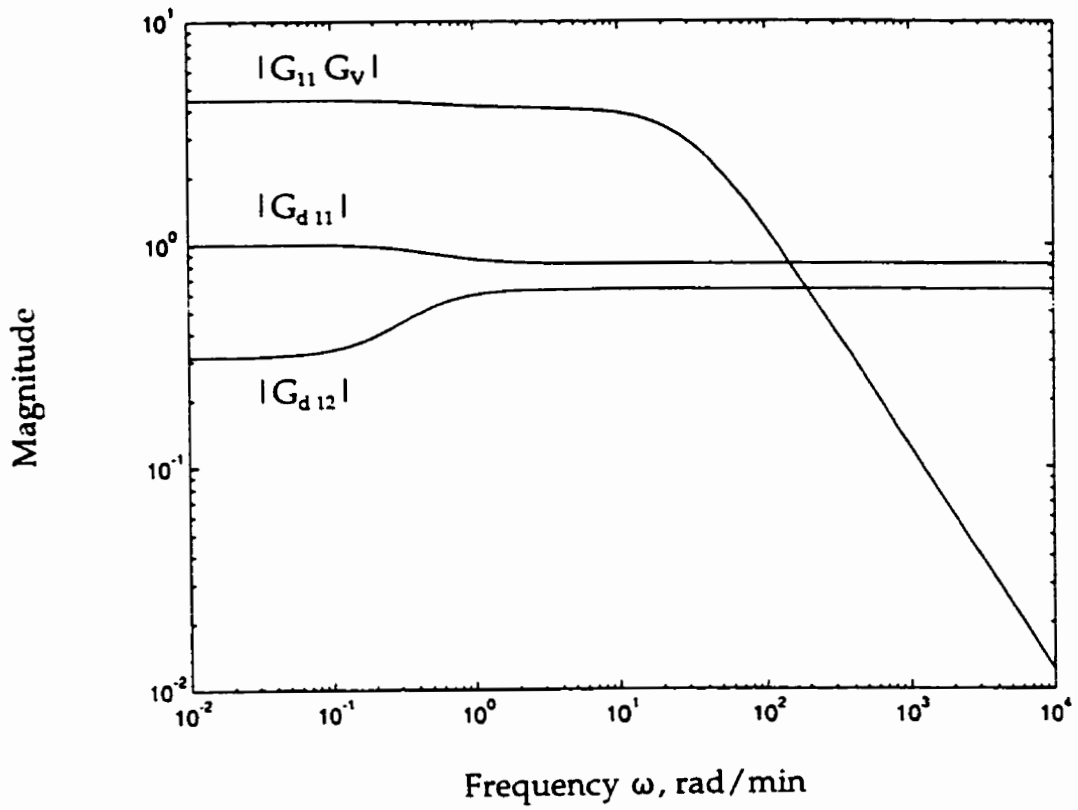

Figure 4.3: Plant and disturbances transfer function (basis weight loop).

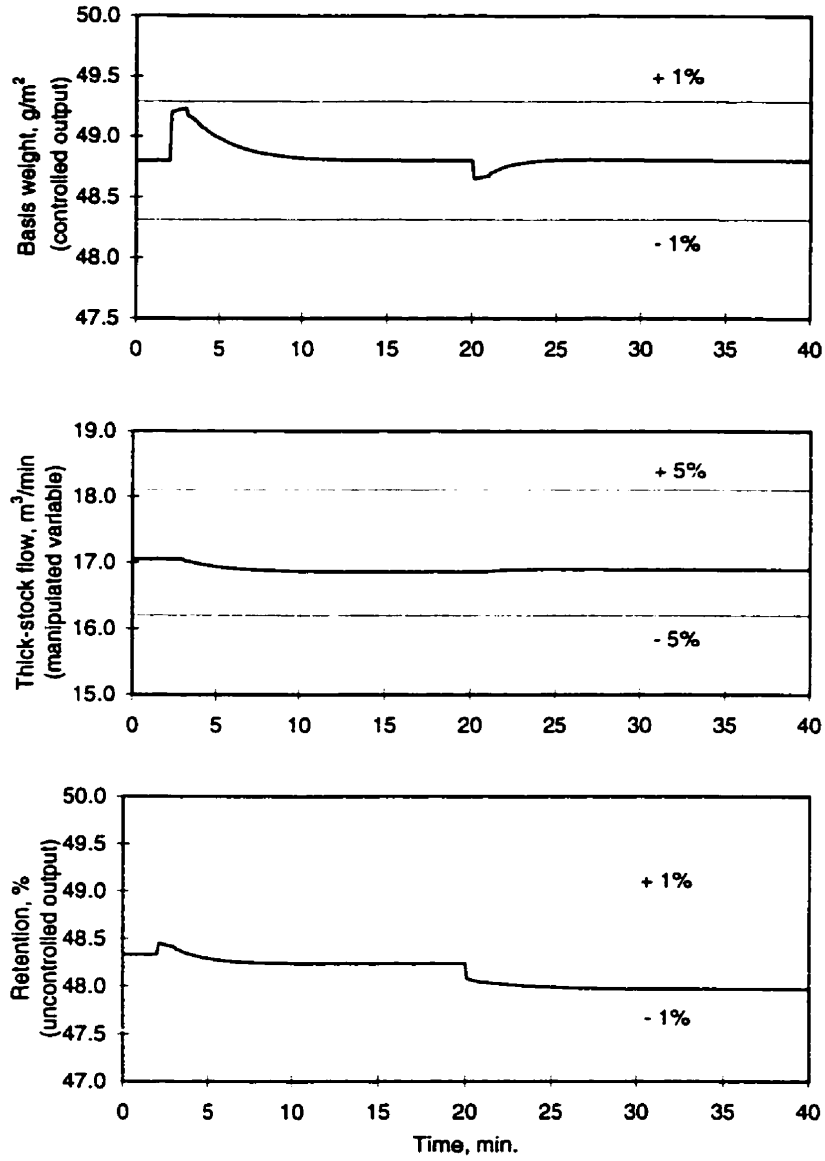

Figure 4.4: Effect of disturbances on the paper machine.
(t=2 min. 1% step in consistency; t=20 min. 2% step in fines)

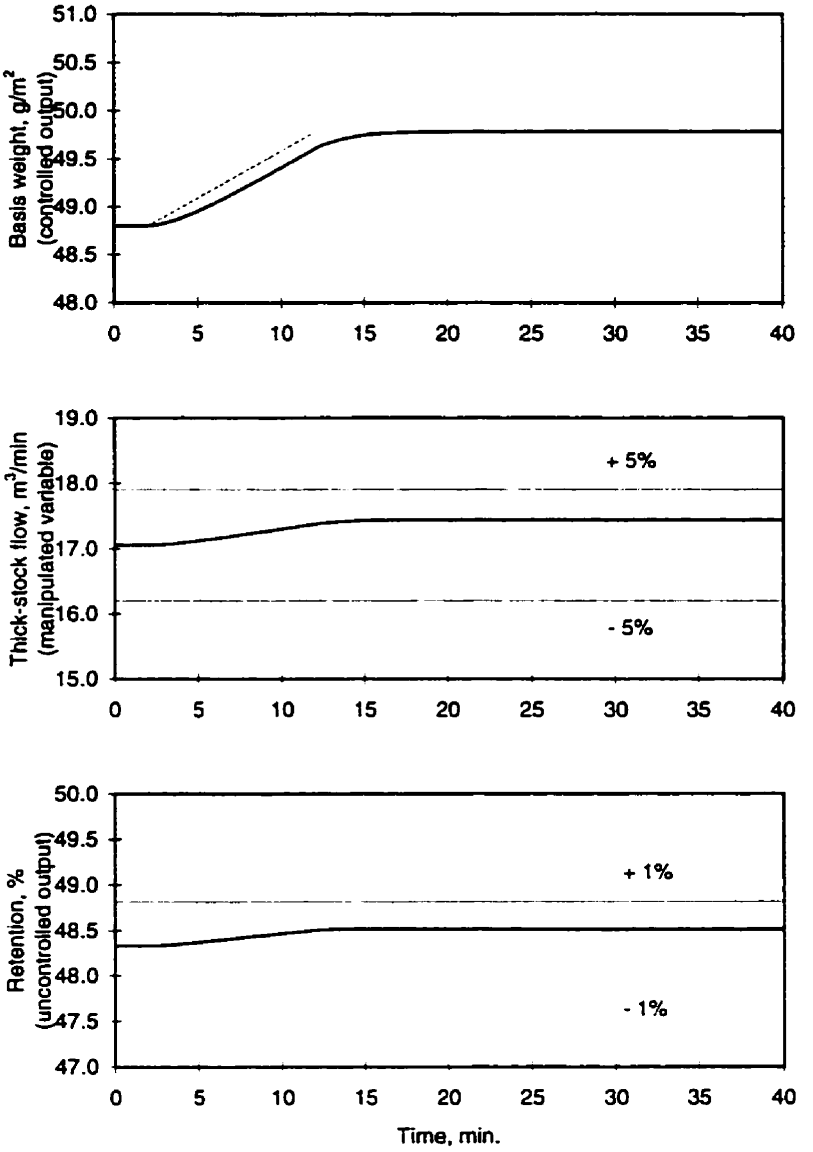

Figure 4.5: Basis weight set point change.
(a 2% ramp input from t=2 min. to t=12 min.)

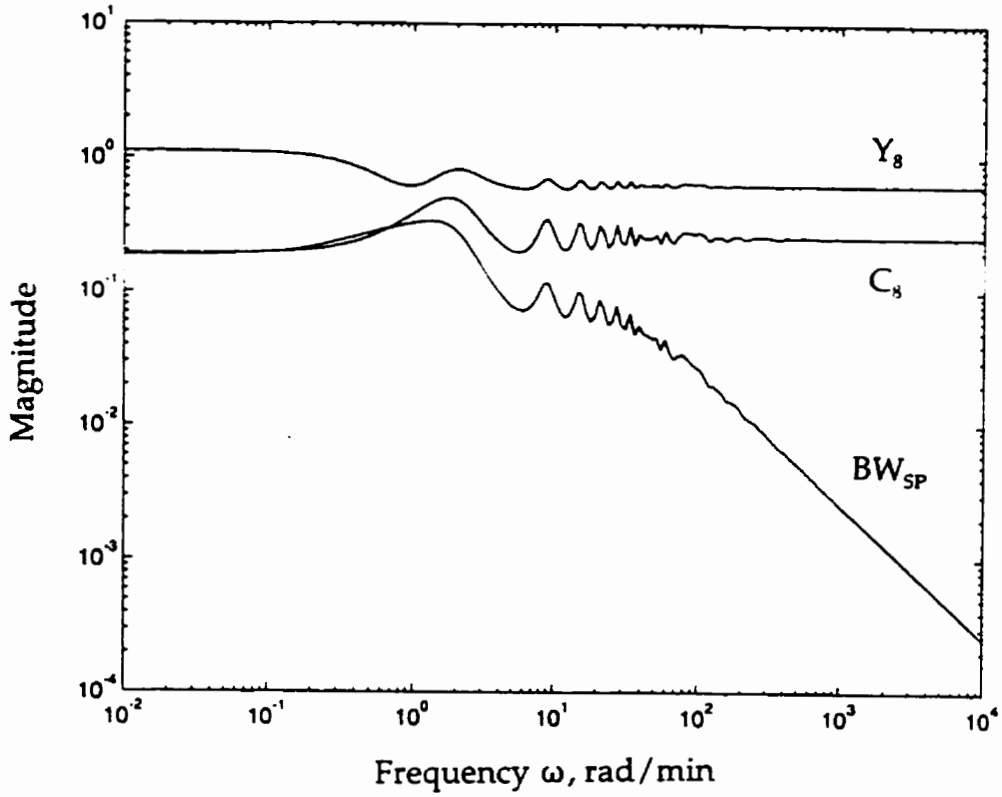

Figure 4.6: Effect of disturbances on retention.

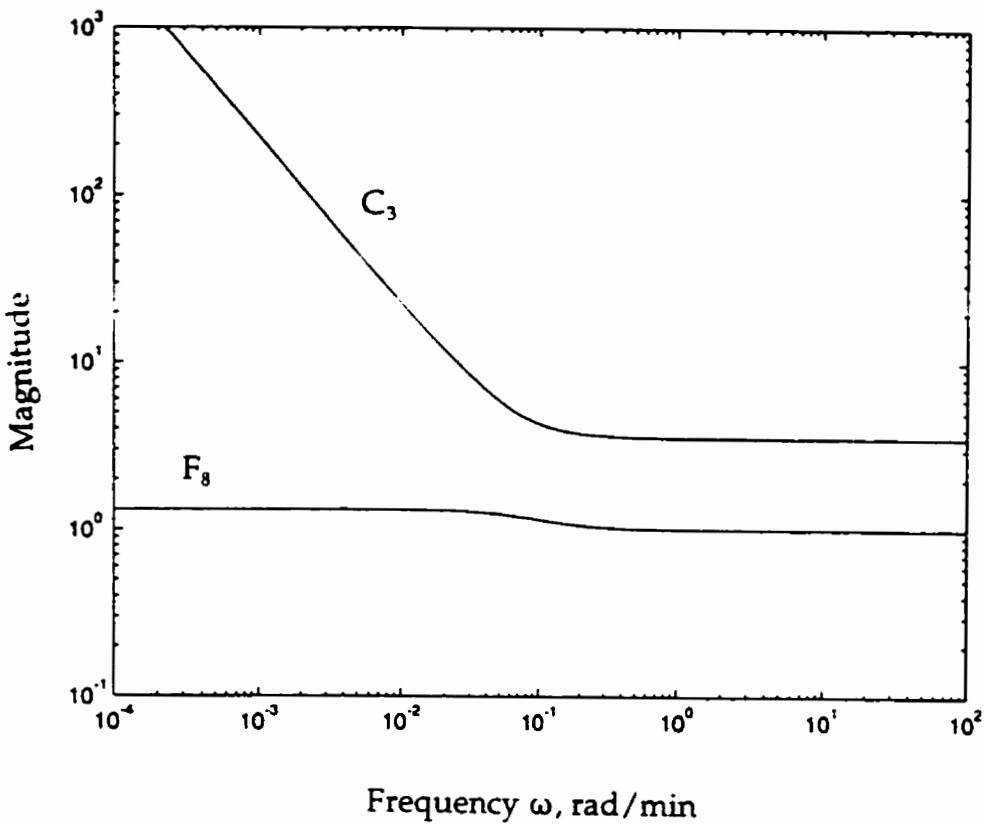

Figure 4.7: Disturbance condition number (mixing and machine chest).

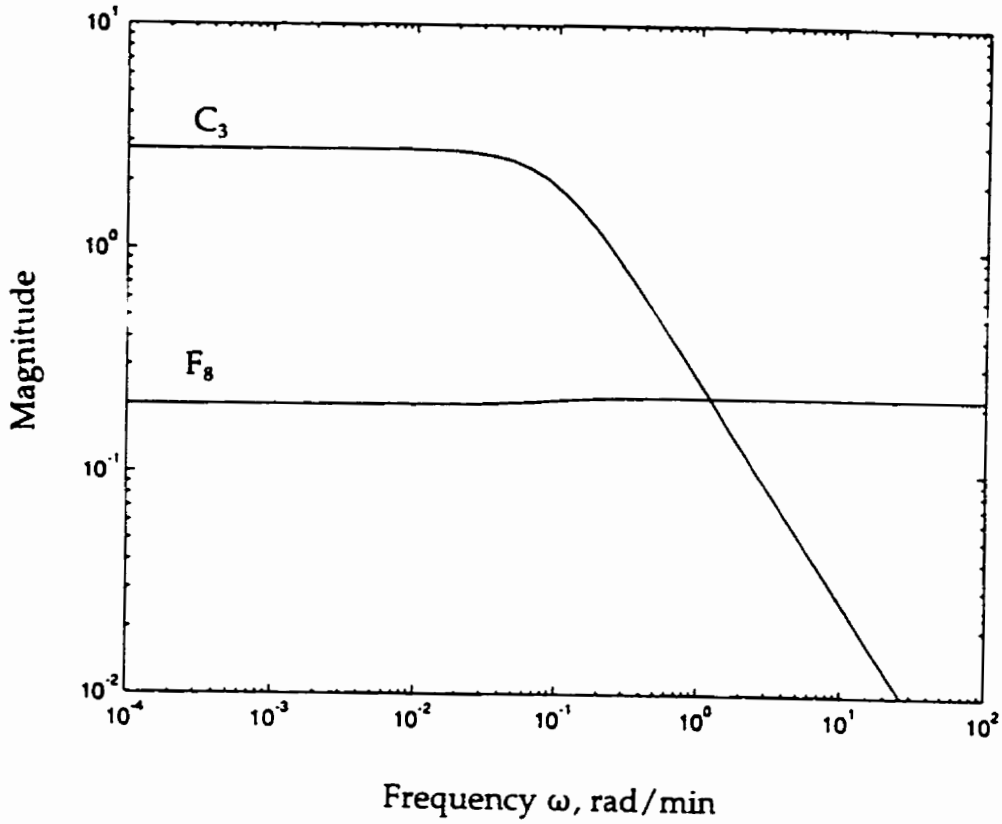

Figure 4.8: Inputs for perfect control (mixing and machine chests).

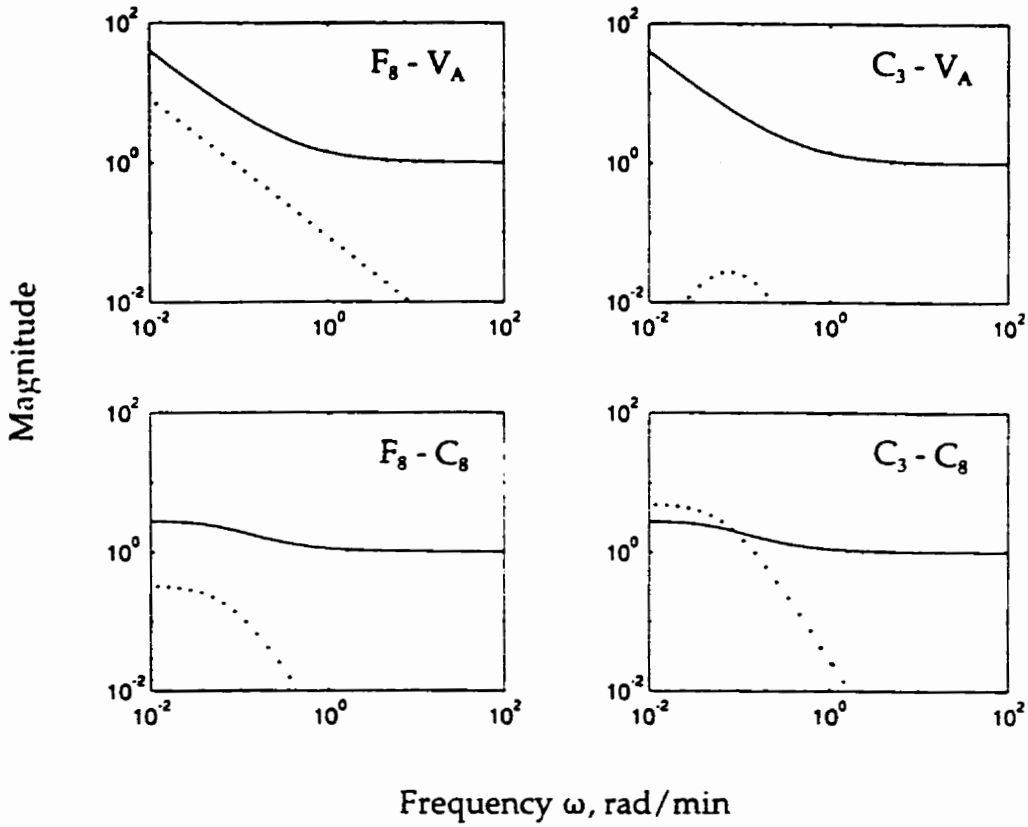

From equation (4.19)

—— $\sigma_1(G) + 1$

..... $|u_i^H g_d|$

Figure 4.9: Inputs for acceptable control (mixing and machine chests).

CHAPITRE V

REMARQUES FINALES

La pâte a été représentée par un système composé d'une phase solide (les fibres et les fines) en suspension dans une phase aqueuse (l'eau et les solides dissous). Cette représentation a été incorporée à un modèle mathématique d'une usine de papier journal qui comprend l'atelier de préparation de la pâte et la section de formation de la machine à papier. Le diagramme d'écoulement présenté dans cette étude (Figure 3.1) est un diagramme générique qui a été obtenu à partir de données sur des usines réelles. Certaines simplifications ont été apportées mais on a essayé de garder une représentativité pour que les résultats soient applicables dans l'ensemble des usines de papier journal.

Le modèle en régime stationnaire a permis d'établir les bilans de matière et d'énergie. Les profils de matière dans le circuit de pâte indiquent qu'il y a une accumulation de matière fibreuse résultant de la faible rétention des fines dans la machine. En conséquence, les fines se concentrent dans les eaux blanches qui sont ré-utilisées pour faire la dilution de la pâte. La distribution de matière des solides dissous présente un profil qui dépend de la concentration de solides dissous dans la pâte alimentée au procédé (à haute concentration) et le débit d'eau fraîche (à basse concentration) utilisé dans le circuit, principalement les douches de nettoyage des

toiles.

Le modèle dynamique a permis de caractériser la réponse transitoire lors des perturbations. D'abord on a étudié le comportement du procédé lors de la casse de la feuille ainsi que la problématique de la gestion des inventaires de cassés et d'eaux blanches. À ce stage, on a souligné l'importance du design du réseau et du système de contrôle pour atténuer l'effet de cette perturbation; les critères de design des réservoirs de cassés, d'eau claire et d'autres équipements ont été analysés dans le Chapitre II. Ensuite, on a évalué l'effet des perturbations sur les profils de distribution de matière fibreuse, et leurs conséquences sur les propriétés au niveau de la machine à papier (rétention et grammage). La prédiction de l'effet des fines sur la rétention a été faite en utilisant un modèle qui permet de reproduire des tendances observées. Le modèle de rétention décrit par l'équation (3.7) a été développé à partir des bilans de matière dans la section de formation de la machine.

L'étude de la commandabilité du procédé a été faite sur deux sections de l'atelier de papier illustrée à la Figure 3.1, soit, la section de préparation de la pâte incluant le cuvier de mélange et le cuvier de la machine, et la section de formation de la machine. L'étude de la dynamique du procédé a donné un bon aperçu du problème, ainsi le choix des variables à manipuler et des variables de sortie a tenu compte des connaissances acquises dans l'étape précédente. Le modèle de la machine à papier

représenté par l'équation (4.20) a été obtenu par linéarisation des équations représentant les équipements dans la boucle de recirculation courte. Le contrôle du grammage est fait en manipulant le débit de la pâte provenant du cuvier de la machine. La consistance et la teneur en fines dans ce courant sont les perturbations. Les résultats indiquent que le système est plus affecté à hautes fréquences, et que les perturbations ne doivent pas dépasser certaines limites si l'on veut que les variables de sortie restent toujours dans des limites imposées. Le tableau 5.1 indique les conditions limites imposées aux variables de sortie et les limites tolérables calculées afin de satisfaire ces conditions.

TABLEAU 5.1: Conditions limites dans la machine à papier.

Variable de sortie	**Variabilité max. (%)**	**Perturbation (pâte épaisse)**	**Variabilité max. (%)**
Grammage	±1	Consistance	±1
Rétention	±1	Fines	±2

Dans la section de préparation de la pâte, la consistance du courant de sortie peut être maintenue dans l'intervalle ±1%, pour des variabilités dans le courant de pâte alimentée au procédé d'environ ±5%. La variabilité des fines et des solides dissous est atténuée dans la section de préparation de la pâte pour des fréquences supérieures à 0.14 rad/min ou des périodes de fluctuation inférieures à 45 minutes.

Lorsque l'on considère que l'hypothèse de mélange parfait n'est pas toujours exacte pour les réservoirs de pâte, la fréquence observée dans la réalité sera plus élevée et par conséquent les périodes plus courtes.

Dans les procédés intégrés, les recirculations de courants affectent la distribution de matière et les temps de séjour; le procédé dans son ensemble peut devenir instable ou présenter de fortes oscillations. En plus, les interactions imposent des restrictions sur la performance du système de contrôle. Même si un modèle phénoménologique est disponible, l'analyse est très difficile. En considérant un modèle simplifié du procédé, l'approche développée dans cette section a permis d'établir et de vérifier des critères sur les limitations imposées au procédé sur une base rigoureuse.

CONCLUSION

1. Contributions au domaine

La *méthodologie* et les *résultats* de ce travail contribuent à une meilleure compréhension des phénomènes se produisant à l'intérieur des circuits d'eaux blanches; notamment on peut citer:

L'établissement d'une procédure à suivre lors du développement d'un modèle dynamique.

La mise au point du modèle dynamique a demandé l'établissement d'une procédure qui comprend la sélection de la partie de l'usine qu'on va utiliser pour l'étude, l'établissement des hypothèses ainsi que la prise des données afin d'établir les bilans en régime stationnaire. L'étape suivante a été la collecte de données additionnelles pour le modèle dynamique, l'établissement des hypothèses simplificatrices, la définition des objectifs de contrôle et le calcul des contrôleurs. Enfin, il a fallu intégrer le système de contrôle dans le modèle dynamique.

Le développement d'un modèle dynamique qui inclut les fines dans la pâte et leur effet sur la rétention.

La modélisation dynamique de la machine à papier et de son réseau d'eaux blanches exige de prendre en considération les effets des constituants de la pâte sur la rétention première. Les modèles dynamiques décrits dans la littérature ne tiennent

pas compte de cet effet. Généralement lors de la mise au point d'un modèle, la rétention première est un résultat du bilan en régime établi: on connaît tous les courants autour de la machine à papier et on calcule la rétention. En régime dynamique, la rétention peut varier dans le temps par exemple lorsque la composition de la matière fibreuse dans la pâte est affectée par des perturbations. L'incorporation d'un modèle de rétention dans lequel on considère l'effet des fines permet de déterminer la rétention lorsque les fines augmentent dans une certaine direction.

L'utilisation des profils de distribution de matière comme outils d'analyse de l'effet des perturbations.

Il est possible d'expliquer l'effet des perturbations en terme de leurs conséquences sur les profils de distribution de matière. Cette méthode permet une compréhension rapide de problèmes complexes comme les changements de la recirculation de cassés. Pour une configuration d'usine on détermine le profil en régime stationnaire et on compare la composition fibreuse de la feuille par rapport à celle de l'alimentation (pâte vierge). Après avoir pris en considération le type d'eau de dilution (eau claire ou eau blanche) pour faire la remise en pâte des cassés, on peut estimer dans quel sens va varier la rétention. Un autre cas traité dans le chapitre III a été les fluctuations de la concentration en fines dans la pâte vierge. La même analyse peut être utilisée pour le problème de la fermeture de circuits, par exemple

la réduction de la consommation d'eau fraîche dans les douches de la machine en réutilisant des eaux claires.

La caractérisation dynamique du réseau d'eaux blanches et l'impact du design.

Les chapitres II et III ont permis de répondre à un des objectifs de la recherche, la caractérisation de la dynamique du procédé et l'effet des perturbations pour une configuration d'usine pré-établie. On a aussi déterminé l'impact du design et de son système de contrôle dans la gestion des eaux blanches et la recirculation des cassés.

L'utilisation d'outils rigoureux pour la détermination de la commandabilité.

L'utilisation de l'analyse de commandabilité entrée-sortie dans l'industrie papetière est récente. Traditionnellement, l'outil le plus utilisé est la simulation dynamique. Le grand nombre d'essais nécessaires lors de la détermination de la performance du procédé et son système de contrôle rendent l'approche par simulation dynamique impraticable. La commandabilité entrée-sortie est un outil rigoureux qui permet de faire une analyse plus approfondie du procédé : on peut tenir compte des limitations imposées par le design, l'effet des perturbations ainsi que la saturation des variables à manipuler.

La détermination de la commandabilité de la machine à papier et son réseau d'eaux blanches.

Ce sujet a été développé dans le chapitre IV. On a proposé un modèle qui décrit les

effets des perturbations sur les variables de sortie telles que la rétention première et le grammage, ainsi que l'établissement des conditions qui doivent être respectées afin de ne pas dépasser des limites pré-établies. On a déterminé de telles conditions pour la consistance et la teneur en fines dans le courant de pâte circulant à travers la pompe de mélange.

L'application des conclusions de ce travail dans les usines de papier journal pourra apporter les bénéfices suivants:

- Une meilleure compréhension de la dynamique du procédé, des effets de l'augmentation de la fermeture des circuits d'eaux blanches, et des modifications du design d'usines.

- La réduction de la variabilité de la qualité du papier et un meilleur contrôle des variables de sortie telles que le grammage et la rétention par une meilleure surveillance des interactions générées à l'intérieur du circuit de pâte.

2. Perspectives

Bien que ce travail inclut le développement de procédures pour l'établissement de modèles dynamiques et l'analyse de la commandabilité, plusieurs aspects se rapportant au domaine restent à considérer. On peut citer les suivants :

- la mise au point de modèles détaillés des équipements comme la machine à papier afin de déterminer des bilans de matière plus précis, et son inclusion dans des modèles dynamiques;

- la caractérisation de l'effet des solides dissous sur la rétention et leur inclusion dans un modèle de rétention;

- le développement d'algorithmes de contrôle de la rétention. Le travail devrait inclure la caractérisation de l'effet des agents de rétention et la fermeture de la boucle de contrôle;

- la généralisation de la méthode de commandabilité entrée-sortie pour les procédés avec un haut degré d'intégration. La complexité des procédés à l'intérieur de l'industrie papetière rend difficile le développement de modèles analytiques. La disponibilité de puissants logiciels de simulation permet d'envisager le développement des outil d'analyse numérique.

BIBLIOGRAPHIE

ALEXANDER, D. S. et R. J. DOBBINS, J. R. (1977). The buildup of dissolved electrolytes in a closed paper mill system. Tappi Journal, 60 (12), 117-120.

AMIRI, R., MURRAY. T., WOOD, J., BARTLETT, D., CHISHOLM, B. et RENDELL, S. (1996). Interaction of pulp quality and papermaking: effects on sheet structure and linting. Paprican PPR-1200.

ASSELMAN, T. et PARIS, J. (1996). Fermeture des circuits d'eau dans les usines intégrées de papier journal: Étude de cas. Paprican PGRLR 656.

AUHORN, W. (1981). Web formation, drainage, and drying improved by means of chemical products. Wet-End Paper Technology Symposium, Munich.

BARNES, E. T. (1994). Water quality requirements for pulp and paper processes. Water Use Reduction in the Pulp and Paper Industry. Ed. Canadian Pulp and Paper Industry, Vancouver,1–10.

BIALKOWSKI, W. (1995). Control Objectives for Uniformity in Pulp and Paper Manufacturing. Chapter 7 in Process Control Fundamentals for the Pulp & Paper

Industry. Tappi Press, Atlanta.

BLACK, N. P. (1991). Changes in Paper Technology will Result in Major Changes in the Design and Capabilities of Paper Machines. Tappi Journal, 74 (1), 69–72.

BRISTOL, E. H. (1966). On a New Measure of Interactions for Multivariables Process Control. IEEE Trans. Auto. Control, AC-11, 133-134.

BRITT, K. W. et UNBEHEND, J. E. (1976). New methods for monitoring retention. Tappi Journal, 59 (2), 67–70.

BRITT, K. W. et UNBEHEND, J. E. (1985a). Water removal during paper formation. Tappi Journal 68 (4), 104–107.

BRITT, K. W. et UNBEHEND, J. E. (1985b). Fiber fractionation in paper machine systems. Tappi Journal 68 (9), 114–117.

BUSSIÈRE, S., A. A. ROCHE et PARIS, J. (1992). Analysis and control of white water network perturbations in an integrated newsprint mill," Pulp & Paper Canada, 93 (4), T97–T100.

CHANDRA, S. et KIRKMAN, A. G. (1985). Macros and energy balance in a blow heat recovery system", Tappi Journal, 68 (10), 118-21.

CHEN, J. (1995). Sensitivity integral relations and design trade-offs in linear multivariable feedback-systems. IEEE Transactions on Automatic Control, AC-40(10), 1700-1716.

CORSON, S. R. (1980). Fibre and fines fractions influence strength of TMP," Pulp & Paper Canada, 81 (5), T108-T112.

CROTEAU, A. P., et ROCHE, A. A. (1987). Study of broke handling and white water management using a dynamic simulation. Pulp & Paper Canada, 88 (11), T420–T423.

DE SILVEIRA, G., ZHANG, X., BERRY, R. et WOOD, J. R. (1996). Location of fines in mechanical pulp handsheets using scanning electron microscopy. Journal of Pulp and Paper Science, 22 (9), J315–J320.

FRANCIS, B. A. et ZAMES, G. (1984). On $H\infty$ optimal sensitivity theory for SISO feedback systems. IEEE Transactions on Automatic Control, AC-29(1), 9-16

GEAR, C. W. (1971). Simultaneous numerical solution of differential-algebraic

equations. IEEE Trans. Circ. Theory, CT-18(1), 89-95.

GESS, J. M. et KANITZ, R. A. (1996). Monitoring the stability of a paper machine. Tappi Journal, 79 (4), 119–126.

GRAFF, S. (1991). Analyse de la distribution de matière dans la partie humide d'une machine à papier. Thèse M.Sc.A., École Polytechnique de Montreal, Canada.

HAVRE, K. et SKOGESTAD, S. (1996). Effect of RHP Zeros and Poles on Performance in Multivariable Systems. UKACC Conference Control '96, Exeter, UK, 930-935.

HELLER, P., SCOTT, W. E. et SPRINGER, A. M. (1979). Potential operational problems under conditions of complete water reuse. Tappi Journal, 62 (12), 79–84.

HERGERT, R. E. et WAECH, T. G. (1979). Newsprint furnish solids retention. Tappi Journal, 62 (11), 79–81.

HOLM, R.A. (1983). Personal micros - The process flow as worksheet for a secondary fiber system", Tappi Journal, 66 (11), 92-93.

HOLM, R.A. (1984). Personal micros- Worksheet method for process simulation. Tappi Journal, 67 (3), 106-107.

JOHNSON, M. C. (1984). Wet-end material balance using an electronic spreadsheet. Tappi Journal, 67 (7), 109-111.

JONES, G. L. et KOEPKE, S. A. (1994). Simulation of dynamics and control of a two-ply paper machine. Tappi Journal, 77 (8), 111–120.

KHANBAGHI, M., MALHAME, R., PERRIER, M. et ROCHE, A. (1996). A statistical model of paper breaks in an integrated TMP-newsprint mill. Proc. 82nd Annual Meeting of the Technical Section CPPA, Montreal, A1-A6.

KROPHOLLER, H., WISEMAN, N. et HARRIS, E. (1994). Theory and practice in modelling paper machine white water systems. Appita Journal, 47(4), 301-304.

LEROY, C., SORIN, M., ASSELMAN, T., ORCCOTOMA, J. et PARIS, J. (1993). Projet C.D.T. C138, Le centre de dévelopment technologique de l'École Polytechnique de Montréal.

LINSTROM, R., MANFIELD, W. H., TKACZ, A. F. et MARDON, J. (1994). Coping

with an avalanche of breaks. Appita Journal, 47(2), 163-172.

LUQUET, G. (1995). Production stability on paper machines and pulp and white water circuits. Tappi Journal, 78 (10), 256–258.

MARDON, J., CHINN, G., O'BLENES, G. et TKACZ, A. (1997). Evaluating paper machine operation - 1. Equipment and operation. Proc. 83rd Annual Meeting, Technical Section CPPA, Montréal, A23-A41.

MARLIN, E. T. (1995). Process control: designing processes and control systems for dynamic performance. McGraw-Hill, New York, 588–593.

MARTON, J. et MARTON, T. (1976). Wet end starch: Adsorption of starch on cellulosic fibers. Tappi Journal, 59(12), 121-124.

McAVOY, T. J. (1983). Interactions analysis theory and application. Instrum. Soc. of America, Research Triangle Park, NC.

McDONALD, J. D., DAUNAIS, R., PIKULIK, I. T. et PYE, I. T. (1991). A new web transfer system for closing the draw between the last press and the dryer section. Pulp & Paper Canada, 92(3),T62-T65.

MOHLIN, U. B. (1977). Distinguishing character of TMP. Pulp & Paper Canada, 78 (12), 83–88.

MORARI, M. (1983). Design of resilient processing plants - III. Chemical Engineering Science, 38, 1881-1981.

MORARI, M. et ZAFIRIOU, E. (1989). Robust Process Control. Prentice-Hall, Englewood Cliffs.

NÖEL, A., PARIS, J. et ROCHE, A. (1993). Simulation of white water management strategies for an integrated newsprint mill. Pulp & Paper Canada, 94 (11), T383–T386.

ORCCOTOMA, J., CARRIÈRE, M., WALOSIK, S. et PARIS, J. (1995). Bilans détaillés à l'aide de tableurs, applications aux procédés des pâtes et papiers. Proc. of Conf. Technologique Estivale CPPA, Québec, 79-84.

ORCCOTOMA, J. A., STIÉE, D., PARIS, J. et PERRIER, M. (1996). Dynamics of fines distribution in a white water network : A modelling approach of the effect of fines on retention. Papier accepté pour publication. Pulp & Paper Canada.

ORCCOTOMA, J. A., PARIS, J., PERRIER, M. et ROCHE, A. A. (1997a). Dynamics of white water networks during web breaks. Papier accepté pour publication, Tappi Journal.

ORCCOTOMA, J. A., PARIS, J. et PERRIER, M. (1997b). Dynamic analysis of fibrous material and dissolved solids distribution in the wet-end of a newsprint mill." Papier soumis pour publication, Appita Journal.

ORCCOTOMA, J. A., PERRIER, M. et PARIS, J. (1997c). Paper machine controllability: effect of disturbances on basis weight and first-pass retention. Papier soumis pour publication, Journal of Process Control.

ORR, D.T. (1987). Spreadsheet: the budget approach to process simulation. Tappi Journal, Z1 ,79-82.

PANTELIDES, C.C. et BARTON, P.I. (1992). Equation-oriented dynamic simulation current status and future perspectives. European Symposium on Computers Aided Process Engineering, ESCAPE-2, Toulouse, S263-S285.

PELTON, R. H., JORDAN, B. D. et ALLEN, L. H. (1985). Particle size distributions of fines in mechanical pulps and some aspects of their retention in papermaking.

Tappi Journal, 68 (2), 91–94.

RAHMAN, L. (1987). The mechanism of fines and filler retention in newsprint furnishes. Tappi Journal, 70 (10), 105–112.

ROISUM, D. R. (1990). Runnability of paper - Part 2 : troubleshooting web breaks. Tappi Journal, 73(2), 101-106.

ROUNSLEY, R.R. (1983). Discrete event simulation of a broke system. Tappi Journal, 66(9), 69-73.

RUSHTON, J. D. (1985). Microcomputor spreadsheet calculations for a bleach plant. Tappi Journal, 68 (8), 132-135.

SCOTT, W. E. (1986). Fines management and control in wet-end chemistry. Tappi Journal, 69 (11), 30–34.

SCOTT W. E. (1991). Chap VII: Papermaking Chemistry. Pulp And Paper Manufacture Vol.7. Joint Textbook Committee of the Paper Industry, TAPPI.

SKOGESTAD, S. et MORARI, M. (1987). Implications of large RGA elements on

control performance. Ind. Eng. Chem. Res., 26, 2323-2230.

SKOGESTAD, S. (1994). Design Modifications for improved controllability. Proc. AIChE Annual Meeting, Nov. 13-18, San Francisco.

SKOGESTAD, S. et POSTLETHWAITE, I. (1996). Multivariable feedback control. John Wiley & Sons Ltd., Chichester, England.

Speedup User Manual - Release 5.4 (1993). Aspen Technology Inc. Ed., Cambridge.

SPRINGER, A. M., DULLFORCE, J. P. et WEGNER, T. H. (1985). The effects of closed white water systems contaminants on strength properties of paper produced from secondary fibers. Tappi Journal, 68 (4), 78-82.

Standard Testing Methods (1993). Technical Section. Canadian Pulp and Paper Association, CPPA, Montréal.

Tables de statistiques (1995). L'Association canadienne des pâtes et papiers, CPPA, Montréal.

WELLS, H. A., GORDON, M. A. et ABBOTT, G. (1986). Process simulation using

spreadsheets. Tappi Journal, 69, 98-100.

WOLFF, E. A. (1994). Studies of control of integrated plants. Doctoral thesis, University of Trondheim, Norwegian Institute of Technology.

ZIEGLER, J. G. et NICHOLS, N. B. (1942). Process lags in automatic-control circuits. Transactions of the A.S.M.E. 65, 433-444.

ANNEXE A

DYNAMICS OF FINES DISTRIBUTION IN A WHITE WATER NETWORK

A modelling approach of the effect of fines on retention.

J.A. Orccotoma, D. Stiée, J. Paris, and M. Perrier

École Polytechnique, Département de génie chimique C.P. 6079,

Succ. Centre-Ville, Montréal, Qc, H3C 3A7

(Accepted for publication in Pulp & Paper Canada)

KEYWORDS: Fines, Retention, White water networks, Dynamic Simulation.

ABSTRACT

A dynamic model of a typical white water network of a newsprint mill has been developed to study the effect of disturbances on the fibrous material distribution. The mass profiles show a progressive fines buildup in the wet-end; the highest observed fines content is at the headbox. Low fines retention implies that fines are being continuously recycled back in the white water. The effect of headbox fines on retention has been modeled by using a linear function, the parameters of which were obtained by mass balance around the machine forming zone.

RÉSUMÉ

Un modèle dynamique du réseau d'eaux blanches d'une usine de papier journal a été développé afin d'étudier l'effet de perturbations sur la distribution de matière fibreuse. Les profils de matière fibreuse indiquent qu'il existe une accumulation progressive de fines dans le bout humide; la concentration la plus élevée se trouve dans la caisse d'arrivée. La faible rétention de fines implique que les fines sont continuellement recyclées dans les eaux blanches. L'effet de fines dans la caisse d'arrivée sur la rétention a été représenté par un modèle linéaire dont les paramètres ont été obtenus par bilans de matière sur la section de formation de la machine.

INTRODUCTION

Current trends in integrated newsprint mills are resulting in increasing fines recirculation between the pulp preparation section and the paper machine. Systems closure, the development of mechanical pulping and higher filler usage have all contributed to this situation [1]. Fines management is becoming an important issue for most mills and is likely to remain so unless new developments lead to the reduction of fines generation during pulp refining and/or increased retention in the paper machine.

Process simulation is a powerful tool to study the distribution of fibrous materials in a pulp and white-water network. The complexity of the process, however, requires a systematic approach, which involves several successive tasks such as data collection (logged and sampled), diagram development and hypotheses formulation [2].

The objectives of this work were to determine the steady-state fines distribution in the wet-end of a paper mill, and to evaluate the effects of dynamic disturbances on that distribution. The disturbance considered was the fines content variation in the fresh pulp supplied to the process.

WET-END FLOWSHEET

The process flowsheet on which this study was based is shown on Figure A.1. It represents the wet-end of a single line newsprint mill and includes the stock preparation area, the machine white water network and the broke repulping system. The feed to the stock preparation area is pulp initially at 8% consistency. After a first dilution to 3% consistency, the pulp is sent to the mixing chest where it is mixed with recycled broke and recovered fibers from the saveall. In the machine chest a new consistency adjustment is made, by dilution to 2.8%. At this point the pulp is well homogenized. The next stages are conditioning, cleaning and screening, the pulp is further diluted with white water from the machine collected in the silo. The pulp delivered to the paper machine is at a final consistency of 0.9%. The large amount of white water produced in the machine is used mainly for pulp dilution. The excess is sent to the saveall for fibers recovery. The mill is assumed to have a 600 t/d production capacity and a fresh water consumption of 10 m^3/t of paper produced. Main reservoir dimensions are given in Table A.1.

FINES PROPERTIES AND RETENTION

Much research has been devoted to the characterization of fines, their properties, their impact on the process and on the quality of the paper produced. Only the work most pertinent to the subject of this paper will be reviewed here, i.e. basic properties, fines retention and how it is affected by specific process disturbances.

Papermakers have defined fines in several different ways. Britt and Unbehend [3] define fines as that part of the furnish passing through a 200-mesh screen in a Bauer-McNett classification test. This definition of fines has been used in this work. The material retained by coarser screens constitutes the fibers. In modern integrated mills, fines may account for 50% or more of the fibers in the headbox. Scott [4] distinguishes three types of fines: primary fines which are naturally present in a wood pulp, secondary fines which are produced during the pulp refining operation and tertiary fines generated by the shear action of pumps, agitators and other equipment or by abrasion on the wire during the sheet formation.

Fines and fibers affect papermaking chemistry through their surface and colloid properties: sorption capacity, swelling behaviour and ion-exchange properties. These are controlled to a large extent by the surface area, surface charge, and surface chemical composition of fibers and fines. Because of their small particle size, fines have a large surface area per unit weight and their contribution to these phenomena is disproportionate to their mass fraction in the fibrous material. Marton and Marton [5] have reported that the specific surface area of fines are 5 to 8 times that of fibers. Fines also have a major influence on paper machine drainage performance due to their high water sorption capacity (2 to 3 times that of fibers) which causes them to behave much like a gel. Depending on their size and shape, fines can fulfill structural functions. Acting like small fibers they fill interstices and bridge gaps in

the fiber structure; when of laminar shape they deposit on the outside of fibers and occasionally they may assist in forming a bond between two fibers [6].

The fines concentration in any particular furnish depends on factors such as the extent of refining applied, the amount of broke utilised, the first pass retention performance of the paper machine, and the amount of saveall cloudy white water used throughout the system [4]. The fines vs. fibers distribution in a pulp furnish and that of the resulting paper sheet will not necessarily be the same [7]. On commercial paper machines, where white water with a high level of fines is recirculated, there is a buildup of fines in the wet-end. Thus, in a paper mill several fiber-length distributions may be observed at a given time.

Retention of fibers and fines is important for the papermaker because it affects raw materials efficiency. Changes in fines content during paper production may also cause variations in drainage and affect the properties of the final product. Fines content in the headbox of a paper machine is affected mainly by feedstock quality. This is particularly crucial to mills operating at high white-water systems closure. Consistency controllers currently used in mills regulate the total fiber content, while fine fraction remains a non controlled variable, abrupt variations on fines content may cause instability in paper machines [8]. Scott [9] has suggested that a process control strategy for fines retention could be developed on the basis of fines and

charges content in the wet-end network of a paper mill.

The first pass retention of a material is defined as the weight percentage of the material fed to the paper machine which is retained in the paper sheet. It is an important performance index which is determined in mills, mainly, from consistency measurements around the forming zone of the machine. As first pass retention of fines (R_f) and fibers (R_F) may be considered essentially constant in the vicinity of an operating point, then by performing mass balances the following relationship can be established between first pass retention, R, in the forming zone and the fines fraction in the headbox, y_f:

$$R = (R_f - R_F) y_f + R_F \qquad (A.1)$$

The fines fraction is defined with respect to the total fibrous material in a pulp or white water stream:

$$y_f + y_F = 1 \qquad (A.2)$$

Fibers are retained on the wire preferably to fines, and the slope of equation (A.1) is negative which is in agreement with experimentally observed tendencies [9, 10, 11]. The assumption of constant partial retention, R_f and R_F, is valid for a machine at constant operating conditions (headbox consistency, wire speed, jet speed..), for a given furnish and given additives, and provided that the fines fraction does not

vary too broadly. Under those conditions, R_f and R_F can be estimated from steady-state balances and equation (A.1) subsequently utilized to predict R as a function of y_f. The simplified paper machine on Figure A.1 has two main white water stream leaving the paper machine forming zone, then in order to estimate the intermediate composition equation (A.1) was applied twice. Table A.2 gives the values obtained by mass balance based on data from an actual mill [2, 12] for each section and the overall first pass retention (R), is the product of the retention in each section.

SIMULATION

The model includes the transient mass balances for fibers, fines and water, over all major process operations. The resulting set of algebraic and ordinary differential equations was solved by using SPEEDUP [13], an equation-oriented dynamic simulator, installed on an IBM RISC 6000/375 workstation. The main hypothesis made to develop the model was that only the equipments with large residence times contribute to the dynamic behaviour of the system; they are the reservoirs for which characteristic parameters have been given in Table A.1. All reservoirs were considered as perfectly mixed and adequately represented by the classical continuous stirred tank (CST) model. Similarly, delays introduced by flows in the piping system and sensors were neglected.

A simulation in the steady-state mode was first performed to establish the base case,

i.e. the nominal expected operating conditions of the process. The results of this simulation were then used to initialize the dynamic case. The disturbance studied was the variation of the fines content in the fresh pulp from the base case value of 20% to 22%.

RESULTS AND DISCUSSION

Steady-state fines distribution

During sheet forming, fibers are preferably retained on the wire, therefore white water from the paper machine contains important amounts of fines that must be recycled back to the main pulp stream. The effect of white water reuse for pulp dilution is a progressive buildup in the fines content and an increase of the total fibrous material flowing through the network. Figure A.2 illustrates simultaneously the fines buildup and the total fibrous material at key points in the network. For an initial fines content of 20% in the fresh feed, a fines buildup of 58.1% in the headbox is observed. This large increase is due to the cascading effect of successive dilutions by white water rich in fines. In the mixing chest, which receives the pulp from the stock tank, the broke, the fibers recovered from the saveall and the overflow from the machine chest, the fines content is 28.5%. At the machine chest, this value increases to 29% because of further dilution. Two additional aspects should be noted: the amount of fibers is relatively constant and, the composition of the wet

paper sheet entering the press section is different from that of the fresh pulp. Lower paper fines content than fresh pulp is explained by the fact that a certain amount of fines is extracted from the wet-end as rejects from the cleaners and screens.

Dynamics of fines distribution

The disturbance consists of a single step in fines content from 20 to 22%. As expected, the reservoirs act as buffers dampening the effect of this disturbance. The outlet pulp stream from the stock tank, shows a smooth response equalizing the inlet stream fines content after approximately 200 minutes. As pulp flows throughout the network the increase in fines becomes less sharp; finally at the headbox the fines variation from 58 to 60% (less than 5%) causes a drop in retention from the initial value of 48.6 to 47.2%. Any decrease in retention means more fines passing through the wire, then it should be expected that more fines in the white water would cause an increase in fines content and consistency, as indicated on Figure A.3. As there is no consistency control on the short recirculation loop, the variations on the white water composition have as consequence the slight increase of the pulp consistency in the headbox. During simulation it was supposed that there were no feedback action between basis weight at the reel and the pulp flowing through the mixing pump, for this reason basis weight varies freely. The decrease on the basis weight observed is thus in agreement with this hypothesis.

The fines content in the feed may vary because more or less fines are being generated in the refiners, or because the fraction of one of the pulp component (mechanical pulp, de-inked pulp, broke) has been altered. From the steady-state fines analysis, we observed differences in the composition of the fresh pulp and the paper web leaving the forming zone. For this reason any change on broke reuse after a papersheet break may affect the fines and fibers distribution. Broke recirculation may become a delicate issue when there are restrictions on white water availability, or constraints on the allowed broke reuse rate to the process.

CONCLUSIONS

Fines buildup in the white water network of a newsprint mill is the result of the low fines retention on the wire and the multiple pulp dilutions with white water. Fibers are more uniformly distributed because of their high retention on the paper machine. The above results show that the fibers and fines distribution in the wet-end of a newsprint mill is very sensitive to process disturbances and pulp composition.

The simple retention model used in this study was obtained from mass balances around the forming zone of the machine. It has allowed to verify tendencies observed during paper production. The effect of fines content in the headbox on the first pass retention was clearly illustrated.

ACKNOWLEDGMENTS

This work was supported by a Strategic Grant from the Natural Sciences and Engineering Research Council of Canada and the Carl Winkler Memorial Fellowship of the Pulp and Paper Research Institute of Canada. SPEEDUP was used under an academic license from Aspen Technology to Ecole Polytechnique.

REFERENCES

1. BARNES, E. T., Water Quality Requirements for Pulp and Paper Processes", in "Water Use Reduction in the Pulp and Paper Industry, Monograph by H. A. Simons Ltd., NLK Consultants Inc., Sandwell Inc., First Edition, Vancouver, BC (1994), pp. 1-10.

2. ASSELMAN, T. and PARIS, J., Fermeture des Réseaux d'Eaux de Procédé dans une Usine Integrée de Fabrication de Papier Journal - Étude de Cas. PGRLR 656, Paprican, December 1996.

3. BRITT, K.W. and UNBEHEND, J.E., New Methods for Monitoring Retention. Tappi Journal 59 (2): 67-70 (1976).

4. SCOTT W. E., Papermaking Chemistry, Pulp And Paper Manufacture" Vol.7, chap. VII, Joint Textbook Committee of the Paper Industry, TAPPI ed. (1991).

5. MARTON, J. and MARTON, T., Wet End Starch: Adsorption of Starch on Cellulosic Fibers. Tappi Journal 59 (12): 121 (1976).

6. DE SILVEIRA, G., ZHANG, X., BERRY, R., WOOD, J. R., Location of Fines in Mechanical Pulp Handsheets Using Scanning Electron Microscopy. Journal of Pulp and Paper Science 22(9): J315-J320 (1996).

7. BRITT, K.W. and UNBEHEND, J.E., Fiber Fractionation in Paper Machine Systems. Tappi Journal 68(9): 114 (1985).

8. LUQUET, G., Production Stability on Paper Machines and Pulp and White Water Circuits. Tappi Journal 78(10): 256-258 (1995).

9. SCOTT, W., Fines Management and Control in Wet-End Chemistry. Tappi Journal 69 (11): 30 (1986).

10. HERGERT, R. E. and WAECH, T. G., Newsprint Furnish Solids Retention. Tappi Journal 62 (11): 79-81 (1979).

11. AMIRI, R., MURRAY, T., WOOD, J., BARTELL, D., CHISHOLM, B. and RENDELL, S., Interaction of Pulp Quality and Papermaking - Effect on Sheet Structure and Linting. PPR-1200 Paprican, 1996.

12. ORCCOTOMA, J., CARRIÈRE, M., WALOSIK, S. and PARIS, J., Bilans Détailles à l'Aide de Tableurs: Applications aux Procédés des Pâtes et Papiers. ACPP Section Technique, Conf. Technologique Estivale, Québec (1995), prétirés 79-84.

13. Speedup User Manual - Release 5.4, Aspen Technology Inc. Ed., Cambridge - Mass. (1993).

TABLE A.1: Reservoir dimensions.

Reservoir	Capacity (m^3)	Height (m)
Stock Tank	900	12
Mixing chest	240	5
Machine chest	265	5
Silo	50	7
WW chest	200	5
Couch pit	90	3
Clear WW tank	3000	17
Broke tank	1900	15

TABLE A.2: Sectional retention in the paper machine.

Item	First section (%)	Second section (%)
R_f	32.2	48.6
R_F	95.0	99.5
R	58.5	83.2
y_f	58.1	32.0

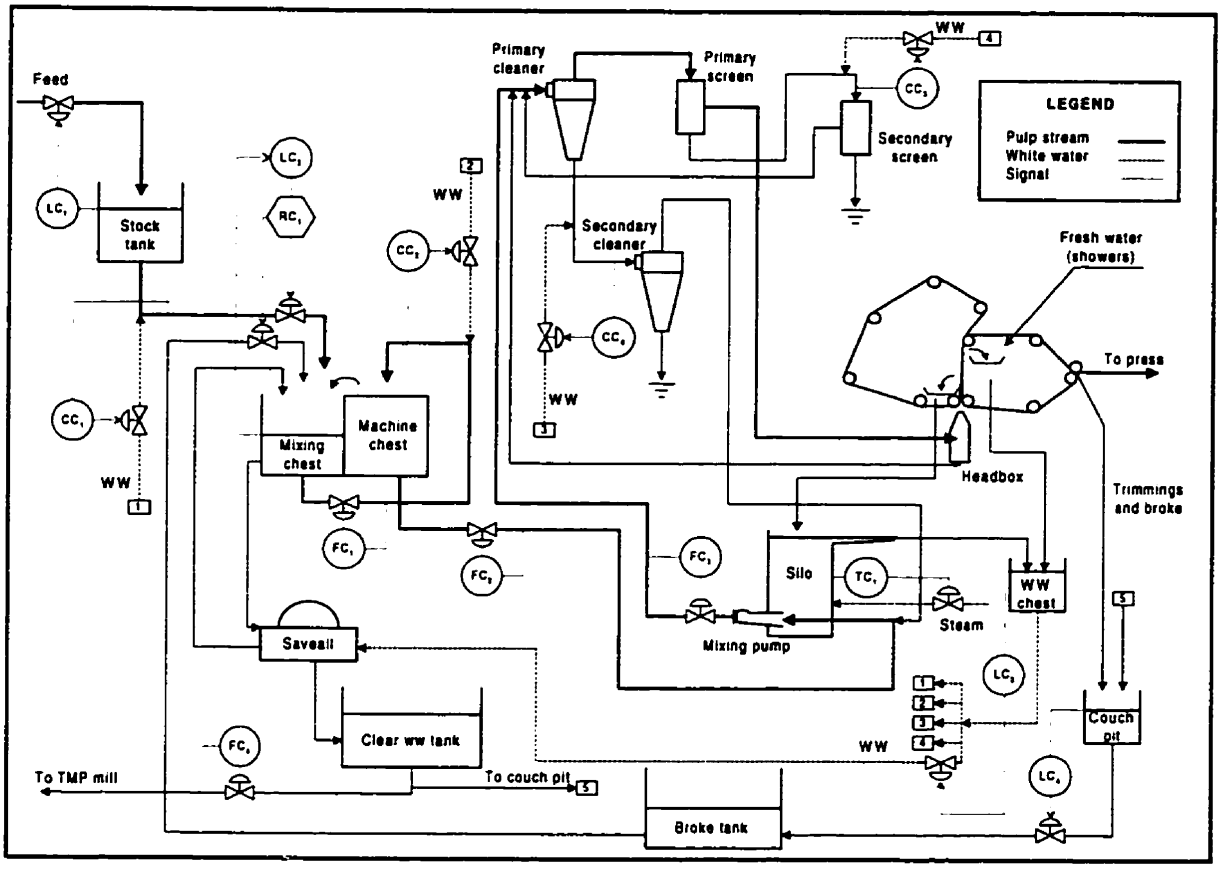

Figure A.1: Wet end flowsheet.

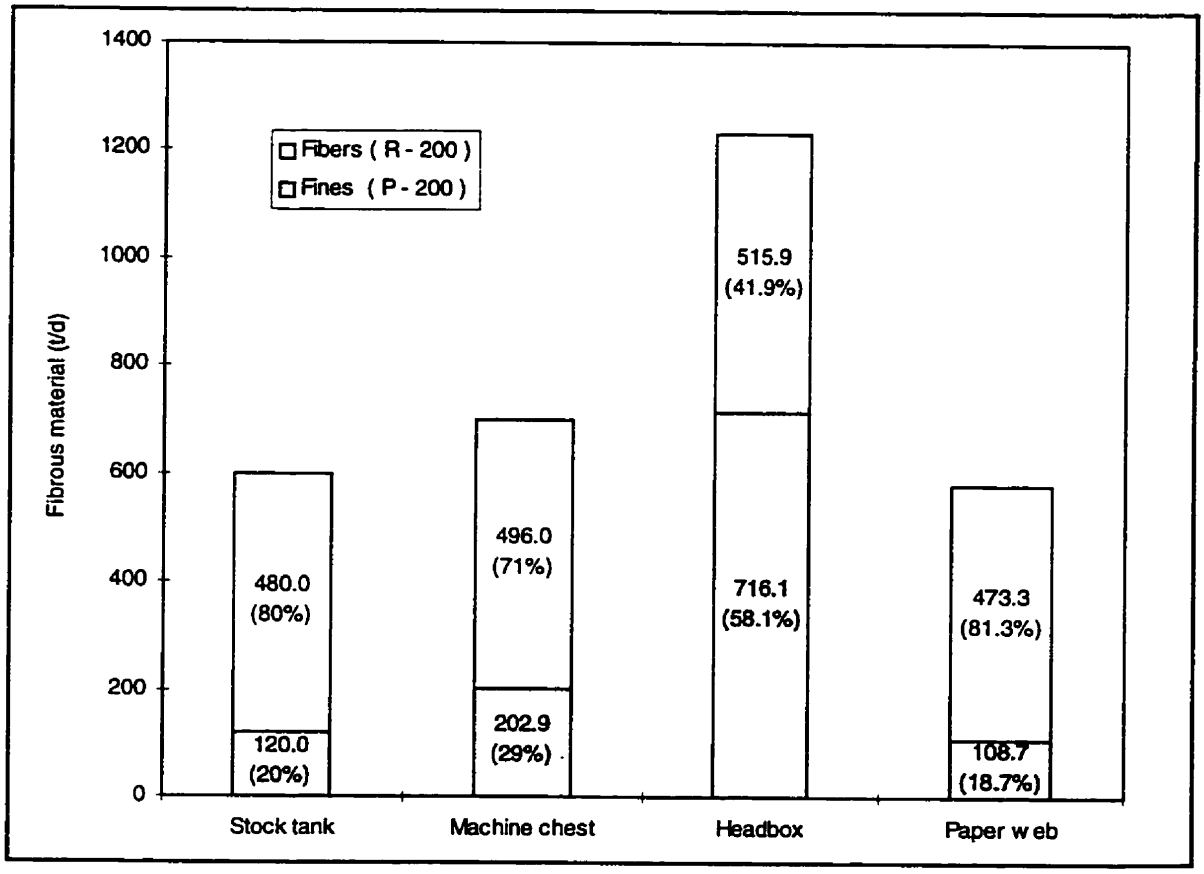

Figure A.2: Fibrous material distribution in the wet end.

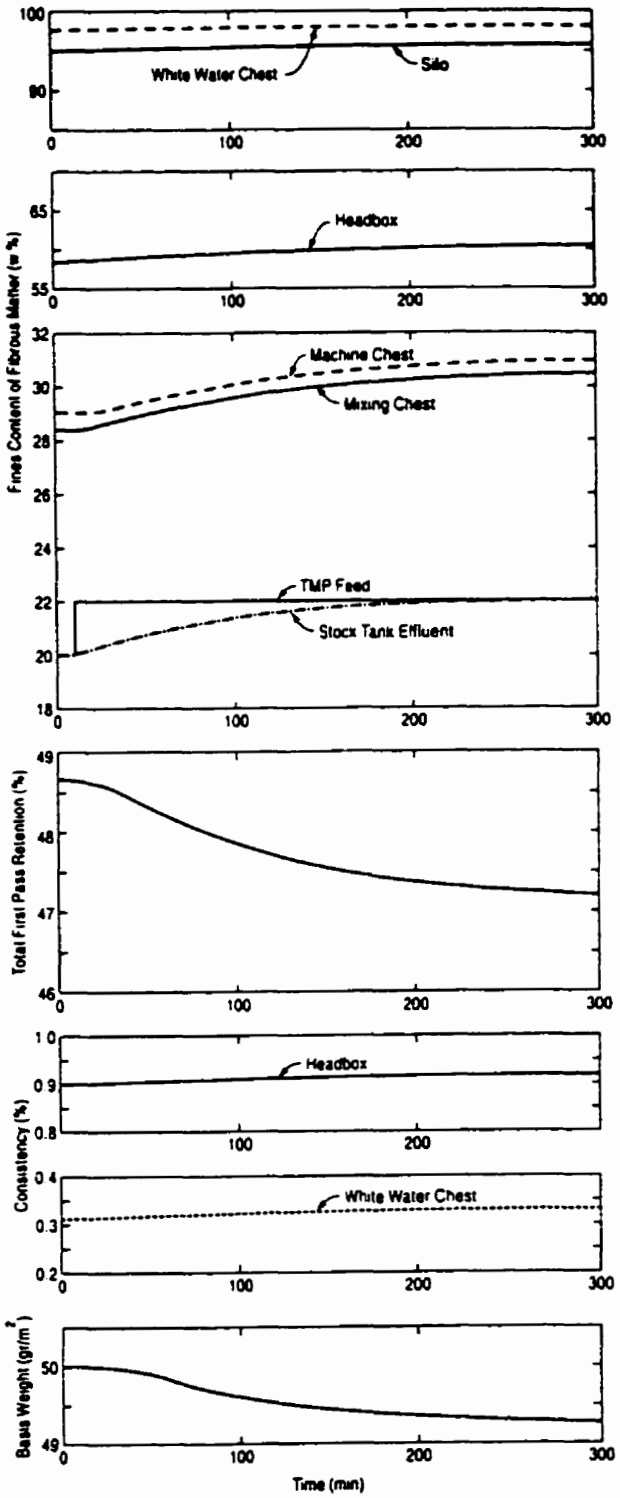

Figure A.3: Effect of a step change in fines content of the feed to the wet end

ANNEXE B

BILANS DÉTAILLÉS À L'AIDE DE TABLEURS, APPLICATION AUX PROCÉDÉS DES PÂTES ET PAPIERS

J.A. Orccotoma, M. Carrière, S. Walosik et J. Paris

École Polytechnique, Département de génie chimique C.P. 6079,

Succ. Centre-Ville, Montréal, Qc, H3C 3A7

(Papier présenté à la conférence estivale de l'ACPP, 1995)

MOTS CLÉS: Bilan de matière, simulation de procédés, pâtes et papiers.

SOMMAIRE

Depuis leur introduction sur le marché, des améliorations apportées à la structure des tableurs leur confèrent une plus grande flexibilité, la possibilité de traiter des calculs plus complexes et surtout de mettre en oeuvre plus aisément les calculs par itération. Ceci a ouvert la voie à l'utilisation de ces logiciels pour la réalisation de bilans sur des procédés à configuration complexe comprenant de nombreuses boucles de recirculation comme c'est le cas dans la fabrication intégrée des pâtes et papiers. On présente trois exemples de bilans détaillés de tels procédés réalisés avec le tableur Excel.

INTRODUCTION

Des bilans de matière et d'énergie détaillés et à ce jour constituent une base d'information très utile sur un procédé. Qu'il s'agisse de la conduite habituelle du procédé, de l'évaluation de son efficacité par opération ou globalement, ou encore de la planification de changements, l'analyse du procédé passe par l'établissement des bilans. Pourtant, on ne dispose pas toujours de bilans détaillés et à ce jour dans les usines de pâtes et papiers. On peut donner plusieurs raisons à ce fait. L'établissement de bilans exacts est une tâche ardue nécessitant la mise en oeuvre de moyens relativement importants. La durée de vie d'un bilan, une fois établie, est par contre de courte durée à cause des changements subséquents aux conditions d'opérations ou à la configuration du procédé. Enfin, un bilan est une photographie

du procédé à un moment donné, très informative en soi, mais encore beaucoup plus utile si on peut l'utiliser par la suite pour étudier l'impact de changements éventuels au procédé ce qui implique la réalisation des calculs à l'aide d'un programme informatique convivial. L'utilisation de tableurs facilite considérablement la tâche. On présente trois exemples réalisés avec le logiciel Excel qui illustrent le traitement des boucles de recirculation, des bilans de matière tenant compte d'une gamme étendue de constituants.

PROBLÉMATIQUE DES BILANS

L'établissement des bilans sur un procédé comprend quatre étapes successives que l'on doit souvent répéter plusieurs fois dans un processus itératif de développement et de validation de l'information:

- établissement du diagramme d'écoulement à jour du procédé par relevé des courants existants;
- recensement et détermination des caractéristiques de certains courants clés;
- mise en oeuvre des calculs: formulation des objectifs, des hypothèses et simplifications, programmation;
- validation des résultats.

Le nombre d'itérations et la quantité de travail à fournir dépendra évidemment de

la situation de départ. La réalisation de la deuxième tâche nécessitera, dans certains cas, le prélèvement et l'analyse d'échantillons.

On dispose, pour effectuer les calculs, de deux types de logiciels: les logiciels de simulation de procédé et les tableurs ou chiffriers. Les premiers permettent de réaliser une véritable simulation du procédé grâce à l'utilisation de modèles d'opérations unitaires, de banques de données thermodynamiques et de modèles théoriques ou empiriques des propriétés de courants. Certains ont été développés spécialement pour les besoins de l'industrie papetière mais beaucoup d'autres ont été conçus de façon à pouvoir être utilisés pour une large gamme de procédés de transformation.

Les plus performants de ces logiciels permettent une analyse très avancée du procédé, par contre, ils exigent un environnement informatique puissant, le temps d'apprentissage peut être important et surtout le coût d'achat ou de licence est à la mesure de leur performance potentielle. Très utiles en R&D et en ingénierie, ces logiciels excèdent généralement les besoins et les possibilités d'une usine papetière. Les tableurs sont des logiciels qui permettent la manipulation de nombres constituant une matrice par l'exécution d'opérations sur des colonnes, des lignes ou des éléments grâce à un processus d'adressage. Dans le cas de bilans, les colonnes pourront correspondre aux courants et les lignes aux attributs de courants: débit

total, débits partiels ou concentrations, température, etc.

Un tableur ne permet pas d'effectuer de simulations du type réalisable avec les logiciels du premier groupe. Par contre, ils sont tout à fait appropriés pour l'exécution de bilans de matière et d'énergie et l'investissement en temps d'apprentissage, coût d'achat et environnement informatique est beaucoup plus modeste. Les caractéristiques des tableurs par comparaison aux logiciels de simulation et leur intérêt pour l'industrie papetière ont déjà été analysés notamment par Holm (1984), Wells et al., (1986) et par Orr (1987) et des exemples d'application à certaines opérations spécifiques ont été présentés: récupération de chaleur de vaporisation (Chandra et Kirkman, 1985), blanchiment de pâte Kraft (Rushton, 1985) et partie humide de la machine (Johnson, 1984). Les exemples présentés ici se distinguent par l'ampleur des systèmes étudiés, par le degré de détails et par l'organisation des calculs.

La mise en oeuvre des calculs en séquence, lorsque cela peut se faire, est simple, malheureusement elle s'applique rarement aux grands ensembles des pâtes et papiers à cause de la présence de nombreuses boucles de recirculation d'eaux blanches et de pâtes. Une propriété fondamentale des calculs par itérations est qu'ils ne produisent pas une solution approchée par approximations successives. Ce mode de calcul engendre donc une erreur résiduelle systématique qui est la différence

entre la solution acceptée et la solution vraie mais inconnue. Le report de cette erreur dans les calculs subséquents et l'effet multiplicateur dans les systèmes à boucles d'itération multiples (surtout si elles sont imbriquées ou emboîtées plutôt que séquentielles) peut provoquer éventuellement la divergence des calculs (i.e., les résultats successifs s'éloignent de plus en plus de la solution vraie).

Éviter la divergence des calculs de bilans effectués à l'aide d'un tableur quand le nombre de boucles d'itération est élevé peut être délicat. La capacité d'un algorithme de calcul à converger malgré l'accumulation d'erreurs résiduelles est sa robustesse. On peut améliorer la robustesse des calculs en prenant certaines précautions: choix de critères de convergence très faibles (le critère de convergence est le paramètre qui contrôle l'arrêt des cycles de calcul), choix des valeurs initiales des attributs inconnus (on peut souvent estimer assez précisément les valeurs cherchées), ordre des calculs permettant d'exploiter l'information disponible ou développée dans des étapes antérieures. La réalisation de calculs par itération était difficile et d'envergure limitée avec les premiers tableurs commerciaux, elle nécessitait une programmation difficile et parfois rebutante. Des améliorations très importantes ont été apportées aux versions subséquentes permettant d'effectuer facilement l'adressage en boucle de cellules ou adressage dit "circulaire" qui est en fait la mise en oeuvre automatique de cycles de calculs par itération.

Comme les exemple subséquents le montrent, on peut maintenant utiliser un tableur pour effectuer des bilans complets et détaillés sur les procédés de pâtes et papiers à configuration complexe. Pour effectuer les calculs de bilan, l'utilisateur doit définir les opérations à effectuer sur les colonnes, les lignes ou les éléments de la matrice de nombres. Cette information exprime mathématiquement les relations du bilan. Ceci peut se faire à l'aide de commandes spécifiques au logiciel et de programmation simple.

CAS 1: BILANS DE MATIÈRE SUR UN CIRCUIT D'EAUX BLANCHES

Cet exemple présente une approche particulière à l'établissement de bilans simples, i.e. sur l'eau et les solides en suspension, pour le réseau d'eau blanche d'une machine à papier. Le schéma bloc du réseau est présenté à la Figure B.1. La machine est alimentée en PTM et en pâte désencrée. Une certaine quantité d'eaux blanches de la machine est recyclée vers la ligne de PTM pour laquelle on a établi les bilans globaux; cette section de l'usine est ainsi représentée par un bloc unique dans le réseau de la Figure B.1.

On a aussi tenu compte de l'apport d'eau associé à l'alimentation en produits eux-mêmes. Les courants sont caractérisés par deux attributs, le débit total et la consistance (i.e. fibres et toutes autres matières solides en suspension sont traitées comme un seul constituant). On a structuré la séquence des calculs de façon à

réduire le nombre de boucles d'itération nécessaires par l'exploitation optimale de l'information disponible sur le réseau. Cette information était constituée de données d'opérations disponibles à l'usine et notamment des paramètres opératoires intrinsèques de la machine. La séquence des calculs et les résultats obtenus sont résumés au Tableau B.1. Outre les valeurs indiquées en gras dans ce tableau, on a aussi utilisé les paramètres donnés au Tableau B.2. La plupart des courants ont pu être déterminés en mettant à profit l'information disponible dans des bilans particuliers soit en tête de calculs, BP(o) soit en cours de calculs B(x). On a commencé les calculs à partir du bout sec de la machine remontant le diagramme d'écoulement à rebours.

CAS 2: BILANS DE MATIÈRE ET D'ENTHALPIE SUR UN CIRCUIT DE CASSÉS

Cet exemple présente l'extension du cas précédent aux bilans enthalpiques pour le circuit de remise en pâte des cassés présenté à la Figure B.2. La capacité calorifique, ainsi que le poids spécifique, de chaque courant ont été calculés comme moyenne pondérée des propriétés correspondantes de l'eau et des solides en suspension (fibres), le bilan de matière étant comme dans le cas précédent, limité à ces deux constituants. On a négligé les pertes de chaleur dans le réseau d'eau et de pâtes sauf dans la machine à papier où on a fixé des différences de températures entre les courants clés d'entrées et de sortie. Les paramètres utilisés pour les calculs sont

présentés au Tableau B.3. Les bilans ont été calculés à l'aide des mêmes algorithmes que dans le cas précédent, le calcul de l'enthalpie ajoutant une équation supplémentaire. Les résultats sont résumés au Tableau B.4. Le calcul des bilans combinés de matière et chaleur permet de déterminer la quantité de vapeur requise et son impact sur le réseau selon diverses conditions de remise en pâte des cassés.

CAS 3: BILANS DE MATIÈRE DÉTAILLÉS SUR UN ATELIER DE DÉSENCRAGE

Des bilans de matière ont été effectués sur l'atelier de désencrage présenté à la Figure B.3 pour rendre compte de la distribution des constituants suivants dans le système: eau, matière solide en suspension (fibres classées par dimension et fines), matières dissoutes, ions (Na^{+}, Ca^{++}, $A1^{+++}$), cendres (totales et des solides en suspension). Les algorithmes de calculs sont à nouveau essentiellement les mêmes que pour les exemples précédents. Néanmoins, la particularité de cet exemple, i.e. le degré dans la composition de la matière, a nécessité la mise en oeuvre d'un processus par étapes d'une part et le recours à la prise de données expérimentales en usine d'autre part. Les données de design mises à la disposition ont constitué l'information initiale sur le procédé: débits de matière solide (dissoute et en suspension), taux de rejets, taux de recirculation.

Cette information a été plus tard calibrée et mise à jour par échantillonnage en

usine. L'analyse du procédé a ensuite permis de déterminer le nombre minimum de consistances à fixer pour pouvoir établir les bilans sur l'eau. Ces consistances ont été mesurées. Les taux de rejets dans les différentes unités ont été ajustés grâce aux bilans d'eaux exacts ainsi obtenus. Dans une dernière étape, les coefficients de partage pour chaque constituant dans chaque unité ont été déterminés.

CONCLUSION

Les exemples présentés illustrent la puissance de calcul, la flexibilité et la versatilité de la nouvelle génération de tableurs. Certes, ils ne permettent pas le niveau d'analyse phénoménologique et prédictive des logiciels de simulation de procédé et ils sont moins robustes dans le traitement des boucles d'itération multiples tout en exigeant une formulation du problème plus approfondie et plus détaillée: expression mathématique des bilans sur chaque opération unitaire, approche heuristique à la mise en oeuvre des boucles d'itération, procédure par étape pour les bilans comprenant une gamme étendue de constituants.

Néanmoins, ils ont des avantages certains qui devraient en faire des outils privilégiés de l'ingénieur de production, de support technique ou de design: coût très modeste, facilité d'apprentissage et convivialité d'utilisation, transportabilité et flexibilité dans le traitement et la présentation des résultats. La détection des erreurs peut être délicate mais ne devrait pas être rebutante à l'ingénieur qui a une

bonne connaissance du procédé étudié. La compréhension du fichier d'instruction (i.e. la programmation des calculs) peut être un obstacle au transfert entre utilisateurs mais le problème peut être surmonté grâce à une structure logique et transparente du programme et à une documentation adéquate.

RÉFÉRENCES

- Chandra, S. and A.G. Kirkman, "Macros and Energy Balance in a Blow Heat Recovery System", Tappi J., 68 (10) 118-21 (1985).
- Holm, R.A., "Personal Micros - The Process Flow as Worksheet for a Secondary Fiber System", Tappi J., 66 (11) 92-3 (1983).
- Holm, R.A., "Personal Micros- Worksheet Method for Process Simulation", Tappi J., 67 (3) 106-7 (1984).
- Johnson, M.C., "Wet-End Material Balance Using an Electronic Spreadsheet", Tappi J., 67 (7) 109-11 (1984).
- Orr, D.T., "Spreadsheet: the Budget Approach to Process Simulation", Tappi J., 71 79-82 (1987).
- Rushton, J.D., "Microcomputor Spreadsheet Calculations for a Bleach Plant", Tappi J., 68 (8) 132-5 (1985).
- Wells, H.A. Jr., M.A. Gordon-Clark and G. Abbott, "Process Simulation Using Spreadsheets", Tappi J., 69 98-100 (1986).

REMERCIEMENTS

Ce travail a pu être réalisé grâce à la collaboration exceptionnelle du personnel technique de trois usines papetières québécoises qui ont servi de base aux exemples présentés. Les analyses d'échantillons ont été réalisées au laboratoire du Centre de recherche en pâtes et papiers de l'UQTR et au laboratoire SLOWPOKE de l'École Polytechnique. Ce travail a également bénéficié du support financier du CRSNG (subvention stratégique), du FCAR et d'Hydro-Québec.

TABLEAU B.1: Cas 1, séquence des calculs et résultats.

1. Courant		2. Séq et mode de calcul	3. Débit total (t/d)	4. Cons. (%)	5. Débit solides (t/d)
N°	Description				
1	Copeaux	BT(20)	787.53	***58.00***	457
2	Vapeur de préchauffage		***108.00***	***0***	0
3	Sulfite		***14.40***	***0***	0
4	Vapeur des raffineurs		***720.00***	***0.5***	3.6
5	Égout de l'usine PTM		***1008.00***	0.68	***6.9***
6	Pâte haute densité	BP(11)	5447.32	***8.50***	463.02
7	Hydrosulfite		***57.60***	***0.00***	0.00
8	Sortie blanchiment	BT(24)	10496.31	***4.60***	482.83
	Sortie du cuvier de nivellement	BT(26)	12963.73	***3.80***	492.62
9	Pâte de sweetener		***2592.00***	***3.80***	98.50
10	Pâte vers le cuvier de la machine	BT(27)	10371.73	***3.80***	394.13
11	Eau blanche pauvre du ramasse pâte	BP(12)	9160.90	***0.17***	15.5735
12	Dilution de la pâte désencrée	BC(17)	1488.79	***0.25***	3.72
13	Dilution cuvier de la machine	*BC(28)*	1027.81	***0.25***	2.57
14	Pâte diluée du ramasse pâte	*BT(30)*	3020.13	***4.25***	128.38
15	Sortie du cuvier des cassés	*BT(32)*	5460.71	***3.60***	196.59
16	Pâte désencrée	BP(0)	97.23	***50.00***	48.62
17	Pâte désencrée diluée	BT(18)	1586.02	***3.30***	52.34
18	Sortie cuvier de la machine	BT(33)	18446.28	***3.50***	645.62
19	Méthyl violet		***12.24***	***0***	0
20	Entrée du tamis primaire	BT(34)	152885.64	0.83	1262.06
21	Acceptés du tamis primaire	BT(12)	145973.64	0.81	1183.26
22	Rejettés du tamis primaire		***6912.00***	***1.14***	***78.80***
23	Sortie du cuvier des rejets	BT(35)	10415.94	***0.89***	92.70
24	Acceptés du tamis secondaire	BT(37)	9707.77	***0.89***	86.40
25	Rejettés du tamis secondaire		***1152.00***	***0.70***	8.06
26	Vapeur (silo hors machine)		59.04	***0.00***	0.00
	Total silo hors machine	BT(22)	138463.64	0.40	549.48
27	Dilution pompe de mélange	BT(38)	116223.35	0.40	461.22
28	Trop plein vers cuvier e.b.r.	BT(39)	22240.29	0.40	88.26
29	Dilution blanchiment	BC(23)	4991.39	0.40	19.81
30	Dilution cuvier de nivellement	BC(25)	2467.43	0.40	9.79
31	Dilution au ramasse pâte	*BC(29)*	10641.24	0.40	42.23
32	Dilution cuvier des cassés	*BC(39)*	192.46	0.40	0.76
33	Dilution cuvier des rejets	BC(34)	3503.94	0.40	13.91
34	Dilution tamia secondaire	BC(36)	443.83	0.40	1.76
35	Dilution fosse bout sec	BC(13)	1527.31	***0.17***	2.60
36	Dilution fosses des presses	BC(15)	628.74	***0.17***	1.07
37	Eau vers l'usine PTM	BC(19)	5113.39	***0.17***	8.69
38	Trop plein du cuvier de surplus	BT(21)	1891.45	***0.17***	3.22
39	Sortie fosse du bout sec	BT(14)	1575.98	***3.00***	47.28
40	Sortie fosse des presses	BT(16)	672.14	***3.00***	20.16
41	Polymère		***108.00***	***0.00***	0.00
42	Entrée caisse d'arrivée	BT(10)	146081.64	***0.81***	1183.26
43	Recirculation de la caisse d'arrivée		***8496.00***	***0.81***	68.82
44	Sortie caisse d'arrivée vers formation	BC(9)	137585.64	***0.81***	1114.44
45	Eau fraîche chauffée des douches		***5820.48***	***0.00***	***0.00***
46	Eau blanche de la zone de formation	BT(8)	138404.60	0.397	549.48
47	Égout-1		***228.00***	0.10	***0.30***
48	Égout-2 (Rouleau coucheur)		166.67	***0.18***	***0.30***
	Égout de la machine (eau de procédé)		2287.26	0.24	***5.5***
49	Rognures des jets coupeurs	BP(0)	39.42	***18.00***	7.10
50	E.b. vers la fosse du rouleau coucheur	BC(6)	1424.96	***0.17***	2.42
51	Eau de fosse rouleau coucheur	BT(7)	1464.39	***0.65***	9.52
52	Feuille humide de la zone de formation	BT(4)	3082.47	***18.00***	554.85
53	Eau des presses	BP(5)	1832.60	0.27	4.90
54	Casses sécherie	BP(0)	43.40	***44.00***	19.10
55	Feuille sortant des presses	BC(2)	1206.48	***44.00***	530.85
56	Vapeur	BT(3)	628.21	***0.00***	0.00
57	Feuille sortant de la sécherie	BC(1)	578.27	***91.80***	530.85
58	Casses bout sec	BP(0)	10.40	***91.80***	9.55
59	Rouleaux rejettés		***14.00***	***91.80***	12.85
60	Papier déchiré		***15.00***	***91.80***	13.77
61	Production nette	BP(0)	529.59	***91.80***	486.17
62	Rognures de la bobineuse	BP(0)	9.27	***91.80***	8.51

Notes. Gras-italique:valeur fixée;Italique:bilan itératif;
BC:bilan sur concentration;BT:bilan sur débit total;BP:bilan particulier
Le nombre () dans la colonne 2 indique le numéro d'ordre du bilan dans les calculs

TABLEAU B.2: Cas 1, paramètres connus et utilisés.

Vitesse de la machine à la calandre (m/min)	1100
Grammage de la feuille séchée (g/m²)	48.8
Humidité de la feuille séchée (%)	8.2
Largeur de la feuille à la calandre (cm)	775
Largeur de la feuille rognée (cm)	762
Temps de casse à la sécherie (min/d)	50
Temps de casse au bout sec (min/d)	25
Rétention globale dans la machine (%)	51

TABLEAU B.3: Cas 2, paramètres connus et utilisés.

Densité de la fibre (kg/L)	1.15
Capacité calorifique de la fibre (kJ/kg-°C)	1.20
Densité de l'eau (kg/L)	1.00
Capacité calorifiaue de l'eau (kJ/kg-°C)	4.18
Enthalpie de la vapeur (kJ/kg)	2754.0
Diff. de temp. entre courants 28 et 11 (°C)	0.1
Diff. de temp. entre courants 11 et 34 (°C)	0.4
Rognures (courant 38, % de 36)	3.0
Recyc. caisse d'arrivée (courant 29, % de 23)	10.0
Déb. Cuvier de la machine (courant 6, % de 9	20.0
Déb. au silo (courant 13, % d'aliment. totale)	5.0
Retour au ramasse pâte (courant 44, % 44 + 7)	15.0
Courant 35, eau fraîche (t/d)	6000
Courant 41, retour vers PTM (t/d)	7500

TABLEAU B.4: Cas 2, séquence des calculs et résultats.

1.Courant Nº	3.Débit total (t/d)	4.Cons. (%)	5. Débit solides (t/d)	6. Temp. (ºC)
1	7500.0	***8.00***	***600.00***	***60.0***
2	13965.9	0.31	43.98	58.7
3	21465.9	***3.00***	643.98	59.1
4	6118.2	***3.00***	183.55	58.8
5	517.9	***3.50***	18.13	58.9
6	6240.4	2.80	174.73	59.0
7	29191.1	2.97	867.32	59.1
8	2011.0	0.31	6.33	58.7
9	31202.0	***2.80***	873.66	59.0
10	24961.6	2.80	698.93	59.0
11	97915.9	0.52	511.00	59.5
12	74.6			
13	4899.5	0.52	25.55	60.0
14	93091.0	0.52	485.45	***60.0***
15	144886.7	1.00	1450.03	59.7
16	161743.6	***0.91***	1471.87	59.6
17	9426.0	2.32	218.78	59.6
18	18174.7	0.31	57.23	58.7
19	27600.7	***1.00***	276.01	59.0
20	26834.0	***0.99***	265.66	59.0
21	766.7	***1.35***	10.35	59.0
22	9644.8	***1.07***	102.98	59.6
23	152098.8	0.90	1368.89	59.6
24	1787.4	0.31	5.63	58.7
25	11432.2	***0.95***	108.61	59.5
26	359.2	***1.36***	4.89	59.5
27	11073.0	***0.94***	103.72	59.5
28	136888.9	***0.90***	***1232.00***	59.6
29	15209.9	0.90	136.89	59.6
30	10600.1	0.31	33.38	58.7
31	171169.6	0.99	1690.64	59.6
32	9633.3	***0.03***	2.89	58.8
33	38973.0	***1.85***	***721.00***	59.5
34	35639.6	0.34	121.00	59.1
35	6000.0			***55.0***
36	3333.3	***18.00***	***600.00***	59.1
37	3233.3	18.00	582.00	59.1
38	100.0	18.00	18.00	59.1
39	417.9	0.03	0.13	58.8
40	41639.6	0.29	121.00	58.5
41	7502.3	0.03	2.25	58.8
42	46539.2	0.31	146.55	58.7
43	1713.2	0.03	0.51	58.8
44	5151.4	2.97	153.06	59.1

Notes.même symbolique que le tableau I

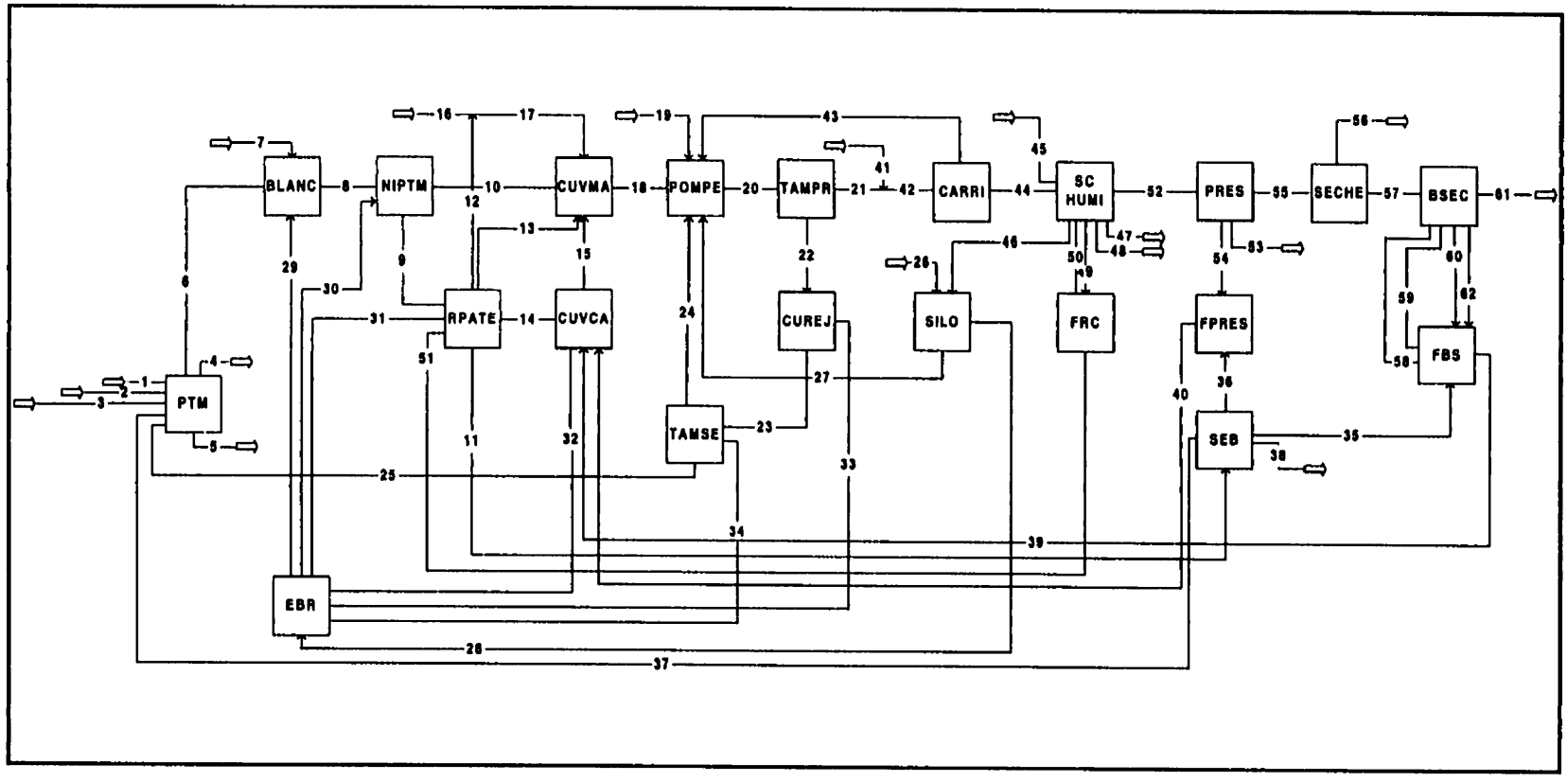

Figure B.1 : Cas 1, schéma bloc du réseau d'eaux blanches.

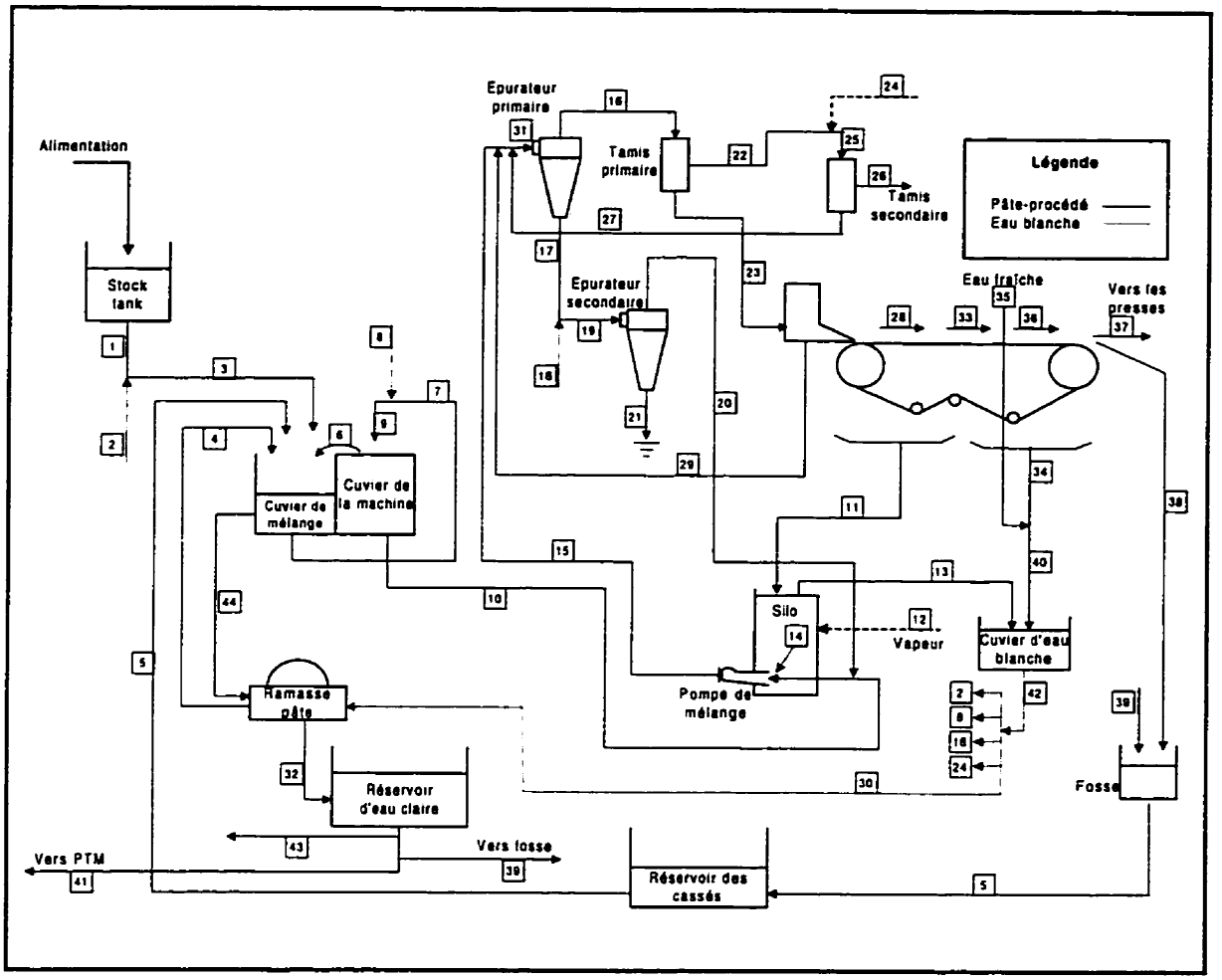

Figure B.2 : Cas 2, diagramme du circuit de cassés.

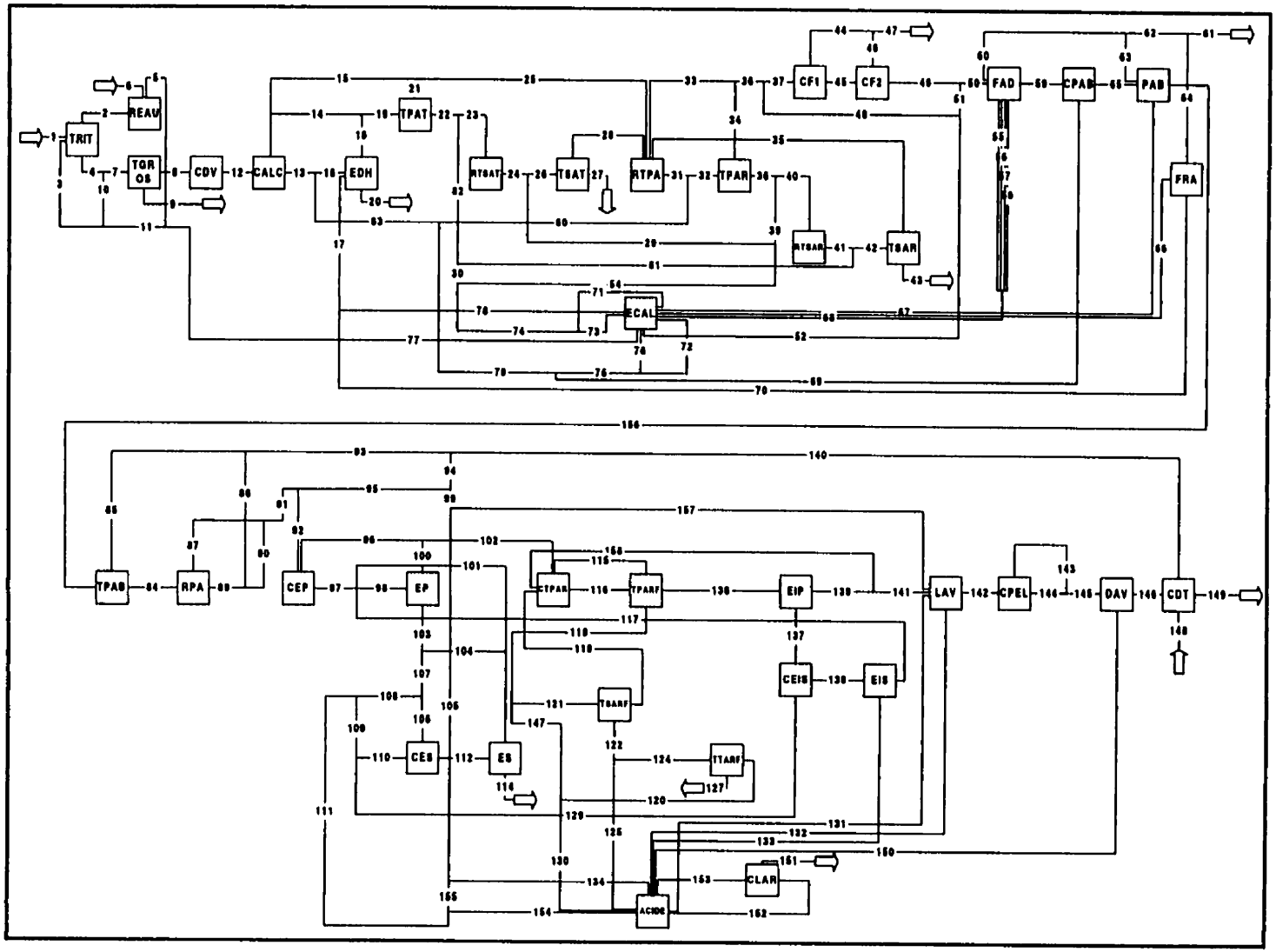

Figure B.3 : Cas 3, schéma bloc de l'atelier de désencrage.

IMAGE EVALUATION TEST TARGET (QA-3)

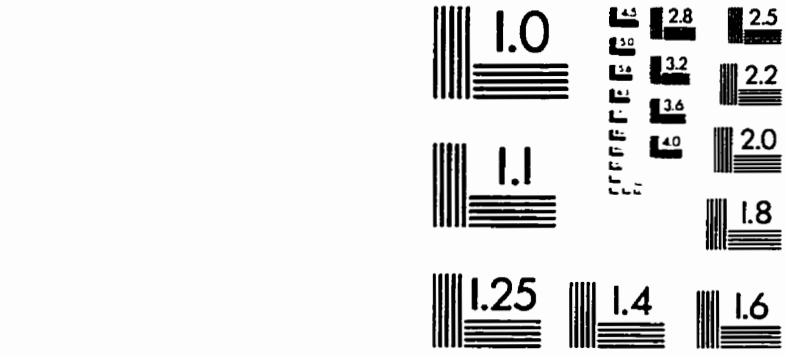

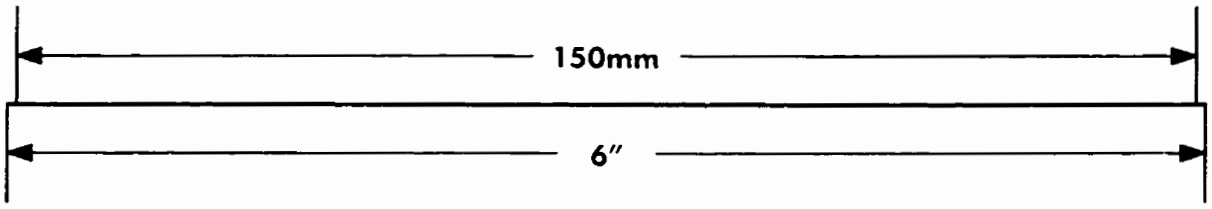

APPLIED IMAGE, Inc
1653 East Main Street
Rochester, NY 14609 USA
Phone: 716/482-0300
Fax: 716/288-5989

© 1993, Applied Image, Inc., All Rights Reserved