IEEE Access
Multidisciplinary : Rapid Review : Open Access Journal

SPECIAL SECTION ON IEEE POWER & ENERGY SOCIETY SECTION

Received 28 June 2025, accepted 10 July 2025, date of publication 15 July 2025, date of current version 28 July 2025.

Digital Object Identifier 10.1109/ACCESS.2025.3589280

THEORY

Compensation Method, Diakoptics, and MATE

JEAN MAHSEREDJIAN[1], (Life Fellow, IEEE), BORIS BRUNED[2], (Senior Member, IEEE), AND ANAS ABUSALAH[3]

[1]Department of Electrical Engineering, Polytechnique Montréal, Montreal, QC J3X 1S1, Canada
[2]RTE, Campus Transfo, 69330 Jonage, France
[3]PGSTech, Montreal, QC H2K 1C3, Canada

Corresponding author: Boris Bruned (boris.bruned@rte-france.com)

ABSTRACT This paper demonstrates how the Compensation method relates to the bordered-block-diagonal solution of power grids for the computation of power system transients. It is shown that it also relates to diakoptics and englobes other algorithms, such as the Multi Area Thevenin Equivalent (MATE) method. Implementation issues and potential inefficiencies are also discussed. The aim is to create a reference for avoiding confusion in the literature, for eliminating misconceptions and for supporting future research.

INDEX TERMS Compensation method, electromagnetic transients, parallelization.

I. INTRODUCTION

The compensation method theory is initially introduced in [1], [2], [3] and one of its applications is described in [4] for the solution of nonlinear models for the computation of electromagnetic transients (EMTs). The basic idea of this method is the computation of Thevenin equivalents that can be connected or completed with linear and nonlinear components.

The limitations that this method may encounter in general are described in [5]. It is stated in [5] that the method is not conformable to the topological proper-tree notion and therefore may have topological limitations. In other words, the Thevenin equivalent may not be realizable. The hybrid analysis method [6], [7], [8] has been shown in [9] to be more generic than the Compensation algorithm.

This paper proposes further theoretical analysis [10] on the Compensation method and its relations to other methods, such as diakoptics [11] and the Multi Area Thevenin Equivalent (MATE) concept [12], [13]. Both linear and nonlinear systems are considered. Moreover, the Modified-Augmented-Nodal Analysis (MANA) method [14] of network equations is used as the basis for deriving the Compensation method equations. This also discusses parallel implementation issues. Lastly, a practical test case derived from a distribution network illustrates the performance of the Compensation method.

The associate editor coordinating the review of this manuscript and approving it for publication was Yifan Zhou.

The objective is to create a reference to avoid confusion in literature, eliminate misconceptions and support future research.

II. THE COMPENSATION APPROACH

The basic idea of the Compensation method is illustrated in Figure 1 where a linear or nonlinear network N2 is connected to network N1 through one or more wires (n wires).

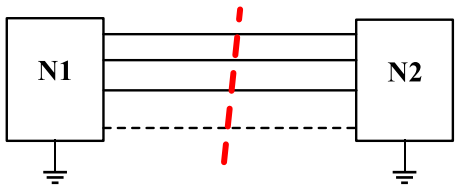

FIGURE 1. Two networks interfaced with the compensation method; the dashed lines represent cutting wires.

It is assumed that the wires are connecting to a set of nodes $\widehat{N}$ in N1. It can be written that for any time-point solution:

$$\boldsymbol{v}_{\widehat{N}}^{final} = \boldsymbol{v}_{\widehat{N}} + \boldsymbol{v}_{\widehat{N}_\phi} \tag{1}$$

where $\boldsymbol{v}_{\widehat{N}}$ is the solution vector of node voltages for N1 when it is disconnected from N2, $\boldsymbol{v}_{\widehat{N}_\phi}$ is the solution found from the contributions of currents entering N1 through $\hat{n}$ wires and $\boldsymbol{v}_{\widehat{N}}^{final}$ is the final solution through the superposition theorem. It is assumed here that N1 does not contain nonlinearities, whereas N2 may contain nonlinear components that require

© 2025 The Authors. This work is licensed under a Creative Commons Attribution 4.0 License.
For more information, see https://creativecommons.org/licenses/by/4.0/

iterations for an accurate solution. It can be shown that:

$$\boldsymbol{v}_{\widehat{N}_\phi} = \boldsymbol{Z}_\phi \boldsymbol{i}_\phi \tag{2}$$

where $\boldsymbol{Z}_\phi$ is an impedance matrix relating the currents entering the set of nodes $\widehat{N}$. The branch voltages in N2 are related by:

$$\boldsymbol{v}_\phi = \widehat{\boldsymbol{A}}_{n\phi}^T \boldsymbol{v}_{\widehat{N}}^{final} \tag{3}$$

where $\widehat{\boldsymbol{A}}_{n\phi}^T$ is the transposed nodal incidence matrix for the nodes in N2. By combining equations (1), (2) and (3):

$$\boldsymbol{v}_\phi = \widehat{\boldsymbol{v}}_{th} + \widehat{\boldsymbol{A}}_{n\phi}^T \boldsymbol{Z}_\phi \boldsymbol{i}_\phi \tag{4}$$

where $\widehat{\boldsymbol{v}}_{th}$ is the vector of Thevenin voltages found from N1. The Thevenin impedance matrix $\widehat{\boldsymbol{Z}}_{th}$ is given by:

$$\widehat{\boldsymbol{Z}}_{th} = \widehat{\boldsymbol{A}}_{n\phi}^T \boldsymbol{Z}_\phi \tag{5}$$

and consequently,

$$\boldsymbol{v}_\phi = \widehat{\boldsymbol{v}}_{th} + \widehat{\boldsymbol{Z}}_{th} \boldsymbol{i}_\phi \tag{6}$$

Finally, it is noted that the currents $\boldsymbol{i}_\phi$ and voltages $\boldsymbol{v}_\phi$ are related through a function $\boldsymbol{\Phi}$ that could be linear or nonlinear:

$$\boldsymbol{\Phi}(\boldsymbol{v}_\phi, \boldsymbol{i}_\phi) = 0 \tag{7}$$

If $\boldsymbol{\Phi}$ is nonlinear then (6) must be solved using iterations and the Newton's method.

The vector $\widehat{\boldsymbol{v}}_{th}$ is time-dependent and must be found at each time-point solution. The matrix $\widehat{\boldsymbol{Z}}_{th}$ may also have time dependency due to switching devices in N1.

III. MATE FROM THE COMPENSATION APPROACH

In Figure 1, it is possible to include further decoupling in N1. It is assumed now that there are two networks in N1 and N2 that are connected using the circuit of N3, as shown in Figure 2.

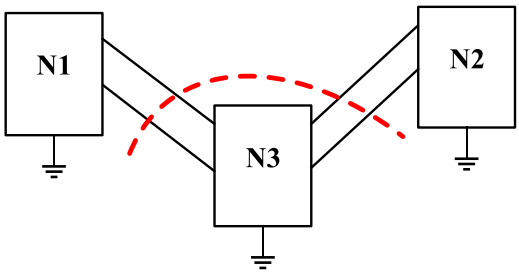

FIGURE 2. Two networks N1 and N2 connected through wires in network N3.

The MANA formulation [14] of network equations for Figure 1 is given by

$$\begin{bmatrix} \boldsymbol{A}_1 & \boldsymbol{0} & \boldsymbol{S}_{ck} \\ \boldsymbol{0} & \boldsymbol{A}_2 & \boldsymbol{S}_{cm} \\ \boldsymbol{S}_k & \boldsymbol{S}_m & \boldsymbol{S}_d \end{bmatrix} \begin{bmatrix} \boldsymbol{x}_1 \\ \boldsymbol{x}_2 \\ \boldsymbol{x}_3 \end{bmatrix} = \begin{bmatrix} \boldsymbol{b}_1 \\ \boldsymbol{b}_2 \\ \boldsymbol{b}_3 \end{bmatrix} \tag{8}$$

where $\boldsymbol{A}_1$ is the matrix of N1, $\boldsymbol{A}_2$ is the matrix of N2 and the $\boldsymbol{S}$ matrices are the connecting matrices from network N3 [12], the $\boldsymbol{x}$ vectors contain the MANA variables to compute at each time-point, and the $\boldsymbol{b}$ vectors contain known/historical values. In (8), N3 can contain longitudinal impedances, but for the following text and without lack of generality, it is assumed that the impedances in N3 are zero, meaning that N1 and N2 are interconnected through ideal wires. So (8) becomes

$$\begin{bmatrix} \boldsymbol{A}_1 & \boldsymbol{0} & \boldsymbol{S}_k \\ \boldsymbol{0} & \boldsymbol{A}_2 & \boldsymbol{S}_m \\ \boldsymbol{S}_k^T & \boldsymbol{S}_m^T & \boldsymbol{0} \end{bmatrix} \begin{bmatrix} \boldsymbol{x}_1 \\ \boldsymbol{x}_2 \\ \boldsymbol{x}_3 \end{bmatrix} = \begin{bmatrix} \boldsymbol{b}_1 \\ \boldsymbol{b}_2 \\ \boldsymbol{0} \end{bmatrix} \tag{9}$$

The compensation-based solution of (8) (or (9)) can proceed as follows at each solution time-point. First, it is necessary to solve with wires cut (removed) by using

$$\begin{bmatrix} \boldsymbol{A}_1 & \boldsymbol{0} & \boldsymbol{0} \\ \boldsymbol{0} & \boldsymbol{A}_2 & \boldsymbol{0} \\ \boldsymbol{0} & \boldsymbol{0} & \boldsymbol{1} \end{bmatrix} \begin{bmatrix} \boldsymbol{x}_1' \\ \boldsymbol{x}_2' \\ \boldsymbol{i}_3 \end{bmatrix} = \begin{bmatrix} \boldsymbol{b}_1 \\ \boldsymbol{b}_2 \\ \boldsymbol{0} \end{bmatrix} \tag{10}$$

In this way, the unknowns $\boldsymbol{x}_1'$ and $\boldsymbol{x}_2'$ are found before compensation and $\boldsymbol{x}_3 = \boldsymbol{i}_3 = 0$ for the wire currents (at this stage). From $\boldsymbol{x}_1'$ and $\boldsymbol{x}_2'$, it is possible to extract directly the Thevenin voltages $\widehat{\boldsymbol{v}}_{th1}$ and $\widehat{\boldsymbol{v}}_{th1}$, respectively. Then, using current injections [2] through $\boldsymbol{b}_1''$ and $\boldsymbol{b}_2''$ for each network, it is possible to derive the Thevenin impedances $\widehat{\boldsymbol{Z}}_{th1}$ and $\widehat{\boldsymbol{Z}}_{th2}$ as follows (the double-primed vectors signify the current injection method for finding $\widehat{\boldsymbol{Z}}_{th1}$ and $\widehat{\boldsymbol{Z}}_{th2}$):

$$\begin{aligned} \boldsymbol{A}_1 \boldsymbol{x}_1'' &= \boldsymbol{b}_1'' \\ \boldsymbol{A}_2 \boldsymbol{x}_2'' &= \boldsymbol{b}_2'' \end{aligned} \tag{11}$$

At this stage it is possible to solve for the wire currents $\boldsymbol{i}_3$ with

$$\left[\widehat{\boldsymbol{Z}}_{th1} + \widehat{\boldsymbol{Z}}_{th2}\right] \boldsymbol{i}_3 = \widehat{\boldsymbol{v}}_{th1} - \widehat{\boldsymbol{v}}_{th2} \tag{12}$$

The above relation is illustrated in Figure 3. It is assumed that the wire currents are oriented from left to right. Also, the coefficient matrix resulting in (12) is not singular.

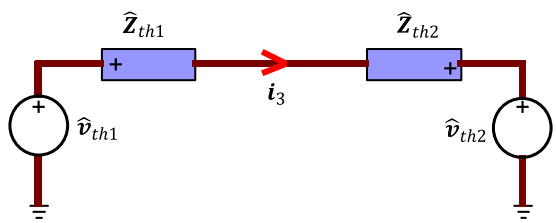

FIGURE 3. Compensation-based equivalent of network in Figure 2.

After solving for $\boldsymbol{i}_3$ in (12), it is possible to solve for the contributions ($\boldsymbol{x}_{1\phi}$ and $\boldsymbol{x}_{2\phi}$) of $\boldsymbol{i}_3$ on N1 and N2:

$$\begin{aligned} \boldsymbol{A}_1 \boldsymbol{x}_{1\phi} &= -\boldsymbol{S}_k \boldsymbol{i}_3 \\ \boldsymbol{A}_2 \boldsymbol{x}_{2\phi} &= -\boldsymbol{S}_m \boldsymbol{i}_3 \end{aligned} \tag{13}$$

Finally, superposition (compensation) is applied to find

$$\begin{aligned} \boldsymbol{x}_1 &= \boldsymbol{x}_1' + \boldsymbol{x}_{1\phi} \\ \boldsymbol{x}_2 &= \boldsymbol{x}_2' + \boldsymbol{x}_{2\phi} \end{aligned} \tag{14}$$

The above procedure must be applied at each solution time-point. Any number of networks can be used and

interconnected using wires (or impedances). Equations (11) and (13) can be solved in parallel. If there is any topological change in N1 or/and N2, it is necessary to recalculate $\widehat{\boldsymbol{Z}}_{th1}$ or/and $\widehat{\boldsymbol{Z}}_{th1}$. This is an important limitation.

The above solution steps can be explained and performed differently. Equation (9) can be rewritten as follows

$$\begin{bmatrix} \mathbf{1} & \mathbf{0} & \boldsymbol{S}_1 \\ \mathbf{0} & \mathbf{1} & \boldsymbol{S}_2 \\ \mathbf{0} & \mathbf{0} & \boldsymbol{S}_3 \end{bmatrix} \begin{bmatrix} \boldsymbol{x}_1 \\ \boldsymbol{x}_2 \\ \boldsymbol{i}_3 \end{bmatrix} = \begin{bmatrix} \widehat{\boldsymbol{b}}_1 \\ \widehat{\boldsymbol{b}}_2 \\ \widehat{\boldsymbol{b}}_3 \end{bmatrix} \tag{15}$$

with

$$\boldsymbol{S}_1 = \boldsymbol{A}_1^{-1}\boldsymbol{S}_k \tag{16}$$
$$\widehat{\boldsymbol{b}}_1 = \boldsymbol{A}_1^{-1}\boldsymbol{b}_1 \tag{17}$$
$$\boldsymbol{S}_2 = \boldsymbol{A}_2^{-1}\boldsymbol{S}_m \tag{18}$$
$$\widehat{\boldsymbol{b}}_2 = \boldsymbol{A}_2^{-1}\boldsymbol{b}_2 \tag{19}$$
$$\boldsymbol{S}_3 = -\boldsymbol{S}_k^T\boldsymbol{S}_1 - \boldsymbol{S}_m^T\boldsymbol{S}_2 \tag{20}$$
$$\widehat{\boldsymbol{b}}_3 = -\boldsymbol{S}_k^T\widehat{\boldsymbol{b}}_1 - \boldsymbol{S}_m^T\widehat{\boldsymbol{b}}_1 \tag{21}$$

From (12) and (20) it is seen that

$$\boldsymbol{S}_3 = \widehat{\boldsymbol{Z}}_{th1} + \widehat{\boldsymbol{Z}}_{th2} \tag{22}$$

From (12) and (21) it is apparent that

$$\widehat{\boldsymbol{b}}_3 = \widehat{\boldsymbol{v}}_{th1} - \widehat{\boldsymbol{v}}_{th2} \tag{23}$$

because $\widehat{\boldsymbol{b}}_1$ is actually $\boldsymbol{x}_1'$ in (10). The same applies for $\widehat{\boldsymbol{b}}_2$ and $\boldsymbol{x}_2'$. It is noted that the coefficients of $\boldsymbol{S}_m^T$ are negative (ideal switch equations) and that explains the corresponding negative sign in (23). Finally, it is clear from (13), (14) and (15) that

$$\boldsymbol{x}_1 = -\boldsymbol{A}_1^{-1}\boldsymbol{S}_k\boldsymbol{i}_3 + \boldsymbol{A}_1^{-1}\boldsymbol{b}_1 = \boldsymbol{x}_{1\phi} + \boldsymbol{x}_1' \tag{24}$$
$$\boldsymbol{x}_2 = -\boldsymbol{A}_2^{-1}\boldsymbol{S}_m\boldsymbol{i}_3 + \boldsymbol{A}_2^{-1}\boldsymbol{b}_2 = \boldsymbol{x}_{2\phi} + \boldsymbol{x}_2' \tag{25}$$

The approach derived with (15) is actually called MATE (Multi Area Thevenin Equivalent) [12], [13]. As proven above with (24) and (25), MATE is in fact the Compensation method that was already available in the literature. The Diakoptics theory is also related by using boundary branches for decoupling [11]. Compensation method enriches this approach by considering zero immittance branches (wires) for tearing.

The formulation of (8) indicates that if it is possible to find the bordered-block-diagonal matrix of a network, then it is possible to solve it in parallel even when distributed-parameter lines are not available. That solution uses the Compensation method. Any number of networks can be separated (cut) and solved. The above illustration was made for two networks N1 and N2.

However, this approach poses a performance challenge. In a typical network, the networks N1 and N2 may encounter topological changes and require recalculating $\boldsymbol{S}_3$ in (22), which can be computationally demanding, particularly if repetitive switching occurs due to power-electronics converters, for example. Moreover, all the above is assuming linear networks and becomes inapplicable for practical problems with nonlinearities. It is possible to extend the above Compensation based network tearing to include nonlinearities [8], [15].

IV. PRATICAL PARALLEL IMPLEMENTATION TECHNIQUES

One can notice that (15) is simply the symbolic solution of (9). The steps are written here for convenience:

$$\boldsymbol{S}_3\boldsymbol{i}_3 = \widehat{\boldsymbol{b}}_3 \tag{26}$$
$$\boldsymbol{x}_1 = -\boldsymbol{S}_1\boldsymbol{i}_3 + \widehat{\boldsymbol{b}}_1 \tag{27}$$
$$\boldsymbol{x}_2 = -\boldsymbol{S}_2\boldsymbol{i}_3 + \widehat{\boldsymbol{b}}_2 \tag{28}$$

The solution order is:

1. solve in parallel: equation (17) for $\widehat{\boldsymbol{b}}_1$ and (19) for $\widehat{\boldsymbol{b}}_2$
2. solve for $\widehat{\boldsymbol{b}}_3$ with (23) (the two parts of this equations can be calculated in parallel and then combined).
3. use (26) to find $\boldsymbol{i}_3$.
4. solve (27) in parallel with (28).

In reality, it is very costly to implement matrix inversions in software codes as shown in (16)-(19). Sparse LU decomposition must be used for solving (9)

$$\begin{bmatrix} \boldsymbol{L}_1 & \mathbf{0} & \mathbf{0} \\ \mathbf{0} & \boldsymbol{L}_2 & \mathbf{0} \\ \boldsymbol{L}_{31} & \boldsymbol{L}_{32} & \boldsymbol{L}_{33} \end{bmatrix} \begin{bmatrix} \boldsymbol{U}_1 & \mathbf{0} & \boldsymbol{U}_{13} \\ \mathbf{0} & \boldsymbol{U}_2 & \boldsymbol{U}_{23} \\ \mathbf{0} & \mathbf{0} & \boldsymbol{U}_{33} \end{bmatrix} \begin{bmatrix} \boldsymbol{x}_1 \\ \boldsymbol{x}_2 \\ \boldsymbol{x}_3 \end{bmatrix} = \begin{bmatrix} \boldsymbol{b}_1 \\ \boldsymbol{b}_2 \\ \boldsymbol{b}_3 \end{bmatrix} \tag{29}$$

where the coupling matrices in $\boldsymbol{L}$ and $\boldsymbol{U}$ are resulting from the interconnecting switch equations. The purpose here is to implement the solution of (29) in parallel. This can be done by realizing that

$$\begin{bmatrix} \boldsymbol{L}_1 & \mathbf{0} & \mathbf{0} \\ \mathbf{0} & \boldsymbol{L}_2 & \mathbf{0} \\ \boldsymbol{L}_{31} & \boldsymbol{L}_{32} & \boldsymbol{L}_{33} \end{bmatrix} \begin{bmatrix} \boldsymbol{y}_1 \\ \boldsymbol{y}_2 \\ \boldsymbol{y}_3 \end{bmatrix} = \begin{bmatrix} \boldsymbol{b}_1 \\ \boldsymbol{b}_2 \\ \boldsymbol{b}_3 \end{bmatrix} \tag{30}$$

The solutions of $\boldsymbol{y}_1$ and $\boldsymbol{y}_2$ are found in parallel. The solution of $\boldsymbol{y}_3$ can be found from

$$\boldsymbol{L}_{33}\boldsymbol{y}_3 = \boldsymbol{b}_3 - \boldsymbol{L}_{31}\boldsymbol{y}_1 - \boldsymbol{L}_{32}\boldsymbol{y}_2 \tag{31}$$

At this stage, the following system to be solved is:

$$\begin{bmatrix} \boldsymbol{U}_1 & \mathbf{0} & \boldsymbol{U}_{13} \\ \mathbf{0} & \boldsymbol{U}_2 & \boldsymbol{U}_{23} \\ \mathbf{0} & \mathbf{0} & \boldsymbol{U}_{33} \end{bmatrix} \begin{bmatrix} \boldsymbol{x}_1 \\ \boldsymbol{x}_2 \\ \boldsymbol{x}_3 \end{bmatrix} = \begin{bmatrix} \boldsymbol{y}_1 \\ \boldsymbol{y}_2 \\ \boldsymbol{y}_3 \end{bmatrix} \tag{32}$$

The solution of $\boldsymbol{x}_3$ is found from (32):

$$\boldsymbol{U}_{33}\boldsymbol{x}_3 = \boldsymbol{y}_3 \tag{33}$$

Then, it is possible to solve for $\boldsymbol{x}_1$ and $\boldsymbol{x}_2$ in parallel since

$$\begin{aligned} \boldsymbol{U}_1\boldsymbol{x}_1 &= \boldsymbol{y}_1 - \boldsymbol{U}_{13}\boldsymbol{x}_3 \\ \boldsymbol{U}_2\boldsymbol{x}_2 &= \boldsymbol{y}_2 - \boldsymbol{U}_{23}\boldsymbol{x}_3 \end{aligned} \tag{34}$$

This idea of parallelization outlined above is also said to be based on diakoptics [11], [16], and has been re-used in [17].

It is again emphasized that the time-consuming LU decomposition must be repeated in the presence of switches and nonlinearities. This important aspect is not considered in [11],

[16], and [17] and it will become even more inefficient with the approach proposed in [17] for finding $\boldsymbol{L}_{3k}$ and $\boldsymbol{U}_{k3}$ (in this case).

In the above theory, there are no restrictions on the number of interconnected networks. One fundamental issue is the automatic derivation of (9). Switches can be inserted manually for parallel computations, but ideally, this should be done automatically. It is possible to use tools such as [18] to find bordered-block-diagonal matrices (9), but significant further research is required in this field.

Recent works have shown industrial implementations of the Compensation method for real-time [15] and off-line [19] simulations showing good performance in nonlinear cases (power electronics and inverter-based resources). The approach of [17] is implemented in [20].

V. PRATICAL TEST CASE

This test case is a 20 kV distribution network of 600 nodes connected to a 63 kV grid. It is a linear network with power lines modeled as RL impedances. The loads are static impedances. All network data is available in [21]. In total, this test case contains 643 electrical nodes with the following 3-phase components:

- AC voltage sources with impedance: 1
- RLC branches: 1712
- Ideal switches: 3

As no natural delays are available for decoupling, this test case benefits from the Compensation method (CM) parallelization. Figure 4 depicts feeder-based decoupling on two cores (CM2) or on four cores (CM4). The test scenario is a 3 s simulation with a 50 μs time-step for a three-phase-to-ground fault of 1 mΩ located on the 20 kV feeder connection point. The 100 ms fault occurs at t = 1 s.

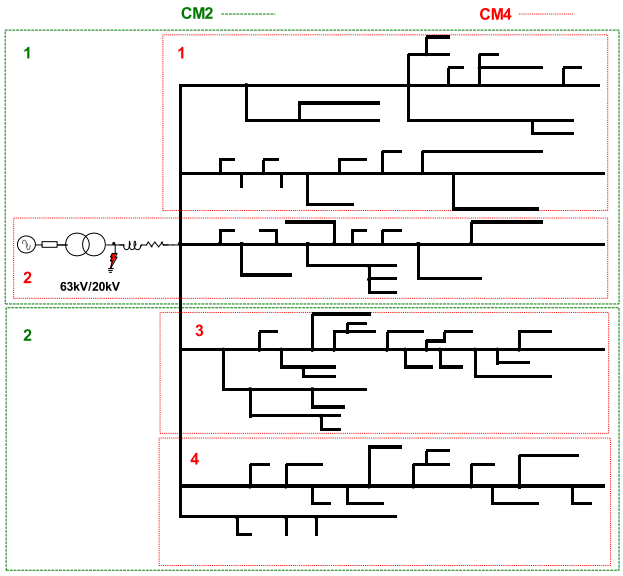

FIGURE 4. Compensation decoupling for the distribution network.

The co-simulation implementation of the Compensation method of [19] is used to run parallel simulations with the following architecture: 64 cores with 128 logical processors, AMD Ryzen Threadripper PRO 5995WX @ 2.70 GHz. Table 1 displays speed-ups from CM decoupling toward the sequential case (SEQ) with no parallelization. The last column presents the relative error, $e\%$, on the phase-a current of the fault for the entire simulation interval. The following formula is used to compute the relative error between a reference solution (SEQ) vector $\boldsymbol{f}$ and a given solution $\tilde{\boldsymbol{f}}$

$$e\% = 100 \times \left(\left\| \tilde{\boldsymbol{f}} - \boldsymbol{f} \right\|_2 \Big/ \|\boldsymbol{f}\|_2 \right) \tag{35}$$

TABLE 1. Compensation performance.

Δt=50 µs, 3 s simulation	Time (s)	Speed-up	$e\%$
SEQ (1 core)	1.74	1	0
CM2 (2 cores)	1.27	1.37	8.9e-9
CM4 (4 cores)	1.16	1.51	5.5e-9

The Compensation approach enhances performance by up to 50% in CM4 decoupling. Moreover, good accuracy is maintained, on the order of 1e-9%. In Figure 5, the CM cut in CM2 has been replaced by a stub-line (SL2). The stub-line is set to 1 mH with a small resistance (1e-5 Ω). Then, the capacitance value is computed accordingly to create a one time-step delay for parallel decoupling. It is obvious and predictable that the stub-line approach is not viable in this case and creates numerical oscillations. It is concluded that the proposed CM-based approach achieves performance gains while maintaining accuracy.

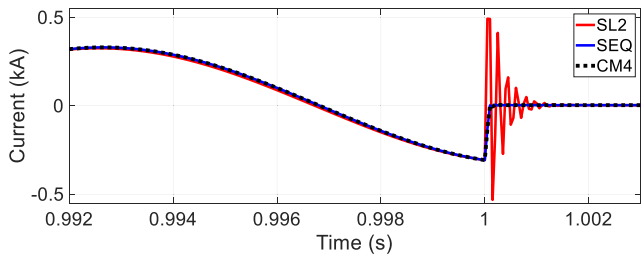

FIGURE 5. Phase-a current during fault start for different decoupling methods (SL2 and CM4) compared to reference solution SEQ.

VI. CONCLUSION

The Compensation method is a powerful approach for the formulation and solution of network equations. In this paper it has been related to MATE and diakoptics, and other methods in the literature.

Efficiency in computations can be achieved through parallelization. However, the ordered-block-diagonal formulation's efficiency depends on the borders' contents. The larger borders may require too many operations. An important issue remains the presence of changing matrices requiring repetitive refactorizations. This is emphasized in this paper.

This paper contributed theory and relations between methods that should be useful for further research in this field.

Important observations are made. The presented material does not exist in the literature and should become a useful reference when related methods are discussed and compared.

REFERENCES

[1] W. F. Tinney, "Compensation methods for network solutions by triangular factorization," in *Proc. Power Ind. Computer Appl. Conf.*, Boston, MA, USA, Jul. 1971.

[2] W. Tinney, "Compensation methods for network solutions by optimally ordered triangular factorization," *IEEE Trans. Power App. Syst.*, vol. PAS-91, no. 1, pp. 123–127, Jan. 1972.

[3] O. Alsac, B. Stott, and W. F. Tinney, "Sparsity-oriented compensation methods for modified network solutions," *IEEE Trans. Power App. Syst.*, vol. PAS-102, no. 5, pp. 1050–1060, May 1983.

[4] H. Dommel, "Nonlinear and time-varying elements in digital simulation of electromagnetic transients," *IEEE Trans. Power App. Syst.*, vol. PAS-90, no. 6, pp. 2561–2567, Nov. 1971.

[5] J. Mahseredjian, S. Lefebvre, and X. D. Do, "A new method for time-domain modelling of nonlinear circuits in large linear networks," in *Proc. Power Syst. Comput. Conf. (PSCC)*, Aug. 1993, pp. 916–922.

[6] H. So, "On the hybrid description of a linear n-port resulting from the extraction of arbitrarily specified elements," *IEEE Trans. Circuit Theory*, vol. CT-12, no. 3, pp. 381–387, Sep. 1965.

[7] P. Lin, "Formulation of hybrid matrices for linear multiports containing controlled sources," *IEEE Trans. Circuits Syst.*, vol. CS-21, no. 2, pp. 169–175, Mar. 1974.

[8] L. O. Chua and L. K. Chen, "Nonlinear diakoptics," in *Proc. IEEE Int. Symp. Circuits Syst.*, Boston, MA, USA, Jun. 1975, pp. 324–328.

[9] J. Mahseredjian, S. Lefebvre, and D. Mukhedkar, "Power converter simulation module connected to the EMTP," *IEEE Trans. Power Syst.*, vol. 6, no. 2, pp. 501–510, May 1991.

[10] A. Abusalah, "Accelerated simulation of large scale power system transients," Ph.D. dissertation, Dept. Elec. Eng., Polytech., Montreal, QC, Canada, 2019.

[11] F. M. Uriarte, "On Kron's diakoptics," *Elect. Power Syst. Res.*, vol. 88, pp. 146–150, Jul. 2012.

[12] M. A. Tomim, J. R. Martí, and L. Wang, "Parallel solution of large power system networks using the multi-area Thévenin equivalents (MATE) algorithm," *Int. J. Electr. Power Energy Syst.*, vol. 31, no. 9, pp. 497–503, Oct. 2009.

[13] F. A. Moreira and J. R. Marti, "Latency techniques for time-domain power system transients simulation," *IEEE Trans. Power Syst.*, vol. 20, no. 1, pp. 246–253, Feb. 2005.

[14] J. Mahseredjian, S. Dennetière, L. Dubé, B. Khodabakhchian, and L. Gérin-Lajoie, "On a new approach for the simulation of transients in power systems," *Electric Power Syst. Res.*, vol. 77, no. 11, pp. 1514–1520, Sep. 2007.

[15] B. Bruned, J. Mahseredjian, S. Dennetière, J. Michel, M. Schudel, and N. Bracikowski, "Compensation method for parallel and iterative real-time simulation of electromagnetic transients," *IEEE Trans. Power Del.*, vol. 38, no. 4, pp. 2302–2310, Aug. 2023.

[16] F. M. Uriarte, R. Hebner, and A. L. Gattozzi, "Accelerating the simulation of shipboard power systems," in *Proc. Grand Challenges Model. Simul.*, Hague, The Netherlands, Jun. 2011, pp. 22–29.

[17] S. Fan, H. Ding, A. Kariyawasam, and A. M. Gole, "Parallel electromagnetic transients simulation with shared memory architecture computers," *IEEE Trans. Power Del.*, vol. 33, no. 1, pp. 239–247, Feb. 2018.

[18] G. Karypis. (2011). *METIS-A Software Package for Partitioning Unstructured Graphs, Partitioning Meshes, and Computing Fill-Reducing Orderings of Sparse Matrices*. [Online]. Available: http://glaros.dtc.umn.edu/gkhome/metis/metis/overview

[19] B. Bruned, M. Ouafi, J. Mahseredjian, and S. Dennetière, "Co-simulation and compensation method for parallel simulation of electromagnetic transients," in *Proc. Int. Conf. Power Syst. Transients (IPST)*, Aug. 2025, pp. 1–7.

[20] Y. Hu, Y. Zhang, and T. Maguire, "Two-core parallel network solution for NovaCor real-time digital simulator," in *Proc. IEEE Power Energy Soc. Gen. Meeting (PESGM)*, Denver, CO, USA, Jul. 2022, pp. 1–5.

[21] J. Mahseredjian and B. Bruned. *Feeder 20KV*. Accessed: Jun. 2025. [Online]. Available: https://github.com/JeanMahseredjian/EMT_Benchmarks/tree/master/Feeder20kV

JEAN MAHSEREDJIAN (Life Fellow, IEEE) received the Ph.D. degree from Polytechnique Montréal, Montreal, QC, Canada, in 1991. From 1987 to 2004, he was with IREQ (Hydro-Quebec), Montreal, working on the research and development activities related to the simulation and analysis of electromagnetic transients. In December 2004, he joined the Faculty of Electrical Engineering, Polytechnique Montréal. He is the creator and the lead developer of the new EMTP® software. He is an IEEE Life Fellow for his contributions to the computation and modeling of power systems transients.

BORIS BRUNED (Senior Member, IEEE) received the master's degree in engineering from Centrale Nantes, France, in 2012, and the Ph.D. degree in electrical engineering from Nantes Université, in 2023. Since 2015, he has been at RTE in the development of Electromagnetic Transients simulation tool for power systems such as HYPERSIM and EMTP. His current research interests include software development, simulation techniques for electromagnetic transients, and real-time simulation. He is a Senior Member of French Society of Electricity, Electronics and Information and Communication Technologies (SEE).

ANAS ABUSALAH received the bachelor's and master's degrees in engineering from Concordia University, in 2011 and 2014, respectively, and the Ph.D. degree from Polytechnique Montréal (Université de Montréal). He is a senior power systems researcher whose research focuses on the acceleration of large-scale power systems simulations. He is currently specialized in developing the new generation of EMTP power and control solvers and enhance the overall speed of EMTP. He has more than 15 years of industrial experience in HPC, power systems simulation, and low-latency programming.