IWA World Water Congress & Exhibition
11-15 AUGUST 2024 | TORONTO, CANADA | www.worldwatercongress.org

Characterizing accumulated sludge: A key factor in understanding and modelling aerated lagoons

A. Tafti[1,5], D. Houweling[1,2], G. Rondeau[3], C. Boulanger[4], P.A. Vanrolleghem[5] and Y. Comeau[1]

[1]Department of Civil, Geological and Mining Engineering, Polytechnique Montréal, Montréal, Québec, Canada, Email: ali-reza.dehghani-tafti@polymtl.ca, yves.comeau@polymtl.ca
[2]Dynamita North America Inc., Brampton, Ontario, Canada, Email: dwight@dynamita.com
[3]*Écho-tech H_20 - Nordikeau*, Joliette, Québec, Canada, Email: grondeau@nordikeau.com
[4]Ville de Repentigny, Québec, Canada, Email: boulanger.christian@repentigny.ca
[5]*modelEAU*, Université Laval, Québec, Québec Canada, Email: peter.vanrolleghem@gci.ulaval.ca

Abstract: Sludge accumulation in aerated lagoons (ALs) primarily impacts lagoon performance by reducing the effective lagoon volume and interactions including benthic feed with the water column. Complex interactions between accumulated sludge and water were investigated using vertical sludge profiles collected from Le Gardeur ALs in Repentigny, Québec, Canada. The results revealed a gradual increase in the total solids (TS) content of the sludge with increasing depth, accompanied by a compaction effect that increased density and reduced sediment-water exchanges. The ratio of total volatile solids (TVS) to total solids (TS) increased from the upper to middle layers of the sludge, followed by a decrease toward the bottom layer in Lagoon 1. This increased TVS/TS ratio in the middle layers of the sludge suggests an enhanced potential for hydrolysis and interactions with the water column. However, the concentrations of soluble ammonia (S_{NH4}) and orthophosphates (o-PO_4) constantly increased with depth in sludge.

Keywords: Aerated lagoon; accumulated sludge; sediment-water interactions.

Introduction

Aerated lagoons (ALs) have been widely used as a sustainable and cost-competitive alternative for wastewater treatment [1]. However, a critical challenge persists, stemming from the limited development of effective modelling and design tools. This is the consequence of an insufficient understanding of the underlying mechanisms of these complex systems. In contrast to conventional biological processes, ALs enable the direct settling of biological sludges and suspended particles within their basins. Over time, the gradual accumulation of these sediments at the lagoon's base significantly impacts its performance by shortening the hydraulic residence time (HRT) and by influencing its interactions with the water column. Insights into these interactions are crucial, as they can lead to various dysfunctions, including the release of unpleasant odours, methane, soluble organic matters and the resuspension of sediment deposits [2]. Furthermore, developing a mechanistic model for ALs requires considering numerous interactions, feedback mechanisms, and exchanges at the sediment-water interface, all influenced by factors such as mixing, aeration intensity, temperature, and pH [3, 4].

Methodology

The ALs of Le Gardeur, located in Repentigny, Québec, Canada, were constructed in 1988 to serve a municipal population of 16 500. It comprises a bar screen followed by 4 ALs, each with a volume of 68 400 m^3, a liquid depth of 3.5 m and slopes of 3:1. These lagoons are interconnected in series, as depicted in Figure 1.1. Each lagoon is

equipped with sensors for continuous monitoring of several key parameters and subsurface aeration diffusers that meet the oxygen demands for biological activities. Aeration intensity is controlled to maintain a concentration of 2 mg O_2/L at the end of lagoon 1 and it increases with rising temperatures in early May and decreases in mid-October (Figure 1.2). Sludge accumulation was measured by Echo-tech H_2O-Nordikeau using sonar on a boat with a GPS system (Table 1.1). The net HRTs vary due to differences in the sludge accumulation rate in ALs, with higher accumulation rates in Lagoons 1 and 4 than in Lagoons 2 and 3 (Table 1.1). Empty bed HRTs are presented in Table 1.1. Sludge was sampled at 9 locations (upstream, middle and downstream on both sides and centre) of each lagoon. Vertical profiles at each 10 cm were obtained for various parameters by collecting samples from locations with high sludge accumulation using a modified Sludge Judge. TS and TVS in the sludge samples were analysed according Standard Methods [5]. Some sludge samples were centrifuged at 5000 rpm for 10 minutes to separate the liquid phase which was then filtered through a 1.2 µm filter for the analysis of colloidal soluble COD (CS_{COD}), ammonia (S_{NH4}) and orthophosphates (o-PO_4) using Hach methods.

Results and discussion

TS gradually increased with depth, indicating sludge compaction which resulted in increased density and reduced porosity, as shown in Figure 1.3A, C. This compaction process effectively reduces sediment-water exchanges, given the decreased porosity and diffusive fluxes [2]. Higher TS concentrations were observed in the lower layers of the sludge in Lagoon 4 (Fig. 1.3C). This further compaction is probably due to the addition of ferric sulphate for phosphorus removal upstream of Lagoon 4.

The TVS to TS ratio increased from the upper to the middle layers of the sludge and then decreased from the middle to the bottom layer in Lagoon 1 (Figure 1.3B). In Lagoon 4, the ratio only decreased with depth in the sludge (Figure 1.3D). The variation was more pronounced in April than in September. A higher TVS to TS ratio can be expected to present an enhanced potential for hydrolysis and exchanges of soluble hydrolysis products with the water column. In Lagoon 4, the lower TVS to TS ratio is expected to come with a reduced potential for hydrolysis.

The highest concentrations of CS_{COD} are observed in the middle layer of the sludge during the early spring season when some of the sludge accumulated during the winter season was starting to be increasingly hydrolysed (Fig. 1.4A). This early spring increase in CS_{COD} was accompanied by a decrease in pH in this middle layer (Fig. 1.4B), indicating fermentation in these anaerobic conditions. Conversely, at the end of the warm summer season in September when less hydrolysable sludge remained, the CS_{COD} was lower than in April and the pH was closer to neutrality (Fig. 1.4B). The progressive increase in S_{NH4} and o-PO_4 concentrations with depth in sludge indicates hydrolysis of organic material, the (slow) diffusion and release of these nutrients into the water, particularly in the case of aged sludge that had accumulated at the bottom of the lagoon. In Lagoon 1, the o-PO_4 concentration increased from 15 mg P/L in the top layer to about 200 mg P/L at the bottom as shown in Figure 1.4C. Similarly for ammonia, the concentration increased from 10 to 120 mg N/L in April and around 200 mg N/L in September (Fig. 1.4D) when biological activity (hydrolysis) is higher.

These profiles collectively provide a comprehensive perspective on quantifying benthic feedback, sediment digestibility and developing mass balances for steady-state and dynamic simulations in ALs. This underscores the importance of considering both the liquid and solid phases in aerated lagoons when developing a more accurate mechanistic model for ALs.

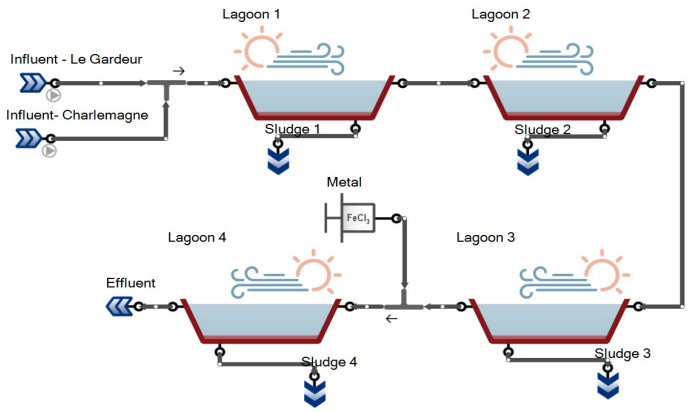

Figure 1.1 Schematic of Le Gardeur ALs

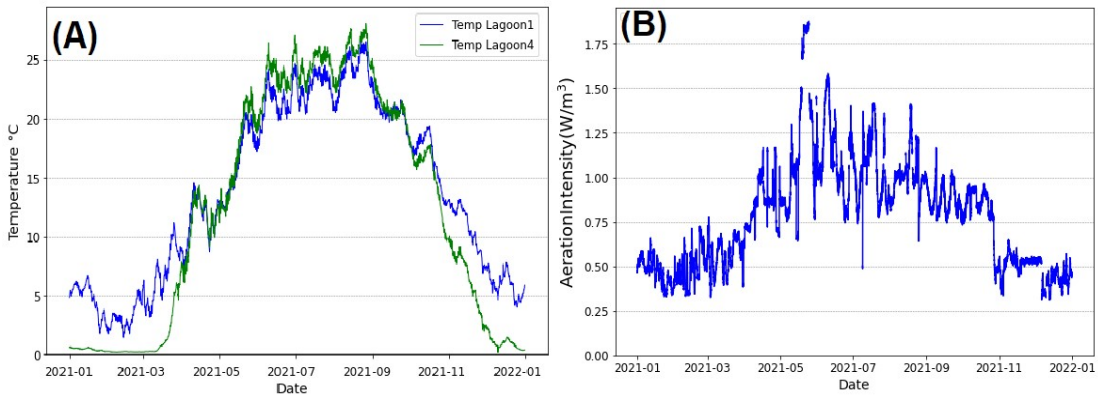

Figure 1.2 (A) Water temperature of Lagoon 1 and 4 measured by sensor and (B) total aeration intensity

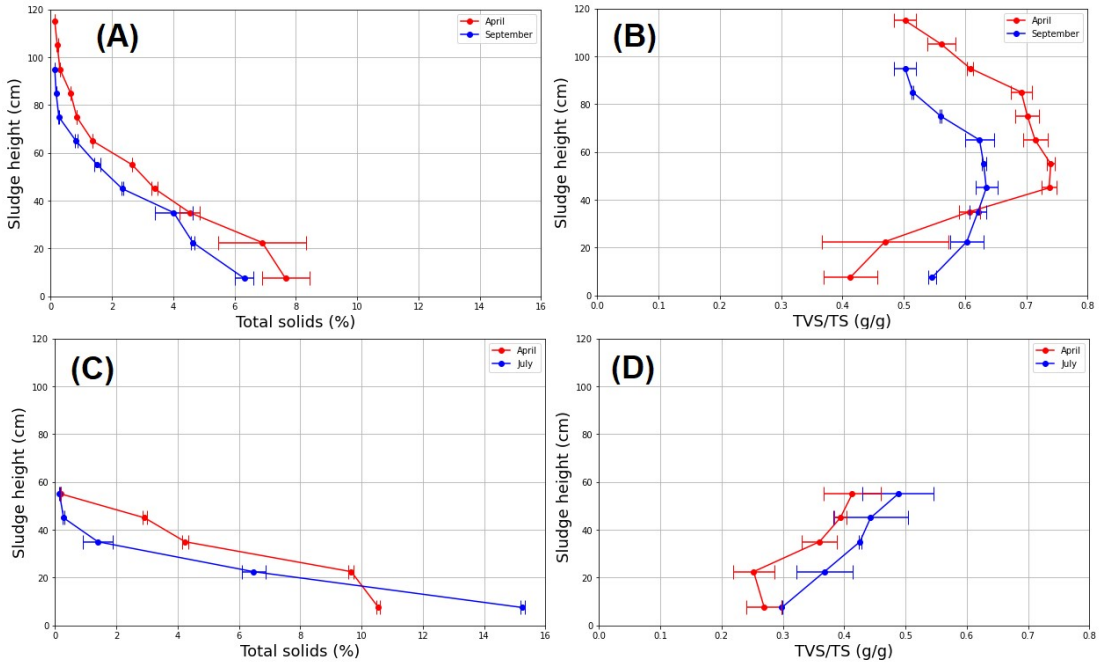

Figure 1.3 Profiles of (A)total solids Lagoon 1, (B) TVS/TS Lagoon 1, (C) total solids Lagoon 4 and (D) TVS/TS Lagoon 4

Table 1.1: Sludge volume and empty bed HRT of Le Gardeur aerated lagoon

Lagoon	%Volume of sludge in April 2023 (%)	%Volume of sludge in Sept. 2023 (%)	Empty bed Total HRT (d)
1	13.9	14.0	6.2
2	9.7	7.2	6.2
3	6.2	7.3	6.2
4	13.2	12.6	6.2

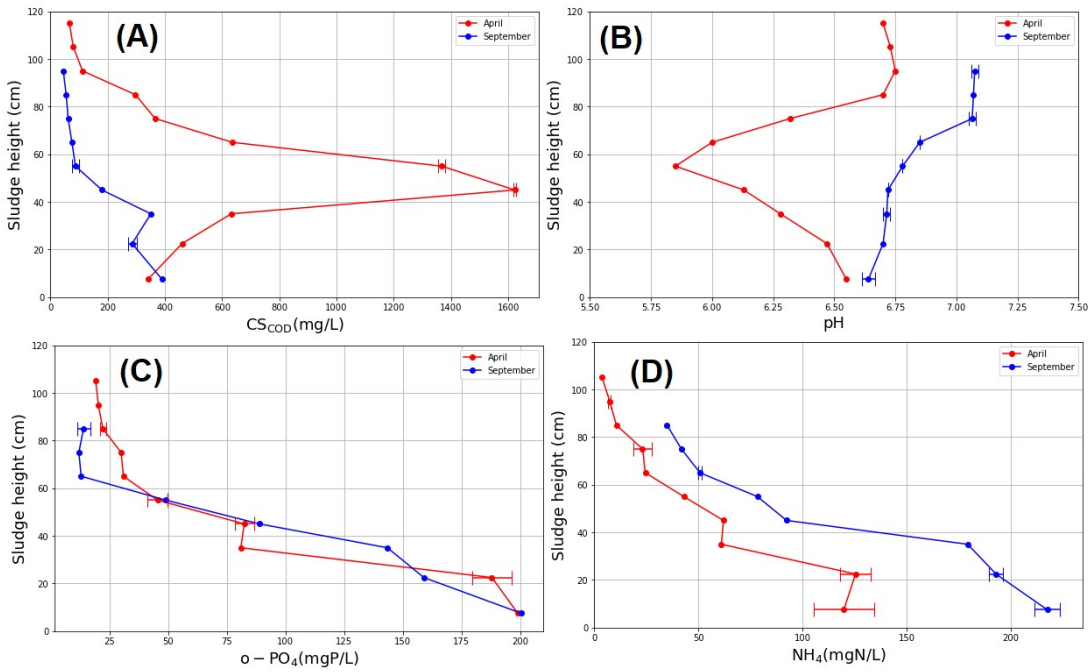

Figure 1.4 Profiles of (A) CS_{COD}, (B) pH, (C) o-PO_4 and (D) NH_4 in Lagoon 1

REFERENCES

1. Keffala, C., Harerimana, C. and Vasel, J.-L. 2013. A review of the sustainable value and disposal techniques, wastewater stabilisation ponds sludge characteristics and accumulation. *Environmental Monitoring and Assessment.* 185(1): 45-58.
2. Namèche, T., Chabir, D. and Vasel, J.-L. 1997. Characterization of sediments in aerated lagoons and waste stabilization ponds. *International Journal of Environmental Analytical Chemistry*, 68(2): 257-279.
3. Patry, B. 2020 *Monitoring, Understanding and Modelling of Biofilm-enhanced Aerated Lagoons,* Ph.D. thesis. Université Laval, Québec, QC, Canada.
4. Houweling, D., Kharoune, L, Escalas, A., Comeau, Y. 2008. Dynamic modelling of nitrification in an aerated facultative lagoon. *Water Research*. 42(1-2): 424-432.
5. APHA, AWWA and WEF. 2017. *Standard Methods for the Examination of Water and Wastewater.* 23rd ed. American Public Health Association, American Water Works Association & Water Environment Federation. Washington, D.C.