Check for updates

Received: 27 May 2024 | Accepted: 27 July 2024

DOI: 10.1049/wss2.12089

IET Wireless Sensor Systems

The Institution of Engineering and Technology WILEY

REVIEW

High-power radio frequency wireless energy transfer system: Comprehensive survey on design challenges

Javad Soleimani | **Gunes Karabulut Kurt**

Department of Electrical Engineering, Poly-Grames Research Center, Polytechnique Montréal, Montréal, Québec, Canada

Correspondence

Javad Soleimani and Gunes Karabulut Kurt.
Email: javad.soleimani@polymtl.ca and gunes.kurt@polymtl.ca

Abstract

Feeding electrical components without having a physical contact was always a goal in electrical engineering. Nowadays, Wireless Power Transfer (WPT) is becoming the main way to provide energy for wireless sensors. WPT can be categorised into two primary techniques: radiative and non-radiative methods. The authors uniquely delve into the utilisation of radiative methods, precisely the Radio Frequency (RF)-WPT method. The authors focus on the factors and considerations for designing this kind of systems highlighting the specific nuances and challenges associated with high power wireless energy transfer systems and will try to define an efficient design method. A comprehensive survey is offered encompassing the entire system. It explores both transmitter and receiver systems, dissecting their subsystems and elements and challenges related to high power application one by one, while also elucidating the essential principles and integration factors.

KEYWORDS

energy conservation, energy harvesting, radiofrequency interference, radiofrequency measurement, wireless sensor networks

1 | INTRODUCTION

1.1 | Motivation and problem description

Removing the physical contact between power source and electrical components by using approaches, such as autonomous feeding and wireless power transfer was always a problem [1–4]. For this purpose, the solar photovoltaic (PV) solution beside some other renewable energy harvesting methods grew, but wireless energy transfer cause remained unsolved due to the inability of those solutions in dark remote environments which have no access to solar beams [1–8]. Also, wireless chargers individually and along with solar PV cells are developed and have been used in several applications, such as aerospace, military and automotive industries or even in smart phones, laptops etc [2, 5, 9–12]. Wireless chargers which use WPT techniques is emerging and rapidly been developing nowadays and still needs more investigations [9–14]. WPT can be categorised into two primary techniques: Radiative and Non-Radiative methods. Radiative WPT techniques encompass four distinct categories: microwave, ultrasonic, optical, and radio frequency WPT. Non-Radiative WPT techniques, on the other hand, are classified into two main categories: inductive (IPT) and capacitive (CPT) methods [1, 2, 5, 9–14]. For high power wireless energy transfer, so far, non-radiative methods are used while those methods are so susceptible to the distance. It means even a few centimetres more distance between the primary and secondary parts drops the efficiency significantly while radiative methods could be used for higher distances and makes the WPT system more effective and practical. Also, it is important to note that the RF-WPT technique compared with all other radiative methods is more reliable and effective due to the lowest susceptibility to the alignment factor.

In total, it could be said that among all of the above techniques, using radio frequency waves which are a part of signals within the frequency range of 3 kHz up to above 3 GHz is a popular solution due to earlier successful use of electromagnetic waves for communication even for global and long distance. These signals are intended to serve as a carrier of transmitting energy in the form of electromagnetic radiation [1–5, 9–17].

RF Energy Harvesting (RFEH) is a vital and emerging technology due to its advantages over well-known methods, such as optical, mechanical, and thermal harvesting. RFEH is

This is an open access article under the terms of the Creative Commons Attribution-NonCommercial-NoDerivs License, which permits use and distribution in any medium, provided the original work is properly cited, the use is non-commercial and no modifications or adaptations are made.

© 2024 The Author(s). *IET Wireless Sensor Systems* published by John Wiley & Sons Ltd on behalf of The Institution of Engineering and Technology.

favoured in certain applications for its notable features, including reliability, predictability, controllability, and the capacity to power multiple nodes simultaneously [1–6, 9–19]. RFEH reliability makes it a dependable way to remotely power electronic devices and sensors in non-terrestrial environments where solar energy is not available [1–5, 10, 15–22].

The process of harnessing RF energy involves protecting it from the radio environment and utilising it in electronic devices. To capture RF energy emitted by the radio environment, specialised antennas with either ultra-wideband or narrow-band characteristics are necessary [1–5, 10, 15–22].

This technique can differentiate between ambient and intended RF energy. Intended RF involves a transmitter emitting RF signals directly to a specific area so called RF-WPT system, while ambient RFEH systems do not have transfer side [1–6, 10, 15–28]. Figure 1 shows the block diagram of a WPH system that consists of both parts. In this study, each block will be examined in detail.

The feasibility of a RF-WPT system depends on several system components, including transmit and receiving antennas, power management units, impedance matching networks, and rectifying circuits. Developing a RFEH system involves making critical trade-offs to optimise it for specific applications. This optimisation is essential for efficient energy conversion and device longevity. The key factors impacting optimisation are the RF signal frequency and its intensity, the design of WPT and RFEH systems' components such as antennas and circuits, and consideration of ambient temperature [1–8, 10, 13, 15–23, 25–34].

For some potential high-power applications, such as High Power level Sensors, wireless Electric Vehicle (EV) charging, military and aerospace applications, RF-WPT systems encounter a multitude of limitations and challenges. These hurdles encompass various aspects, primarily centred around Electromagnetic Interference and Compatibility (EMI/EMC).

These EMI/EMC constraints encompass conducted and radiated emissions, immunity, and safety considerations. Furthermore, when dealing with high-power WPT, a complex set of trade-offs must be navigated. One crucial trade-off pertains the trade-off between high frequency electromagnetic interference and the high switching frequency in the used transistors at transmission and receiver circuits. Simultaneously, there is a trade-off between frequency and switching/magnetic losses, while also managing the heat generated by these kinds of losses at higher power levels.

1.2 | Significance and contribution of the present survey

Table 1 has categorised the references based on their contributions. This study uniquely delves into the utilisation of radiative methods, precisely the RF-WPT method, for high-power applications and will try to optimise the efficiency of the system in total.

Notably, as far as the authors are aware, prior research in the domain of high-power WPT has predominantly focused on non-radiative techniques, and a lack of comprehensive research on RF-WPT/RFEH technique for high-power application is felt due to the better performance and efficiency of RF-WPT systems in comparison with non-radiative and other radiative methods.

This research endeavour seeks to explore the constraints, drawbacks, and challenges associated with the deployment of

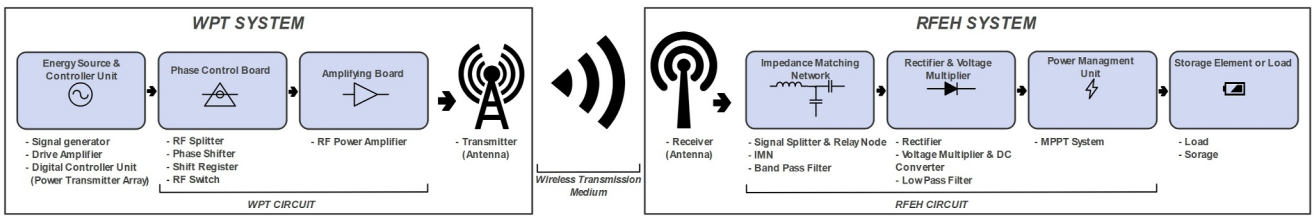

FIGURE 1 RF wireless power transfer system integrated with RF energy harvesting system.

TABLE 1 Literature survey overview.

Topics	WPT literature	WPH literature
Survey/Principals	[2, 9–14, 26, 27, 35–38]	[1–3, 5, 15–17, 23]
Focused on systems' component	[10, 36, 37, 39–41]	[3–6, 16, 17, 23, 42]
Circuit illustration or optimisation	[40, 41]	[1, 15, 16, 18, 19, 21, 32, 42]
Antenna design/optimisation	[2, 25, 27, 28, 33, 34, 38–41, 43–46]	[7, 8, 20, 28, 29, 32, 42, 47]
System's efficiency improvement	[25, 27, 48–50]	[4, 17, 19, 22, 30, 48]
High power topics	[13, 25, 35, 49–58]	[53]
Limitation and constraints topics	[26, 28, 35, 38, 46, 49, 50, 58, 59]	[5, 28]
Power management and control topics	[2, 60–62]	[4, 18, 19, 60, 63]
Focused on load variety	[53]	[53]

20436394, 0, Downloaded from https://ietresearch.onlinelibrary.wiley.com/doi/10.1049/wss2.12089 by Ecole Polytech De Montreal, Wiley Online Library on [03/09/2024]. See the Terms and Conditions (https://onlinelibrary.wiley.com/terms-and-conditions) on Wiley Online Library for rules of use; OA articles are governed by the applicable Creative Commons License

RF-WPT techniques in high-power scenarios. To fulfil this objective, we will systematically examine the overarching impediments that these systems face, while also delving into the specific limitations imposed by the electronic components employed within the circuits.

Also, unlike all existing surveys on RFEH systems that predominantly focus on the receiving side and RFEH systems, this research offers a comprehensive survey encompassing the entire system. It explores both transmitter and receiver systems, dissecting their subsystems, elements and challenges related to high power application one by one, while also elucidating the essential principles and integration factors.

In this paper, we will also define the initial objective for WPT design and optimisation and a design flowchart will be introduced to help the future designers as well.

Also, based on the previous works, converters in those systems due to their high switching loss and dramatically reducing the efficiency of the low voltage RFEH circuits are not popular. This makes the controllability of the system decrease. But in high power applications, notably while the load is not resistive or for having a controllable system, using inverters and converters have more advantages and justifications. So, this paper offers a comprehensive investigation on these kinds of systems.

This study is important for high-power applications for these reasons:

When a power management unit with maximum power point tracking or constant power load is used, incorporating converters can be beneficial. Although converters may introduce some loss, they can be justified if they improve the overall system efficiency. This is especially true when controllability is needed.

1.3 | Paper organisation

The paper is organised as follows: Section 2 provides a review of radio frequency energy transfer principals. Section 3 presents the high power wireless energy transfer constraints in two classes: safety and regulatory limitations and operational and implementation challenges. Section 4 will focus on the circuit architecture and its components' limitations and since the highest challenges in the system would be the transfer side (due to the medium loss), it will delves into the transfer circuit components. Section 5 will focus on the design methodology, optimisation objective and its constraints. Finally, Sections 6 and 7 respectively presents the open issues for the future works in this domain and the survey conclusion.

2 | RADIO FREQUENCY ENERGY TRANSFER PRINCIPALS

2.1 | Carrier frequency

An RF energy harvesting system requires an RF signal source within the 3 kHz to 300 GHz frequency range. Choosing a channel for dedicated WPT systems is challenging because the frequency band for the transmitted RF energy, whether terrestrial or non-terrestrial, must comply with regulations and obtain necessary licences since it is crucial to ensure that the designed WPT system does not interfere with existing radio signals and does not impact on electronic devices' operation. Governments and regulatory authorities allocate specific frequency bands and various restrictions on the output powers of transmitters for each channel for various uses and services. In a non-terrestrial environment, these regulations are primarily focused on communication frequency bands, but they remain essential to consider for space missions. Some common frequency bands and their ranges are listed in Table 2 [1–4, 9, 11, 15–17, 20, 23, 24, 33–35, 39–41, 43–48].

Also, the different frequency bands exhibit distinct propagation characteristics, since it may experience varying levels of interference from natural sources (e.g. atmospheric noise) and man-made sources (e.g. other communication systems, electronic devices) [1–5, 15–17, 26].

The choice of frequency affects the effective range of a communication system. Lower frequencies can propagate over longer distances. Different frequencies experience multipath propagation differently. Multipath occurs when signals reflect and scatter off objects, resulting in multiple paths for the signal to reach the receiver. High-frequency signals are more susceptible to multipath interference, which can degrade the signal' quality. In addition, different modulation and coding schemes may be more or less efficient at different frequencies, affecting the overall system capacity. The selection of frequency can impact the design and performance of equipment and system components such as antennas as well [2–5, 16, 17, 26, 32].

In a hybrid non-terrestrial RFEH system, where energy and data transfer are required, a higher-frequency waves offer larger bandwidths, which allow for higher data rates (can transport more energy per unit time, given by the equation

TABLE 2 Frequency bands and ranges [1].

Frequency band	Frequency range (MHz)
VHF	30–300
FM	87.5–108
UHF	300–3000
TV	470–862
GSM900 UL	890–915
GSM900 DL	935–960
GSM1800 UL	1710–1785
GSM1800 DL	1805–1880
UMTS UL	1920–1980
UMTS DL	2110–2170
LTE UL	791–821, 880–915, 1710–1785, 1920–1980, 2500–2570
LTE DL	832–862, 925–960, 1805–1880, 2110–2170, 2620–2690
Wi-Fi	2400–2483.5
ISM	433, 915, 2450, 5800

Abbreviation: DL, Downlink; UL, Uplink.

20436394, 0, Downloaded from https://ietresearch.onlinelibrary.wiley.com/doi/10.1049/wss2.12089 by Ecole Polytech De Montreal, Wiley Online Library on [03/09/2024]. See the Terms and Conditions (https://onlinelibrary.wiley.com/terms-and-conditions) on Wiley Online Library for rules of use; OA articles are governed by the applicable Creative Commons License

E = hν, where E is the energy and h is the Planck's constant) [27, 32, 59]. Also, higher-frequency waves tend to experience greater attenuation as they propagate through a medium. Attenuation refers to the reduction in signal strength or power. This can affect how waves interact with materials and obstacles in the medium and consequently are more easily absorbed by medium elements and particles which can reduce their efficiency in reaching their intended destination.

However, low frequency signals penetrate deeper through matter compared to their counterparts. For instance, the transmitting frequencies should not exceed a few megahertz in case the target application of RF power harvesting is an implantable device [1–3, 5, 9, 10, 14, 19, 23, 27, 30, 37, 52, 59, 61].

So, the frequency channel of a WPT system, designed for terrestrial or non-terrestrial environment should be chosen based on the operating distance or range between the energy transmitter and receiver.

2.2 | Medium, propagation mode and path loss

Determining the free space path loss, which defines power dissipation in space, requires knowledge of the transmitting wave frequency, gain, and distance between the transmitting and receiving antennas.

The efficiency of WPT systems is significantly influenced by the medium through which they operate and the associated propagation and path loss mode. Different mediums as well as different environment exhibit varying levels of signal attenuation, with factors such as conductivity, permittivity, and permeability impacting the efficiency of power transfer. Accurate path loss models are essential to estimate signal attenuation over distance, considering medium-specific characteristics. These models are particularly critical for choosing the appropriate frequency band and designing strategies to optimise efficiency. Moreover, propagation models provide a cost-effective method for optimising deployments without the need for physical site inspections and measurements [1–3, 5, 9, 10, 14, 19, 23, 27, 30, 37, 52, 59, 61].

As an example of a non-terrestrial environment compared to the terrestrial, the differences between RF propagation models on Earth, in free space, and on Mars arise from variations in atmospheric conditions, terrain, and electromagnetic properties. On Earth, models consider the complex and dynamic atmosphere, terrain, and atmospheric interference. Free space models assume an idealised scenario with no obstacles or interference. Each environment necessitates specific RF propagation models for accurate communication system design and performance predictions [1, 20, 64, 65].

To estimate RF energy harvestability at a specific distance from the transmitter, different methods are employed based on the energy source. When calculating path loss levels for RF energy harvesting at lower frequencies, various factors such as multipath, ionospheric reflection, tropospheric reflection, and sky-wave interference are not considered. This estimation typically uses the field strength (E) at distance d, as indicated in refs. [4, 23, 66].

The total RF power harvested can be assessed by considering both the network model type and the selected RF propagation model. In RF propagation, various models are used to describe how radio signals travel and interact with their environment. The most common type of RF propagation model is the deterministic free-space model [1, 3, 4, 23].

2.2.1 | Deterministic free-space model

The quantity of RF energy available for harvesting depends on various factors, including the transmitted power from the source, the distance between the source and the harvester, and the wavelength of the RF signal. Deterministic models, which are more precise and deterministic, characterise electromagnetic radiation propagation by considering specific parameters and environmental details, such as obstacle geometry and material properties. These models are ideal for scenarios requiring a high degree of accuracy and precise environmental characterisation [1, 3, 4, 23].

The Free-Space model, also known as the Free-Space Path Loss (FSPL) model, is a simplified deterministic model that assumes ideal conditions with no obstacles or interference. It is based on the inverse square law and calculates the loss of signal strength as the distance between the transmitter and receiver increases. This model is useful for understanding the fundamental relationship between signal strength and distance in the absence of obstacles. The free space model is a simplistic model assuming that there is only a single path between the transmitting and receiving antennas while this is not always the case. The transmitted power of an RF signal in free space can be evaluated based on the famous Friis equation [1, 3, 4, 17, 23, 24, 29–31, 39, 59]:

$$P_R = \frac{P_T G_T G_R \lambda^2}{(4\pi d)^2 L}, \tag{1}$$

where P_R, P_T, L, G_T, G_R, λ, and d, are the received power at the harvester, the transmit power from the source, the path loss factor, the gain of the transmitting antenna, the gain of the receiving antenna, the wavelength of the RF signal, and the distance between the transmit antenna and the receiver antenna at harvester, respectively.

It is worth to note that because of the different environmental situation and surface atmospheric parameters and consequently different propagation model and path loss models, different antenna gains, or different radiation parameters and brightness temperature parameters are required to models the medium efficiency and gained RF waves by the receiver.

2.3 | Wireless power harvesting evaluation metrics

Evaluating the performance of a WPH system involves considering several parameters, including sensitivity, efficiency, output power, and operational distance. These are standard criteria for comparative analysis. However, trade-offs exist

20436394, 0, Downloaded from https://ietresearch.onlinelibrary.wiley.com/doi/10.1049/wss2.12089 by Ecole Polytech De Montreal, Wiley Online Library on [03/09/2024]. See the Terms and Conditions (https://onlinelibrary.wiley.com/terms-and-conditions) on Wiley Online Library for rules of use; OA articles are governed by the applicable Creative Commons License

between certain parameters, such as operational distance and overall efficiency. Additionally, factors, such as cost, manufacturing process maturity, and bulk manufacturing availability are also essential considerations in designing an appropriate RF energy harvesting system [3, 15–17, 60, 61].

Despite having some other important factors for a WPT system, we aim to focus on the operation range and efficiency. The other important evaluation factors are: sensitivity (which refers to the measurement of the minimum power needed to activate the system operation), the Q factor (which is generally defined as a dimensionless value that characterises the strength of resonance and the resonance bandwidth), passive peak voltage (which can be produced using bridge rectifiers, diodes, or ideal diode rectifiers) and the dropout voltage regulator (which comprises a combination of a linear voltage regulator, a switching voltage regulator, and control logic and when it increases, power loss due to resistive division becomes more significant).

2.3.1 | Operation range

The operational distance in wireless power harvesting is closely tied to path loss and operating frequency. To minimise signal attenuation, especially for implantable devices, it is advisable to use frequencies below the megahertz range; however, to improve the efficiency by signal intensity the situation is apposite.

2.3.2 | RF-DC Power Conversion Efficiency

The efficiency of a power conversion circuit is determined by the ratio between the RF power applied and the resulting DC power output. In most cases, this RF-DC Power Conversion Efficiency (PCE) considers the efficiency of various components such as the rectifier, voltage multiplier, and storage elements. Factors affecting PCE include parasitic effects, circuit leakage, design configurations, and the non-linear thresholds of electrical components. The formula for calculating PCE is as Equation (2); [3, 15–17, 60, 61]:

$$\eta_{PCE} = \frac{P_{load}}{P_{retrieved}}, \tag{2}$$

where P_{load} represents the power supplied to the load, while $P_{retrieved}$ is the power harvested by the antenna. Efficiency is a crucial factor in the performance of an RF energy harvesting (RF-EH) system. Achieving a near-100% efficiency is essential, as it means that all the received RF energy is efficiently converted into direct current energy. To enhance efficiency, the design of the receiving antenna should focus on its efficiency and gain. Additionally, impedance matching is vital for maximising power transfer, and the rectifier circuit's power efficiency is a key component. These factors collectively impact the rate at which energy can be captured by the system. It is important to note that the expression does not account for transmission loss in space. Therefore, optimising these factors is critical for effective energy harvesting.

3 | HIGH POWER WIRELESS ENERGY TRANSFER CONSTRAINTS

Several constraints affect RF-WPT systems, such as the distance between the transmitter and receiver, frequency level and its impact on system efficiency, transmitter and receiver antenna gains, path loss characteristics of the medium, environmental and weather conditions, obstacles between the antennas, channel fading, signal interference, and beamforming. Some of these factors are addressed in the Friis equation. In this context, we aim to focus on the challenges specific to high-power RF-WPT systems.

When transferring power "freely" over the air, it is crucial to ensure safe operation. Moreover, coexistence with other systems should be guaranteed and follow regulations. This section will focus on the constraints and drawbacks that may affect high power energy transfer by radiative method, especially the RF method. For this purpose, we have gathered all the constraints from different sources and classified them into two major constraints: System and Components limitations. The system's constraints is divided into two categories: safety and regulatory constraints and operational and technical constraints.

3.1 | Safety and the regulatory context

The currents in the WPT coils or antennas produce significant magnetic fields (H-field), electric fields (E-field), and electromagnetic fields (EMF) in the environment that can induce adverse health effects in the human body.

3D electromagnetic field simulation results to quantify the electromagnetic emission in high power WPT indicate that electromagnetic safety will become a critical challenge with the power increasing to 150 kW and higher [13, 25, 35, 49–51, 58, 59].

Potential solutions, including the latest passive and active shielding technologies, are also reviewed, and compared with technical features summarised and classified according to power levels.

Therefore, ensuring that WPT systems remain within the safety limits for human exposure is very important. Some of the existing international standards for safety from EMF exposure are as follows [1, 13, 16, 25, 26, 35, 49–51, 58, 59]:

- International Commission on Non-Ionising Radiation Protection (ICNIRP) Guidelines for Limiting Exposure to Time-varying E-field, H-field, and EMF (up to 300 GHz) [140].
- IEEE Standard for Safety Levels with Respect to Human Exposure to Radio Frequency EMF (3 kHz to 300 GHz) [141].

Both organisations set standards on safe magnetic and electric field levels for human exposure as a function of

20436394, 0, Downloaded from https://ietresearch.onlinelibrary.wiley.com/doi/10.1049/wss2.12089 by Ecole Polytech De Montreal, Wiley Online Library on [03/09/2024]. See the Terms and Conditions (https://onlinelibrary.wiley.com/terms-and-conditions) on Wiley Online Library for rules of use; OA articles are governed by the applicable Creative Commons License

frequency. Related challenges in terms of misalignment and FOD, which interact with electromagnetic safety risk closely are reviewed and discussed as well.

3.1.1 | Exposure to electric fields

The human body can be notably affected by electric fields. As the operating frequency increases, the maximum electric levels decrease.

Field strength (E) at the distance (d) can be obtained by the following:

$$E = Z_i \frac{I_0 h_e}{\lambda d} A, \tag{3}$$

where h_e is the effective height of an antenna with base current I_0 and A is the attenuation factor (dimensionless) and Z_i is the intrinsic impedance of free space (vacuum) which is approximately 377 Ω. An alternative expression for the electric field density at a distance d is given by Equation (4) when units of mV/m, kW and km are used:

$$E = \frac{FM\sqrt{P_t}}{d} A. \tag{4}$$

The term "Figure of Merit" (FM) is the efficiency or effectiveness of the harvesting system, while P_t represents the transmitted power [4, 13, 15–17, 19, 23, 51, 66].

In the frequency range 0.1–1.34 MHz, the Maximum Permissible Exposure (MPE) for a Root Mean Square (RMS) E-field is 614 V/m, as per IEEE standard section C95.1 [55]. Since for the power transfer, strong electric fields are required (for example, in ref. [59] it has been noted that the electric field strength required between the Conductive Power (CP) plates of a 2 kW system can reach 180 kV/m), and it is considerably above the allowed 614 V/m in the IEEE standard, safety environments have to be considered around such systems, (1 m for 2 kW system). Concentrating the field by using a six-plate structure, reduces the spread of electric fields and could limit reduce the safety distance. An additional issue involves the necessity for plate voltages to produce powerful electric fields, often reaching several kilovolts through compensation networks. So, an insulating coating will be applied to the plates [59]. In the frequency range of 1.34–30 MHz, the MPE for an RMS E-field is 823.8/f V/m [4, 25, 35, 46, 51, 54, 58, 59].

3.1.2 | Exposure to magnetic fields

Like the E-Field, by increasing the operating frequency, the maximum magnetic levels decrease as well. EMFs in the 1 MHz to 10 GHz range can penetrate tissues, leading to heat generation due to energy absorption. EMFs above 10 GHz are largely blocked by the skin, potentially causing harm such as eye cataracts or skin burns when the field density exceeds 1000 W/m^2. To prevent adverse health effects, the International Commission on Non-Ionising Radiation Protection (ICNIRP) has established global guidelines for EMF exposure limits, recognised by the World Health Organisation (WHO). Therefore, it is important to carefully consider RF emission power and frequency to ensure safety and avoid unintended damage [58, 59].

The permissible exposure levels for magnetic fields in an unrestricted environment are outlined in IEEE standard, section C95.1 [55]. For inductively coupled systems, it is essential to avoid generating a magnetic field surpassing 163 A/m within the frequency range of 3.35 kHz to 5 MHz. Within the range of 1.34–30 MHz, the magnetic field strength should not exceed (16.3/fM) A/m with fM the frequency in MHz. In the frequency range of 1.34–30 MHz, an RMS H-field is 158.3/f 1.668 A/m [51].

3.1.3 | Exposure to electromagnetic fields

Various organisations and governmental bodies have established criteria for exposure to electromagnetic radiation. These standards, grounded in scientific research, can be translated into legal regulations by individual countries. In the United States, the Federal Communications Commission (FCC) has adopted recommendations from expert organisations, specifically the National Council on Radiation Protection and Measurements (NCRP) and the Institute of Electrical and Electronics Engineers (IEEE). In many European countries, adherence to guidelines from the International Commission on Non-Ionising Radiation Protection (ICNIRP) is common. The safety limits defined by the ICNIRP closely align with those set by the NCRP and IEEE, although there are some exceptions [4, 35, 46, 48, 51, 59].

The guidelines distinguish between individuals exposed to electromagnetic fields based on their status, either as occupationally exposed individuals or members of the general public [59]. For the general public, more stringent exposure limits are maintained. The acceptable exposure limits for the general public within the ISM bands can be referenced in ref. [55].

The scientific literature identifies two primary biological effects [56, 59]:

- Thermal effects involve the heating of biological tissue and an overall rise in body temperature at frequencies exceeding 100 kHz.
- Non-thermal effects encompass nerve stimulation for frequencies up to 10 MHz.

As the frequency increases, heating effects become more prominent, and the likelihood of nerve stimulation decreases. Various dosimetric quantities are employed to delineate exposure limits, contingent on the frequency or duration of exposure.

Thermal effects at frequencies below 6 GHz are commonly expressed in terms of specific energy absorption rate (SAR),

20436394, 0, Downloaded from https://ietresearch.onlinelibrary.wiley.com/doi/10.1049/wss2.12089 by Ecole Polytech De Montreal, Wiley Online Library on [03/09/2024]. See the Terms and Conditions (https://onlinelibrary.wiley.com/terms-and-conditions) on Wiley Online Library for rules of use; OA articles are governed by the applicable Creative Commons License

while absorbed power density is frequently applied for frequencies surpassing 6 GHz [56, 59].

SAR, which stands for Specific Absorption Rate, denotes the rate at which the human body absorbs energy when exposed to radiofrequency electromagnetic fields. The SAR is directly proportional to the square of the electric field (E-field) within human tissues, and it is influenced by various factors:

- The frequency, intensity, and polarisation of the electromagnetic field.
- The type of electromagnetic field source (whether near-field or far-field).
- The size, internal and external geometry of the exposed body part, and the dielectric properties of different tissues.
- Reflection effects of the field from objects near the exposed body.

The purpose of setting SAR limits is to regulate the absorption of radio frequency (RF) energy in the entire body, preventing thermal stress and local injuries. References [51, 57] outline the absorption of energy in the human body based on frequency ranges as follows:

- Between 100 kHz and 20 MHz: With decreasing frequency, absorption diminishes rapidly in the trunk, while significant absorption may occur in the neck and legs.
- Between 20 kHz and 300 MHz: Overall body absorption is high, and considering partial resonances can further increase it.
- Between 300 MHz and 10 GHz: Significant non-uniform, local absorption takes place.
- Above 10 GHz: Absorption primarily occurs at the body's surface.

3.2 | Implementation and operational challenges

WPT implementation and operation in actual applications raise challenges. These challenges are classified in technical challenges for higher frequencies, Alignment and localisation Challenges, EMC and standardisation challenges, cyber security challenges and etc. However, with the power level over 100 or even 200 kW, the resonant frequency becomes a dominant parameter, with direct and broad impacts on almost all aspects of WPT, including output power, power electronic elements, coupler space required, gap, coils' shape, and turnings [51, 58].

3.2.1 | Switching challenges

A full bridge rectifier in harvester side or an inverter in transmitter side, each has four switches consisting of four Mosfets and four diodes which switches two times in each period of current waveform. The rate at which the switches are turned on and off during the Pulse Width Modulation (PWM) process is named switching frequency. If the switches don't turn on and off quickly enough, the waveform becomes smoother and more sinusoidal, rather than having a rectangular shape.

The switching losses in the MOSFET and the diode are the product of switching energies and the switching frequency (f_{sw}):

$$P_M = R_{DSon}.I_{Drms}^2 + \left(E_{onM} + E_{offM}\right).f_{sw}, \tag{5}$$

$$P_D = u_{D0}.I_{Fav} + R_D.I_{Frms}^2 + E_{onD}.f_{sw}, \tag{6}$$

where P_M is the Mosfet loss, R_{DSon} is the drain source ON resistance of the MOSFET, I_{Drms} is the rms value of the drain current, E_{onM} and E_{offM} are the turn ON/OFF energy loss of the MOSFET, f_{sw} is the speed of switching (Switching frequency), P_D is the anti parallel diode loss, u_{D0} is the DC voltage source, I_{Fav} is the average diode current, R_D represents the diode on-state resistance, I_{Frms} is the rms value of diode current and E_{onD} represents the turn-on energy in the diode [67].

If the switching is too fast, we get a better sinusoidal wave with lower Total Harmonic Distortion (THD), which improves power conversion efficiency (PCE). However, the switching itself causes losses, as shown by the equations 5 and 6.

Given that the size of the antennas or the coupler is limited due to environmental, application or cost limits, increasing the switching frequency is a major focus to achieve higher output power, as quantified by analytical analysis. To achieve high power and high switching frequency simultaneously, the state-of-the-art technologies of *SiC* modules (Silicon Carbide) are reviewed. Challenges and barriers of EMI, switching losses, and iron losses are also discussed for high power and high-frequency *SiC* applications for WPT [51, 58, 59].

3.2.2 | Alignment challenges

Even in non-radiative WPT methods such as inductive and capacitive systems, alignment is imperative. In radiative methods such as optical or ultrasonic, poor alignment results in low coupling factors and reduces the link efficiency and efficiency may drop to even zero. Due to this challenge, the RF-WPT method is prioritized over other radiative methods because it requires less precise alignment.

3.2.3 | Localisation challenges

In a wireless systems, the transmitter should preferably know the location of the receiver for having the highest efficiency, as power can be steered in one or multiple specific directions. The location estimation must be accurate in the case of Inductive Power Transfer (IPT) but may be less strict for RF power transfer [59].

20436394, 0, Downloaded from https://ietresearch.onlinelibrary.wiley.com/doi/10.1049/wss2.12089 by Ecole Polytech De Montreal, Wiley Online Library on [03/09/2024]. See the Terms and Conditions (https://onlinelibrary.wiley.com/terms-and-conditions) on Wiley Online Library for rules of use; OA articles are governed by the applicable Creative Commons License

3.2.4 | EMC/EMI and standardisation challenges

The European Union introduced Directive (2014/30/EU) on electromagnetic compatibility, where EMC is defined as follows: "Electromagnetic compatibility means the ability of equipment to function satisfactorily in its electromagnetic environment without introducing intolerable electromagnetic disturbances to other equipment in that environment" [59]. This directive limits the electromagnetic interference (EMI) from electrical appliances so that, when properly used, they do not interfere with radio and telecommunications systems. The EMC standards are divided into immunity and emission standards [1–5, 9, 11, 13, 14, 16, 17, 26, 28, 35, 38, 46, 51, 52, 54–56, 58, 59, 68].

It is worth noting that despite the constant availability of RF waves in some areas, radio waves raise concerns about potential electromagnetic interference (EMI) and electromagnetic compatibility (EMC) [3, 4, 9, 11, 13, 14, 16, 17, 28, 38, 46, 51, 52, 54–56, 58, 59, 68].

To ensure the safe operation of electromagnetic field (EMF) devices, regulatory bodies such as the International Electrotechnical Commission (IEC) have set international standards and frequency limits for EMFs across various applications, such as broadcast, communication, military, medical, and household appliances, necessitating distinct emission and immunity standards for each category [1–5, 9, 11, 13, 14, 16, 17, 26, 28, 35, 38, 46, 51, 52, 54–56, 58, 59, 68].

Also, a Medium Access Control (MAC) protocol regulates device communication by managing access to the communication medium. Carrier sense multiple access (CSMA) is a widely used approach where devices wait for the medium to be free before sending data, and if it is in use, they introduce a delay, typically for a random duration, before trying to transmit again [1–5, 9, 11, 13, 14, 16, 17, 26, 28, 35, 38, 46, 51, 52, 54–56, 58, 59, 68].

Table 3 displays a selection of prominent organisations involved in the field of WPT, highlighting the abundance of such entities and the boundaries between them are not always clear cut. Frequently, these organisations maintain robust ties, manifesting as liaison statements or reciprocal participation in each other's activities [23].

Larger power transfer needs stronger fields, and of course, higher currents and voltages are present. Also, we know that when the switching frequency increases, high frequency electromagnetic interference (EMI) or frequency electromagnetic compatibility (EMC) becomes a challenge cause the inverter at the transmitter side will therefore be a larger source of electrical-noise pollution for several reasons [4, 17, 52, 60]:

- The amount of transferred power can be controlled by adjusting the duty cycle of the PWM signal in the inverter. This change can result in the loss of zero voltage switching off the power switch and cause high voltage changes in time dv/dt. Subsequently, a changing magnetic and electric field is created, which carries the high dv/dt. The fields around conducting components cause common-mode currents to flow from the system to the environment and back via the mains. This results in conducted interference or, more precisely, common-mode interference.
- Radiated EMI can be induced by switching large currents in the inverter, which cause large current changes in time di/dt. Furthermore, radiated EMI can also be caused by the leakage field of the inductors, due to poor coupling between transmitter and receiver.

TABLE 3 Regulatory bodies and EMC standards [35].

Organisation	Geographical influence	Sector	Note
SMC	Global	Electrical/Telecoms	Aerospace Industry
DEF-STAN	Regional	Electrical/Telecoms	UK and US military standards
MIL-STD	Regional	Electrical/Telecoms	UK and US military standards
RTCA Do-160	Global	Electrical/Telecoms	Aerospace Industry
Euro CAE-ED 14	Global	Electrical/Telecoms	Aerospace Industry
APT	Regional	Telecoms	Asia Pacific Region
CENELEC	Global	Electrical	
CEPT/ECC	Regional	Telecoms	Europe
CISPR (IEC)	Global	Electrical	Automotive & Railway Industry
ETSI	Regional	Telecoms	Europe
FCC	National	Telecoms	USA
ICNIRP	Global	Health	
IEC	Global	Electrical	
IEEE	Global	Telecoms/Electrical /Health Professional Organisation /All Industries	
ISO	Global	General	
ITU	Global	Telecoms	

As we know, WPT systems produce a certain level of EMI (electromagnetic interference) that can adversely affect the performance of nearby electrical/electronic equipment by radiated and conducted emission. In WPT systems, common mode noise is the main source of EMI issues, which is difficult to eliminate. Symmetrical and perfectly differential construction of transmitters and receivers can somewhat mitigate this issue.

Besides the transmitter, the rectifier in the receiver is the highest source of harmonics. The discontinuities caused by the sharp transitions in the rectifier are coupled directly to the coils in near field WPT and to the antennas, which radiate this as high-frequency noise. To minimise the harmonics, the notch/bandpass harmonic filters can be used with the rectifiers.

20436394, 0, Downloaded from https://ietresearch.onlinelibrary.wiley.com/doi/10.1049/wss2.12089 by Ecole Polytech De Montreal, Wiley Online Library on [03/09/2024]. See the Terms and Conditions (https://onlinelibrary.wiley.com/terms-and-conditions) on Wiley Online Library for rules of use; OA articles are governed by the applicable Creative Commons License

- **Conducted Emission**: Conducted emissions are harmonics and unwanted electromagnetic signals which effect in power quality in a circuit. These harmonics are conducted along wires or signal cables, potentially causing interference with other electronic devices. In WPT systems, these conducted emission signals occur via electrical and magnetic coupling in antennas or in both side circuits by antennas, electronic switches, and diodes or PWM control devices, which form a part of electromagnetic compatibility issues in the WPT system. These affect the ability of all interconnected system devices in the electromagnetic environment or in the system by dramatically reduce in efficiency and increase in components loss and the restricting or limiting their intentional generation, propagation, and reception of electromagnetic energy. To mitigate the impact of conducted emissions various methods could be implemented, including the use of filters, shielding, and proper grounding techniques [68]. To test the conducted emission, a sample of test method, test setups and the limitation of the measured emissions for each class could be find in IET-CISPR25 [68].
- **Conducted Immunity**: Besides the conducted emission, conducted immunity or susceptibility is another important EMC issue which should be checked in a system to evaluate the susceptibility and the immunity level of a system [68].
- **Radiated Emission**: Radiated emission based on the concept is the unintentional release of electromagnetic energy from an electronic device. Electronic components may generate electromagnetic fields that could propagate from the device. These unwanted emissions at frequencies outside their intended transmission frequency band may interfere with the surrounding electromagnetic waves and effect of nearby electronic devices. Radiated emission has also negative effect on public safety side by side with making interference with the protected frequency bands and communication waves. For radiated emission tests, total eight samples of test methods with different antennas and polarisation (for wide ranges of frequency bands) and the limitation of the measured emissions under each test could be found in ref. [68].
- **Radiated Immunity**: Besides the radiated emission, radiated immunity or susceptibility is another important EMC issue which should be checked in a system to evaluate the susceptibility and the immunity level of a system. By immunity test, the ability of electronic components and the system to operate properly in the presence of external electromagnetic field and radiation could be evaluated [68].

3.2.5 | De-sense caused by in-band noise and shielding in wireless communications

The EMI noise produced by the system must be reduced at the antennae to maintain an appropriate signal-to-noise ratio. Furthermore, any shielding near the antennae can cause a degradation in sensitivity (de-sense). At low frequencies (near 110–205 kHz), ferrites used as shields reduce the receiver sensitivity. This could worsen cell reception in low-signal areas. Requirements regarding de-sense are much harder to meet than EMI compatibility. These are easier to meet at high frequencies because 6.78 MHz antennae cause a sensitivity reduction of only 2 dB [51].

3.2.6 | Heat dissipation at high power wireless charging

Most of the high-power wireless charging systems based on inductive coupling have a system efficiency between 80% and 90%. In a 5 kW system, these efficiencies correspond to a heat loss of approximately 750 W. These losses will rise system temperature, which has an effect on the efficiency [6, 59].

Power losses in high-power charging systems can be caused by the properties of those systems. The main causes for heat losses are Joule heating, skin effect, proximity effect, switching losses in the power stage, and rectifier losses at the receiver.

- **Joule heating**: is a phenomenon that occurs when a current flows through a cable or component. Each cable, connection, path etc. has a certain resistance, which in combination with the current causes a power loss, $P = RI^2$.
- **Skin effect**: occurs when an alternating current flows through conductors. This phenomenon causes the current to flow through the "skin" of the conductor. The higher the frequency, the smaller the skin depth, which results in a higher resistance. This in turn will cause the cable to heat up and cause extra joule losses. Hence, a snowball effect can occur: warmer cable sheathing can increase the resistance of the cable, more heating etc. The skin depth can be calculated by the following [59]:

$$d_s = \sqrt{\frac{2}{\omega.\mu.\gamma}}, \tag{7}$$

  where ω is the angular frequency of the alternating current, $2.\pi$ is the frequency (rad/s), μ is the magnetic permeability of the conductor (H/m), and γ is the resistance of the conductor (S/m).
- **Proximity effect**: refers to a phenomenon that occurs when two conductors, in which an AC current flows, are close to each other. This will result in Eddy currents and change the current density. When the currents in adjacent conductors have the same direction, the current will concentrate on the outside of the conductor. Vice versa, when the two currents are opposite, the current will concentrate on the inside of the conductor. The Eddy currents in proximity effects are created due to the variable magnetic field of the current in the adjacent winding layer, whereby the amplitude of the Eddy currents increases exponentially with the number of coil windings/layers [59].
- **Switching losses in the power stage**: Switching components, such as MOSFETs, need a certain time to switch on and off, which causes losses. This reduces the efficiency of the power stage. The switch heats up faster, which may have

20436394, 0, Downloaded from https://ietresearch.onlinelibrary.wiley.com/doi/10.1049/wss2.12089 by Ecole Polytech De Montreal, Wiley Online Library on [03/09/2024]. See the Terms and Conditions (https://onlinelibrary.wiley.com/terms-and-conditions) on Wiley Online Library for rules of use; OA articles are governed by the applicable Creative Commons License

other consequences, such as a higher internal resistance or in the worst case exceeding maximum temperatures [59].

- **Rectifier losses at receiver side**: Power can be transmitted using high-frequency currents. These are usually not directly useable in typical applications, so currents must be rectified at the receiver side. In general, a passive rectifier with diodes is used. When a diode conducts, there will be a forward voltage over it. This will cause high power losses because high currents will flow [59].

4 | CIRCUIT ARCHITECTURE AND CHALLENGES

The power transfer efficiency through the air is typically low because of the dispersive nature of free-space EM wave. Since there is no control on the environment, therefore, to enhance the efficiency of RF-WPT system, using high efficiency circuits in both sides are crucial. Also, the antenna array system with multiple transmit and receive antennas can implement such a large aperture WPT system [7, 8, 19, 22, 24, 27, 28, 30, 32, 42, 47, 63].

For the radiated part of WPT systems it is worth to note that the comprehensive consideration of various factors, including the radiation pattern, polarisation, and mutual coupling within antenna arrays, holds immense significance and importance. The polarisation characteristics of antenna elements are crucial in minimising polarisation losses and enabling seamless power transfer, even when transmitter and receiver orientations differ. The intricate understanding of mutual coupling between antennas aids in reducing interference and optimising the overall power transfer efficiency, which is vital for the success of WPT systems [7, 8, 19, 22, 24, 27, 28, 30, 32, 42, 47, 63]. Another critical aspect in this context is the integration of beamforming techniques. Through precise beamforming, power can be efficiently directed to specific receivers, mitigating losses and ensuring consistent, reliable energy transfer [12, 27, 37, 59].

Dividing the RF energy system's components into two distinct parts facilitates a systematic approach to its design and functionality, radiated and conducted parts. The first part encompasses WPT, featuring transmitting and receiving antennas, along with the essential WPT system requirements. This component primarily focuses on the efficient transmission and reception of RF energy, considering factors, such as antenna design, alignment, and the fundamental principles of power transfer. In contrast, the second part, takes centre stage in converting source power to RF wave and in the harvester side, converting the received RF energy into useable DC power. This segment involves critical elements, such as rectifiers, impedance matching networks, voltage multipliers, and possible power management systems, including real-time control (RTC). These components work harmoniously to extract, condition, and manage the harvested energy.

For high power application, the main burden would be on transmitter side because of the medium path loss, so we have highest drawbacks on electronic components used in transfer circuit. In the other hand, in harvesting side we need impedance matching circuit which integrates with received antenna and makes rectenna. Rectenna design for a resistive load like battery storage is easy and almost all references are focused on it due to the nature of low power RF-WPT, but Constant Power Loads (CPL) which act like Maximum Power Point Tracking (MPPT) unit due to impedance variation would be a great challenge, so it needs its own control system.

Figure 2 shows the general block diagram of RF-WPT system in transmitter side and the hardware architecture of a phased array circuit commonly used in low power wireless energy transfer systems. Also, block diagrams depicted in Figure 3, shows the regular RFEH hardware architecture system and their components for constant resistive low voltage applications.

By having a simple rectification and voltage multiplier circuits which commonly are used in the literature, we do not have control option due to the low-voltage nature of the system. Those systems mostly as previously said, consider a constant resistive load which has a constant voltage and hardly consider the variation of the distance between the transmitter and harvester part and the problem will be solved by using an impedance matching circuit.

Due to their low power nature, the designers focus on the lowest possible switching which cause the loss in the circuit.

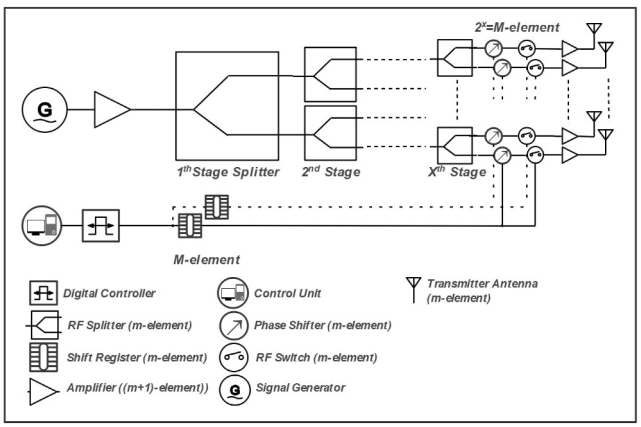

FIGURE 2 Hardware architecture of WPT system with phased array circuit (with X-Stage and M-element) [40, 41].

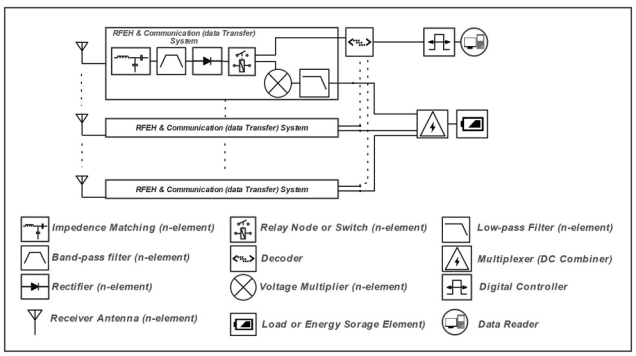

FIGURE 3 Hardware architecture of RFEH system integrated with wireless data transfer unit in phased array circuit (with N-element) [40, 41].

20436394, 0, Downloaded from https://ietresearch.onlinelibrary.wiley.com/doi/10.1049/wss2.12089 by Ecole Polytech De Montreal, Wiley Online Library on [03/09/2024]. See the Terms and Conditions (https://onlinelibrary.wiley.com/terms-and-conditions) on Wiley Online Library for rules of use; OA articles are governed by the applicable Creative Commons License

But for having a system which is more compatible with the reality, a system which consider the distance variation and consequently varying input power at the harvester side, these kinds of designs are not suitable.

In case of changing in the power intensity, distance between antennas or any factor like frequency, polarisation or having a constant power load instead of a resistive load or etc., the IMN will not work efficiently and the mismatch dramatically reduces the PCE factor.

To solve this problem and having a real time control on the IMN network—especially for constant power at harvester side or even integrating a MPPt systems which acts like a constant power load—we need a controllable switch to mitigate the effect of mismatch. This is because of having a constant maximum power which makes the voltage at load part variable. For this reason, using AC/DC converters in harvester side could help in voltage stabilisation PI control due to their controllability.

In high-power applications, designing a more realistic and controllable RF-WPT system requires considering AC/DC converters. Although these converters have more switches, which increases switching losses, an optimal control strategy can help minimize these losses.

For the Transfer side, due to the nature of high-power RF-WPT system and limitation on logic circuits and drawbacks on shift registers—unlike low power RF-WPT systems and because of lower distance targets in compare with the RFEH applications and their voltage and distance level—we can use FPGA and controllable MOSFETs for this side, even we know they have more loss compared with combination of shift registers and diodes proposed here. Figure 4 shows RF-WPT system hardware architecture with inverter and converter components.

4.1 | Circuit components in RF-WPT transmitter side

For low voltage systems, as shown in Figure 2, the transmitter side has a number of RF-Splitter equal to stage numbers and a number of phase shifter switches equal to number of antenna's elements which are controlled by shift registers and the signals are amplified with amplifiers before inserting into the antenna's elements. This configuration is regularly used in RF-WPT systems in low power applications. Using logic circuits in shift registers and independently controlling low-voltage RF switches doesn't pose a significant challenge for low-power RF-WPT systems. This is true as long as the number of antenna elements, and therefore the number of switches, is carefully designed to maximize the efficiency of the transmit circuit.

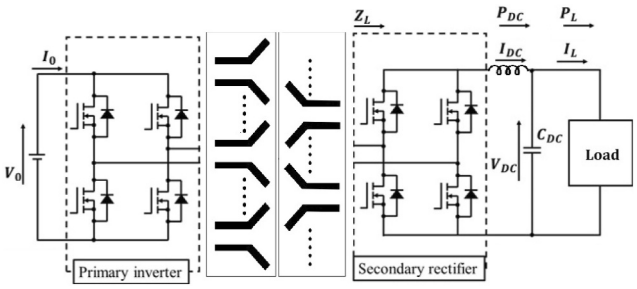

FIGURE 4 Controllable inverter and converter based architecture of RF-WPT system.

The limitations of these components ultimately lead us to use the configuration shown in Figure 4, which replaces the pack of shift registers, phase shifters, and RF switches with an inverter for high power applications.

4.1.1 | Limits on power divider (RF splitter) at high power

A power divider or RF splitter is a passive electronic component used in radio frequency (RF) and microwave systems to split an input signal into multiple output signals while maintaining proper impedance matching. There are several types of power dividers or splitters used in WPT systems, such as Tee Junction Power Divider, Wilkinson Power Divider, Hybrid Coupler, Directional Coupler etc. [69]. Power dissipating in mismatch condition and insertion loss because of internal resistors are common disadvantages of RF-dividers. Besides, the power handling capability of a power splitter is basically determined by the internal resistor across the transformer and the transformer's core and wire size. When used as power splitter, the core of the transformer may saturate at the lower frequency end of the operating band if the designated power rating is exceeded; signal distortion and reduction in isolation may result. At high RF frequencies, usually small diameter wire is used thus limiting the safe current level that can flow before failure.

4.1.2 | Operational limits of shift registers at high power

Shift registers are logic circuit-based components used for control and synchronisation purposes in WPT transmitter side. Some common types of shift registers suitable for WPT and other RF applications include SISO, SIPO, PISO and PIPO configurations [70]. The major drawback is that the output current of Register is limited. Shift register devices regularly are unsuitable for high-power systems due to their inherent limitations and drawbacks. Their low voltage and current ratings, lack of ruggedness, and incompatibility with analogue power control make them impractical for high-power applications. Instead, high-power systems require specialised components such as high-power transistors, thyristors, relays, and solid-state switches, designed to handle the demands and stresses of high-power environments, ensuring reliability, safety, and compatibility.

4.1.3 | Operational limits on phase shifter

Phase shifters are electronic components used to manipulate the phase of electromagnetic signals. Phase shifters also aid in

20436394, 0, Downloaded from https://ietresearch.onlinelibrary.wiley.com/doi/10.1049/wss2.12089 by Ecole Polytech De Montreal, Wiley Online Library on [03/09/2024]. See the Terms and Conditions (https://onlinelibrary.wiley.com/terms-and-conditions) on Wiley Online Library for rules of use; OA articles are governed by the applicable Creative Commons License

phase matching to align signals when the transmitter and receiver are not perfectly aligned, optimising power transfer efficiency. Furthermore, they contribute to sidelobe control by adjusting relative phases within antenna arrays, reducing interference [71]. But the phase Shifters are designed to operate over narrow frequency band and support limited phase shift range. The other challenges with phase shifters include having limited linearity and hence affect accuracy of the phase shift. Also, they are required to be calibrated for accurate phase shifting and are sensitive to temperature changes which affect the performance.

4.1.4 | Operational limits on RF switch at high power

Some well-known RF switches used in WPT systems are FET-based switches, PIN diode-based SPST and SPDT switches in series and shunt modes. The RF system requirement that usually determines the choice of the particular PIN Diode to be used is the RF power that the switch must handle. The PIN Diode characteristically has relatively wide I-region and can therefore withstand larger RF Voltages than Varactors or microwave Schottky diodes. The switch's power dissipation is considered as a limiting factor in determining the maximum RF power level that the PIN diode switch can control without overheating.

The PIN diode SPST can be used in broadband designs. The maximum isolation obtainable depends on the diode's capacitance. The insertion loss and power dissipation depend on the diode's forward biased series resistance.

The Shunt SPST switch, however offers high isolation over a broad frequency range. Insertion loss is low because there are no switch elements in series with the transmission line.

4.1.5 | Operational limits of RF amplifier at high power

RF amplifiers used in WPT systems should be carefully selected based on factors, such as the desired output power, frequency range, linearity, and efficiency. They come in various types, including solid-state (such as transistor-based) and vacuum tube amplifiers. Disadvantages, constraints and drawbacks of RF amplifiers can be classified based on the type of the amplifiers. For the vacuum tubes amplifiers, limits and disadvantages are: being bulky, hence less suitable for portable products. Also they need higher operating voltages so they have high power consumption; needs heater supply that generates waste heat and yields lower efficiency, notably for small-signal circuits. Also, glass tubes are fragile compared to metal transistors and they generally are high-impedance devices that need impedance matching transformer for low-impedance loads; however, the magnetic cushion provided by an output transformer prevents the output tubes from blowing up. They also use cathode electron-emitting materials. For the transistor amplifiers limitations at high power level are even more: distortion tends to be higher compared to equivalent tubed circuits. They also have a complex circuits and considerable negative feedback required for low distortion. The sharp clipping inherent in their design, often attributed to the prevalent use of negative feedback, is commonly deemed musically unpleasing due to its abrupt and harsh nature. Variations in device capacitances, manufacturing tolerances, and inconsistent parameter performance further complicate their design and operation. Thermal considerations add another layer of complexity, as transistor parameters fluctuate significantly with temperature, posing challenges in biasing and increasing the risk of thermal runaway. Cooling inefficiencies necessitate bulky heat sinks, while power MOSFETs introduce additional complexities with their voltage-dependent input capacitances. Moreover, transistors are less tolerant of overloads and voltage spikes than tubes, posing greater risks to both amplifier and speaker integrity. Maintenance proves challenging, and biasing becomes intricate due to temperature effects and device variations. Additionally, the availability of older transistors and ICs diminishes over time, unlike the enduring presence of tubes.

4.1.6 | Limits of RF connector at high power

The choice of RF connector depends on factors like frequency range, power levels, compatibility, and environmental conditions, with proper selection and installation being crucial for reliable RF signal transmission in WPT systems. RF connectors are commonly used in high-power applications, but they come with notable limitations and drawbacks in such demanding environments. These limitations include their finite power handling capacity, the potential for heating and signal loss at high power levels, and their relatively large size and weight, which may not be ideal for space-constrained or weight-sensitive systems. Additionally, RF connectors have frequency limitations, and their repeated mating and unmating can lead to wear and reduced reliability over time. SMA connectors employ threaded connections and offer precision levels suitable for frequencies up to 26.5 GHz (with some models, such as those developed by Yingkang Connector Co., Ltd., extending to 30 GHz). Their maximum operational frequency is primarily determined by the connected cable. The advantages of SMA connectors lie in their ability to handle high frequencies, their compact size, and their stable connections.

4.1.7 | Limits of DC/DC converter at high power

Converters are crucial in WPT systems because they offer controllability, tolerate high power levels, and can replace many other electrical components in the circuit. While the ideal buck converter can theoretically provide any output voltage from V_{IN} down to 0 V, practical limitations do exist. The output voltage can not go below the internal reference voltage, and internal circuit operation may limit the minimum ON time and maximum duty cycle. Additionally, the real-world circuits contain losses. These losses can act to extend the duty cycle at

20436394, 0, Downloaded from https://ietresearch.onlinelibrary.wiley.com/doi/10.1049/wss2.12089 by Ecole Polytech De Montreal, Wiley Online Library on [03/09/2024]. See the Terms and Conditions (https://onlinelibrary.wiley.com/terms-and-conditions) on Wiley Online Library for rules of use; OA articles are governed by the applicable Creative Commons License

higher load currents and may be used to one's advantage when the output-voltage extremes exist. However, by optimising their control system and a better switching strategy this loss could be mitigated.

4.2 | Circuit components in RFEH side

Apart from the receiving antenna, which may consist of an array of receivers, the RFEH board comprises a series of circuits and components. These boards serve to convert the acquired AC power, level it, and boost the voltage. Subsequently, they combine the voltage outputs from these circuits and deliver the resulting power to the load. To enhance efficiency, a maximum power point tracking system can be employed. In the context of integrated data transfer systems with RFEH systems, switches and relay nodes play a pivotal role in extracting data from energy waves. The following sections will provide a detailed examination of these system components. Figure 3 shows the harvester circuit diagram which has Impedance Matching Network (IMN), filters, Ac/DC circuit, voltage multiplier and DC-combiner. This arrangement is almost common for all the RFEH circuits proposed in low power levels. But, Figure 4, which includes a controllable AC-DC converter with a filter is more reliable for high power applications.

Hence, in far field RF-WPH systems, there are a lot of power loss, major high-power limits exist on the transfer sides not in the receiver side, but still there some consideration while the system is designed for high power application:

As it said befor, conventional RF rectifier mainly consists of rectifying elements, impedance matching network, DC pass filter and load resistor. Rectifying elements are usually arranged in single series, shunt, voltage doubler or bridge configurations. Efficiency of the RF rectifier primarily depends on the rectifying element and the impedance matching network. Conventional rectifier usually utilise Si-based Schottky diodes for rectification. Conversion efficiency in high-power region is restricted by the low breakdown voltage in silicon Schottky diodes. Large voltage and current swings arise in Schottky diodes due to the high RF (radio frequency) input power. This triggers a breakdown in the metal-semiconductor junction and can permanently damage a diode. Thus, Si Schottky diode-based rectifiers usually operate below watt-level input power.

In order to prevent the breakdown in low-power capability diodes for realising high-power rectifiers, power divider circuits are utilised to split the high input power into several diode circuits. A stepped impedance transformer and coupled lines are employed to develop a planar Wilkinson power divider. However, these circuits based on transmission lines are complex in structure and large in size. To solve the low breakdown voltage problem of the Schottky diodes in the zero-bias and full-wave bridge rectifiers, the one-to- four series-dividing transformer and parallel-dividing transformer for impedance matching and power dividing can be employed. Diode arrays were also used to increase the power capacity of microwave rectifiers. However, these approaches introduce additional size and losses, as well as increase the circuit complexity. Also, for the voltage multipliers used in RFEH board- based there are current and voltage type limitations as follows:

- Current Limitation: while voltage multipliers can produce high voltages, they are typically not designed to deliver high currents. This limits their use in high power applications.
- Voltage Regulation: voltage multipliers can suffer from poor voltage regulation, particularly when the load varies. This means that the output voltage may not be stable under different load conditions.

5 | DESIGN METHODOLOGY, OPTIMISATION OBJECTIVES AND CONSTRAINTS

The design methodology for a WPH system places strong emphasis on key considerations to enhance efficiency. The steps for system design are depicted in the flowchart shown in Figure 5. Designing an A-RFEH system is comparatively simpler than a WPH system. In the case of the WPH, not only are antennas involved on both ends, but other circuit

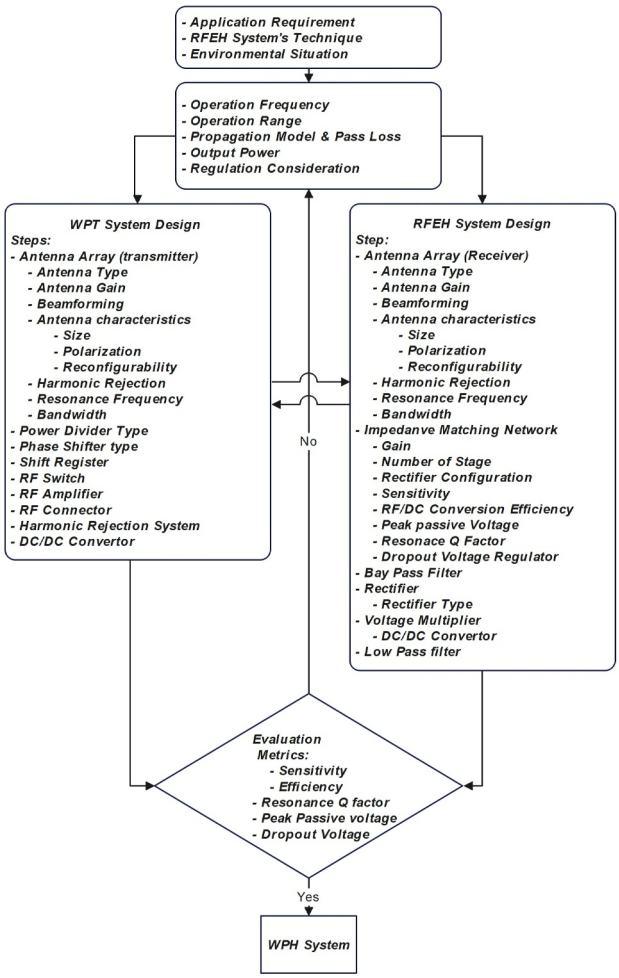

FIGURE 5 WPH systems design flowchart.

20436394, 0, Downloaded from https://ietresearch.onlinelibrary.wiley.com/doi/10.1049/wss2.12089 by Ecole Polytech De Montreal, Wiley Online Library on [03/09/2024]. See the Terms and Conditions (https://onlinelibrary.wiley.com/terms-and-conditions) on Wiley Online Library for rules of use; OA articles are governed by the applicable Creative Commons License

values and parameters on both ends can also influence each other, resulting in a more complex optimisation process. Optimising a WPH system or just an A-RFEH system necessitates defining specific objectives and integrating individual modules in a cohesive manner to achieve the objectives. The detailed features and considerations of each module must be explored to ensure they operate together seamlessly and efficiently. Researchers can choose a single or hybrid methodology, employing various methods, software, and equations or they could focus an optimising just a single part of the system.

5.1 | Main objective

To optimise and improve the WPT system, side by side with antenna optimisation and optimisation of the components and total circuits in both transfer and harvester and beside the optimal control systems in both sides, we need to optimise the WPT system based on the output power needed and distance. For this reason, using the Friss path loss for a sensitive analysis is essential.

The main objective to optimise the WPT system based on free space path loss in Equation (1) and the antenna characteristics in both sides are described as follows:

Objective:

$$P_R = P_T \times G_T \times G_R \times \left(\frac{\lambda}{4\pi d}\right)^2 \times VRC \times PLF. \quad (8)$$

where P_t and P_r are the transmitted and received power in *watt*, G_t and G_r are the transmitter and receiver antennas gains in *dBi*, λ is the wavelength of the RF signal in metre, d, is the distance between the primary and secondary sides, VRC is the voltage reflection coefficient and PLF is the polarisation loss factor.

5.2 | WPT—System constraints

The optimisation objective intrinsically has some constraints such as: PLF and VRC should be higher than zero and less than 1. d and λ should be higher than zero. G_t and G_r should be higher than zero to even higher than 60 *dBi*. P_t should be higher than zero and EMC constraints effects on the feasible region of this parameter. Also, P_r should be equal or higher than zero.

The polarisation loss factor is obtained by the following:

$$PLF = \left(\widehat{\rho}_t.\widehat{\rho}_r\right)^2 = \cos^2\left(\Psi_p\right), \quad (9)$$

where $\widehat{\rho}_t$ and $\widehat{\rho}_r$ are the polarisation unit vectors of the transfer antenna (T_X) and received antenna (R_X) which are the vectors perpendicular to the direction of propagation for both transmitter and receiver; also, Ψ_p represents the angle between the polarisations of the transmitted and received signals.

Also, the voltage reflection coefficient is obtained by the following:

$$VRC = \left(1 - \left(\Gamma_t\right|^2\right)\left(1 - \left(\Gamma_r\right|^2\right), \quad (10)$$

where Γ_t and Γ_r are the voltage reflection coefficient at the input terminals of the transmit and receiving antennas and can be calculated using the antennas input impedance (Z_A) and the impedance of the coupled electronics (Z_L), (in transmission lines, receiver circuits and transmitter circuits). These values are given in Ω and depend on the used antennas and components.

$$\Gamma = \frac{Z_L - Z_A}{Z_L + Z_A}. \quad (11)$$

The path loss in Equation (8) is defined as follows:

$$PL = \left(\frac{\lambda}{4\pi d}\right)^2, \quad (12)$$

where the wavelength of the signal can be derived from the following:

$$\lambda = \frac{299792}{f}, \quad (13)$$

where f is the frequency of RF signal in Hz and it is between 3 Hz and 300 GHz. EMC constraints effects on the feasible region of the frequency as well as the intensity of the transferred signal.

P_R/P_T is the efficiency of the medium and antennas. Obviously, above objective is not a linear problem because of having several variables multiplying in each other in some of the constraints as well as the main objective; and neither a convex one cause the second order derivative is not positive. Also, if we consider an array if $n \times n$ transmitter versus $m \times m$ harvester antennas the hessian matrix determinant is not semi positive as well. In addition, the feasible regions are not convex too. It means obviously we could find two possible feasible points in the region which if we connect them by a straight line a part of that line could be out of the feasible region.

To solve such a problem, we could use gradient descent optimisation methods. So, the local optimal points could be extracted, then by using the metaheuristic method we will try to find to find the global maximum point (like tabu, Ga, simulated annealing).

5.3 | System's efficiency

As is clear, the efficiency is the most important factor in WPH system that show the performance and the feasibility of the overall system for certain applications; as mentioned earlier, the overall efficiency relies on the incorporation of system components.

20436394, 0, Downloaded from https://ietresearch.onlinelibrary.wiley.com/doi/10.1049/wss2.12089 by Ecole Polytech De Montreal, Wiley Online Library on [03/09/2024]. See the Terms and Conditions (https://onlinelibrary.wiley.com/terms-and-conditions) on Wiley Online Library for rules of use; OA articles are governed by the applicable Creative Commons License

The overall efficiency in WPH systems is the ratio between the DC output power delivered to the load and the AC input power generated by the signal generator at the wireless power transfer side:

$$\eta_{total} = \frac{DC_{output\ power}}{AC_{wave\ input\ power}}. \tag{14}$$

It generally could be divided into five parts: the efficiency of the wireless power transfer system board, the efficiency of the transmitting antenna, the efficiency of the medium, the efficiency of the receiving antenna, and the RF energy harvesting circuit efficiency.

$$\eta_{total} = \eta_{WPT-circuit} \times \eta_{transmitter} \times \eta_{med} \times \eta_{reciever} \times \eta_{RFEH-circuit} \times \eta_{storage}. \tag{15}$$

As demonstrated, the transmitted RF signal travels through a wireless transmission medium and is received by a designated antenna. The distance between these two antennas, the transmitter and the receiver, determines whether the system falls into the near-field or far-field category. The acquired RF signal is initially in AC form, and through the RFEH circuit, it undergoes conversion into DC, resulting in an elevation of its voltage level. Subsequently, the gathered energy can be either stored in an energy storage device like a rechargeable battery or super-capacitor or directly channelled to power a load.

For assessing the viability of RFEH or WPH systems, it is important to recognise that, in particular scenarios, the overall efficiency of the system relies on two factors: the output DC voltage post-storage and the considerations of energy leakage and charging rates. This implies that the charging rate of the battery or capacitor must exceed the rate of energy loss over time.

6 | FUTURE WORKS

By reviewing the literature in this survey, it could be found that there are several open issues for the future in the domain of high-power RF energy transfer systems that need to be considered:

- Design and Optimisation of a high power level RF-WPT and RFEH circuits by considering the EMA/EMC limits in a defined distance for a specific use-case.
- Design and Optimisation of an RFEH system for constant power loads and by having a controllable voltage regulator: Since almost all the RFEH literature is focused on the low voltage application, resistance load or constant voltage load is the only and easiest load type which they have considered for their systems, and the constant power load which might dramatically decrease the efficiency due to the mismatch effect is almost never studied.
- A survey on the effect of switching loss on RF-WPT system efficiency: For having a better insight about the effect of using converters in both transfer and receiver circuits, and consequently the effect of switching and on the electronic component loss and consequently the total system's loss, a sensitivity analysis is required.
- Design and Optimisation of a real time and controllable rectenna and WPT circuit for non-constant secondary side systems (harvester) for having maximum PCE.
- AC-DC and DC-DC converters switching strategy optimisation for WPT and RFEH circuits: Since for having an efficient phase shifting at both sides, we need to control the switches, the effect of a good switching control to have the lowest conducted emission, in the system will show up.

7 | CONCLUSIONS

This paper has provided an in-depth exploration of high-power wireless energy transfer as a cutting-edge technology, making it highly suitable for applications in the military, aerospace, and automotive industries. While research on high-power WPT has primarily concentrated on non-radiative methods, this paper embarks on an exploration of radiative approaches, specifically focussing on the RF-WPH method due to its unique merits. Our research has not only delved into the principles and techniques of both RF transfer and RF harvester systems but also offered an innovative perspective by considering the feasibility of high power radiative energy transfer method and the challenges. In addition, limitations on electronic components used in high-power RF-WPH systems are discussed. The organised structure of this review paper has provided a detailed journey through the world of RF-EH, addressing key aspects ranging from the classification of RFEH systems to design methodologies and efficiency considerations. In this paper, we defined the objective and constraints of the WPT systems, and by having an in-depth look at the literature, we have found out the open issues for future works in high power level radio frequency wireless energy transfer systems. Those open issues are explained in the Section 6 of this paper. In conclusion, this paper offers valuable insights into the challenges and nuances of high-power RF wireless energy transfer methods for longer distances in comparison with non-radiative methods.

AUTHOR CONTRIBUTIONS

Javad Soleimani: Conceptualization; methodology; investigation; data curation; writing – original draft; software; analysis; validation; visualization. **Gunes Karabulut Kurt**: Supervision; conceptualization; methodology; writing – review & editing; funding and financial support.

CONFLICT OF INTEREST STATEMENT

The authors declare no conflicts of interest.

DATA AVAILABILITY STATEMENT

Data sharing not applicable—no new data generated, or the article describes entirely theoretical research.

20436394, 0, Downloaded from https://ietresearch.onlinelibrary.wiley.com/doi/10.1049/wss2.12089 by Ecole Polytech De Montreal, Wiley Online Library on [03/09/2024]. See the Terms and Conditions (https://onlinelibrary.wiley.com/terms-and-conditions) on Wiley Online Library for rules of use; OA articles are governed by the applicable Creative Commons License

ORCID

Javad Soleimani https://orcid.org/0000-0002-1977-3009

REFERENCES

1. Cansiz, M., Altinel, D., Kurt, G.K.: Efficiency in RF energy harvesting systems: a comprehensive review. Energy 174, 292–309 (2019). https://doi.org/10.1016/j.energy.2019.02.100
2. Sangaran, M., et al.: A review on the contemporary research on radio frequency energy harvesting. Int. J. Eng. Technol. 7(3.15), 52–58 (2018). https://doi.org/10.14419/ijet.v7i3.15.17406
3. Sherazi, H.H.R., Zorbas, D., O'Flynn, B.: A comprehensive survey on RF energy harvesting: applications and performance determinants. Sensors 22(8), 2990 (2022). https://doi.org/10.3390/s22082990
4. Ivanov, I.: Radio Frequency Energy Harvesting for Autonomous Systems. Ph.D. dissertation. University of Bedfordshire (2018)
5. Muhammad, S., et al.: Harvesting systems for RF energy: trends, challenges, techniques, and tradeoffs. Electronics 11(6), 959 (2022). https://doi.org/10.3390/electronics11060959
6. Gu, X., Hemour, S., Wu, K.: Far-field wireless power harvesting: nonlinear modeling, rectenna design, and emerging applications. Proc. IEEE 110(1), 56–73 (2022). https://doi.org/10.1109/jproc.2021.3127930
7. Georgiadis, A., et al.: Flexible hybrid solar/EM energy harvester for autonomous sensors. In: IEEE MTT-S International Microwave Symposium, pp. 1–4 (2011)
8. çelik, K., Kurt, E.: Design and implementation of a dual band bioinspired leaf rectenna for RF energy harvesting applications. Int. J. RF Microw. Computer-Aided Eng. 31(11) (2021). https://doi.org/10.1002/mmce.22868
9. Song, M., et al.: Wireless power transfer based on novel physical concepts. Nat. Electron. 4(10), 707–716 (2021). https://doi.org/10.1038/s41928-021-00658-x
10. Clerckx, B., Bayguzina, E.: Waveform design for wireless power transfer. IEEE Trans. Signal Process. 64(23), 6313–6328 (2016). https://doi.org/10.1109/tsp.2016.2601284
11. Huang, J., et al.: Wireless power transfer and energy harvesting: current status and future prospects. IEEE Wireless Commun., 1–7 (2019)
12. Kim, K., Choi, J.-W.: Influences of magnetic couplings in transmitter array of MIMO wireless power transfer system. In: IEEE Wireless Power Transfer Conference (WPTC), pp. 531–535 (2019)
13. Zhang, Y., et al.: Design of high-power static wireless power transfer via magnetic induction: an overview. CPSS Trans. Power Electron. Appl. 6(4), 281–297 (2021). https://doi.org/10.24295/cpsstpea.2021.00027
14. Gowda, V.R., et al.: Wireless power transfer in the radiative near field. IEEE Antenn. Wireless Propag. Lett. 15, 1865–1868 (2016). https://doi.org/10.1109/lawp.2016.2542138
15. Valenta, C.R., Durgin, G.D.: Harvesting wireless power: survey of energy-harvester conversion efficiency in far-field, wireless power transfer systems. IEEE Microw. Mag. 15(4), 108–120 (2014)
16. Tran, L.-G., Cha, H.-K., Park, W.-T.: RF power harvesting: a review on designing methodologies and applications. Micro Nano Syst. Lett. 5(1), 12 (2017). https://doi.org/10.1186/s40486-017-0051-0
17. Ibrahim, H., et al.: Radio frequency energy harvesting technologies: a comprehensive review on designing, methodologies, and potential applications. Sensors 22(11), 4144 (2022). https://doi.org/10.3390/s22114144
18. Caselli, M., Boni, A.: Modeling and design of 3-D MPPT for ultra low power RF energy harvesters. Integration 72, 21–28 (2020). https://doi.org/10.1016/j.vlsi.2020.02.008
19. Lu, C., Raghunathan, V., Roy, K.: Efficient design of micro-scale energy harvesting systems. IEEE J. Emerg Sel. Top. Circ. Syst. 1(3), 254–266 (2011). https://doi.org/10.1109/jetcas.2011.2162161
20. Marriwala, N.: Energy harvesting system design and optimization using high bandwidth rectenna for wireless sensor networks. Wireless Pers. Commun. 122(1), 669–684 (2022). https://doi.org/10.1007/s11277-021-08918-x
21. Wang, L., et al.: Radio frequency energy harvesting technology. In: 2016 International SoC Design Conference (ISOCC), pp. 219–220 (2016)
22. Bahhar, C., et al.: Design and optimization of high-efficiency rectenna for RF energy harvesting. In: PhotonIcs Electromagnetics Research Symposium—Spring (PIERS-Spring), pp. 2098–2105 (2019)
23. Ullah, M.A., et al.: A review on antenna technologies for ambient RF energy harvesting and wireless power transfer: designs, challenges and applications. IEEE Access 10, 17231–17267 (2022). https://doi.org/10.1109/access.2022.3149276
24. Aparicio, M.P., et al.: Radio frequency energy harvesting—sources and techniques. In: Cao, W., Hu, Y. (eds.) Renewable Energy. IntechOpen, Rijeka (2016). ch. 7
25. Popovic, Z.: Near- and far-field wireless power transfer. In: 13th International Conference on Advanced Technologies, Systems and Services in Telecommunications (TELSIKS), pp. 3–6 (2017)
26. Nadakuduti, J., Lu, L., Guckian, P.: Operating frequency selection for loosely coupled wireless power transfer systems with respect to RF emissions and RF exposure requirements. In: IEEE Wireless Power Transfer (WPT), pp. 234–237 (2013)
27. Yang, L., Zeng, Y., Zhang, R.: Wireless power transfer with hybrid beamforming: how many RF chains do we need. IEEE Trans. Wireless Commun. 17(10), 6972–6984 (2018). https://doi.org/10.1109/twc.2018.2865313
28. Haskou, A., Sharaiha, A., Collardey, S.: Theoretical and practical limits of superdirective antenna arrays. Compt. Rendus Phys. 18(2), 118–124 (2017). https://doi.org/10.1016/j.crhy.2016.11.003
29. Kwiatkowski, E., et al.: Broadband RF energy-harvesting arrays. Proc. IEEE 110(1), 74–88 (2022). https://doi.org/10.1109/jproc.2021.3134658
30. Colaiuda, D., Ulisse, I., Ferri, G.: Rectifiers' design and optimization for a dual-channel RF energy harvester. J. Low Power Electron. Appl. 10(2), 11 (2020). https://doi.org/10.3390/jlpea10020011
31. Mouapi, A., Hakem, N.: A new approach to design autonomous wireless sensor node based on RF energy harvesting system. Sensors 18(1), 133 (2018). https://doi.org/10.3390/s18010133
32. Muhammad, S., et al.: Design of a five-band dual-port rectenna for RF energy harvesting. Comput. Mater. Continua (CMC) 69(1), 487–501 (2021). https://doi.org/10.32604/cmc.2021.018292
33. Ali, M., Yang, G., Dougal, R.: A new circularly polarized rectenna for wireless power transmission and data communication. IEEE Antenn. Wireless Propag. Lett. 4, 205–208 (2005). https://doi.org/10.1109/lawp.2005.851004
34. Sun, H., Geyi, W.: A new rectenna with all-polarization-receiving capability for wireless power transmission. IEEE Antenn. Wireless Propag. Lett. 15, 814–817 (2016). https://doi.org/10.1109/lawp.2015.2476345
35. Kalialakis, C., Georgiadis, A.: The regulatory framework for wireless power transfer systems. Wireless Power Tran. 1(2), 108–118 (2014). https://doi.org/10.1017/wpt.2014.13
36. Nusrat, T., et al.: Far-field wireless power transfer for the internet of things. Electronics 12(1), 207 (2023). https://doi.org/10.3390/electronics12010207
37. Yedavalli, P.S., et al.: Far-field RF wireless power transfer with blind adaptive beamforming for internet of things devices. IEEE Access 5, 1743–1752 (2017). https://doi.org/10.1109/access.2017.2666299
38. Shen, S., et al.: Wireless power transfer with distributed antennas: system design, prototype, and experiments. IEEE Trans. Ind. Electron. 68(11), 10868–10878 (2021). https://doi.org/10.1109/tie.2020.3036238
39. Park, J.H., Kim, D.I., Choi, K.W.: Analysis and experiment on multi-antenna-to-multi-antenna RF wireless power transfer. IEEE Access 9, 2018–2031 (2021). https://doi.org/10.1109/access.2020.3047485
40. Park, J.H., et al.: Design and implementation of 5.8 GHZ RF wireless power transfer system. IEEE Access 9, 168520–168534 (2021). https://doi.org/10.1109/access.2021.3138221
41. Park, J.H., In Kim, D., Choi, K.W.: Experiments and modeling of 5.8 Ghz microwave wireless power transfer with multiple antennas. In: IEEE Wireless Power Transfer Conference (WPTC), pp. 115–118 (2020)

20436394, 0, Downloaded from https://ietresearch.onlinelibrary.wiley.com/doi/10.1049/wss2.12089 by Ecole Polytech De Montreal, Wiley Online Library on [03/09/2024]. See the Terms and Conditions (https://onlinelibrary.wiley.com/terms-and-conditions) on Wiley Online Library for rules of use; OA articles are governed by the applicable Creative Commons License

42. Muhammad, S., et al.: A dual-band ambient energy harvesting rectenna design for wireless power communications. IEEE Access 9, 99944–99953 (2021). https://doi.org/10.1109/access.2021.3096834
43. Sun, H.: An enhanced rectenna using differentially-fed rectifier for wireless power transmission. IEEE Antenn. Wireless Propag. Lett. 15, 32–35 (2016)
44. Song, C.M., et al.: Analysis of received power in RF wireless power transfer system with array antennas. IEEE Access 9, 76315–76324 (2021). https://doi.org/10.1109/access.2021.3083270
45. Massa, A., et al.: Array designs for long-distance wireless power transmission: state-of-the-art and innovative solutions. Proc. IEEE 101(6), 1464–1481 (2013). https://doi.org/10.1109/jproc.2013.2245491
46. Liu, C., et al.: Design and safety considerations of an implantable rectenna for far-field wireless power transfer. IEEE Trans. Antenn. Propag. 62(11), 5798–5806 (2014). https://doi.org/10.1109/tap.2014.2352363
47. Asma, B., et al.: A dual-band antenna for RF energy harvesting systems in wireless sensor networks. J. Sens. 2016, 1–8 (2016). https://doi.org/10.1155/2016/5725836
48. Sadek, D., Shawkey, H., Zekry, A.: Compact and high-efficiency rectenna for wireless power-harvesting applications. Int. J. Antenn. Propag. 2021, 1–8 (2021). https://doi.org/10.1155/2021/1109850
49. Yuan, Q., et al.: Numerical analysis on transmission efficiency of evanescent resonant coupling wireless power transfer system. IEEE Trans. Antenn. Propag. 58(5), 1751–1758 (2010). https://doi.org/10.1109/tap.2010.2044321
50. Awuah, C., et al.: Novel coil design and analysis for high-power wireless power transfer with enhanced Q -factor. Sci. Rep. 13(1), 4187 (2023). https://doi.org/10.1038/s41598-023-31389-y
51. Laha, A., et al.: A comprehensive review on wireless power transfer systems for charging portable electronics. Eng 4(2), 1023–1057 (2023). https://doi.org/10.3390/eng4020061
52. Chaari, M.Z., Al-Rahimi, R., Aghzout, O.: High power wireless power transfer for the future of the battlefield challenges. Secur. Defence Q. (2022). https://doi.org/10.35467/sdq/152548
53. Lovison, G., et al.: Secondary-side-only phase-shifting voltage stabilization control with a single converter for WPT systems with constant power load. IEEJ J. Ind. Appl. 8(1), 66–74 (2019). https://doi.org/10.1541/ieejjia.8.66
54. Kodeeswaran, P.S.S., Nandhini Gayathri, M., Peña-Alzola, R.: High-power converters and challenges in electric vehicle wireless charging—a review. IETE J. Res. 0(0), 1–20 (2023)
55. IEEE C95. 1-2019: IEEE standard for safety levels with respect to human exposure to electric, magnetic, and electromagnetic fields, 0 HZ to 300 GHZ. In: IEEE Std C95.1-2019 (Revision of IEEE Std C95.1-2005/ Incorporates IEEE Std C95.1-2019/Cor 1-2019), pp. 1–312 (2019)
56. International Commission on Non-Ionizing Radiation Protection (ICNIRP): Guidelines for limiting exposure to electromagnetic fields (100 KHZ to 300 GHZ). Health Phys. 118(5), 483–524 (2020)
57. Durney, C.H., Massoudi, H., Iskander, M.F.: Radiofrequency Radiation Dosimetry Handbook, 4th ed. USAF School of Aerospace Medicine, Aerospace Medical Division (1986). https://api.semanticscholar.org/CorpusID:60636657
58. Zhang, B., et al.: Challenges of future high power wireless power transfer for light-duty electric vehicles—technology and risk management. eTransportation 2, 100012 (2019). https://doi.org/10.1016/j.etran.2019.100012
59. Van Mulders, J., et al.: Wireless power transfer: systems, circuits, standards, and use cases. Sensors 22(15), 5573 (2022). https://doi.org/10.3390/s22155573
60. Rao, Y.S., Madhukumar, A., Sirigina, R.P.: RF energy harvesting based multiple access relay systems: a DMT perspective. IEEE Access 6, 76075–76086 (2018). https://doi.org/10.1109/access.2018.2883505
61. Clerckx, B., et al.: Wireless power transfer for future networks: signal processing, machine learning, computing, and sensing. IEEE J. Sel. Top. Signal Process. 15(5), 1060–1094 (2021). https://doi.org/10.1109/jstsp.2021.3098478
62. Joseph, S.D., et al.: Second harmonic exploitation for high-efficiency wireless power transfer using duplexing rectenna. IEEE Trans. Microw. Theor. Tech. 69(1), 482–494 (2021). https://doi.org/10.1109/tmtt.2020.3039604
63. Dolgov, A., Zane, R., Popovic, Z.: Power management system for online low power RF energy harvesting optimization. IEEE Trans. Circ. Syst. Regul. Pap. 57(7), 1802–1811 (2010). https://doi.org/10.1109/tcsi.2009.2034891
64. Ho, C.M., et al.: Mars background noise temperatures received by spacecraft antennas. Jet Propulsion Laboratory (JPL), California Institute of Technology (2002). https://api.semanticscholar.org/CorpusID:126621425
65. Kalita, H., Thangavelautham, J.: Strategies for deploying a sensor network to explore planetary lava tubes. Sensors 21(18), 6203 (2021). https://doi.org/10.3390/s21186203
66. Osepian, A., Kirkwood, S.: Cosmic radio-noise absorption bursts caused by solar wind shocks. Ann. Geophys. 22(8), 2973–2987 (2004). https://doi.org/10.5194/angeo-22-2973-2004
67. Dušan Graovac, A.K., Pürschel, M.: Mosfet power losses calculation using the data-sheet parameters. Tech. Rep., Infineon Application Note (2006)
68. Standard, I.I.: Vehicles, boats and internal combustion engines—radio disturbance characteristics—limits and methods of measurement for the protection of on-board receivers. Adv. Techn. Ceram. Monolithic Ceram. Gerneral Textural Prop., 372 (2021)
69. Pini, A.: The fundamentals of RF power dividers and combiners. DigiKey (2019). https://www.digikey.com/en/articles/the-fundamentals-of-rf-power-dividers-and-combiners
70. Kuphaldt, T.R.: Lessons in Electric Circuits: Chapter 12, Shift Registers, vol. 4. Design Science License (2007). https://www.ibiblio.org/kuphaldt/electricCircuits/
71. Mittal, N.: Frequency independent phase shifter. Circuit Cellar Mag. (2020). https://circuitcellar.com/research-design-hub/frequency-independent-phase-shifter/

How to cite this article: Soleimani, J., Karabulut Kurt, G.: High-power radio frequency wireless energy transfer system: comprehensive survey on design challenges. IET Wirel. Sens. Syst. 1–17 (2024). https://doi.org/10.1049/wss2.12089

20436394, 0, Downloaded from https://ietresearch.onlinelibrary.wiley.com/doi/10.1049/wss2.12089 by Ecole Polytech De Montreal, Wiley Online Library on [03/09/2024]. See the Terms and Conditions (https://onlinelibrary.wiley.com/terms-and-conditions) on Wiley Online Library for rules of use; OA articles are governed by the applicable Creative Commons License