POLYPUBLIE
Polytechnique Montréal

POLYTECHNIQUE MONTRÉAL
UNIVERSITÉ D'INGÉNIERIE

Titre: Title:	Steam and Water Combined Analysis, Integration, and Efficiency Enhancement in Kraft Pulping Mills
Auteur: Author:	Mohammad Javad Keshtkar
Date:	2013
Type:	Mémoire ou thèse / Dissertation or Thesis
Référence: Citation:	Keshtkar, M. J. (2013). Steam and Water Combined Analysis, Integration, and Efficiency Enhancement in Kraft Pulping Mills [Thèse de doctorat, École Polytechnique de Montréal]. PolyPublie. https://publications.polymtl.ca/1251/

Document en libre accès dans PolyPublie
Open Access document in PolyPublie

URL de PolyPublie: PolyPublie URL:	https://publications.polymtl.ca/1251/
Directeurs de recherche: Advisors:	Michel Perrier, & Jean Paris
Programme: Program:	Génie chimique

Ce fichier a été téléchargé à partir de PolyPublie, le dépôt institutionnel de Polytechnique Montréal
This file has been downloaded from PolyPublie, the institutional repository of Polytechnique Montréal

https://publications.polymtl.ca

UNIVERSITÉ DE MONTRÉAL

STEAM AND WATER COMBINED ANALYSIS, INTEGRATION, AND EFFICIENCY ENHANCEMENT IN KRAFT PULPING MILLS

MOHAMMAD JAVAD KESHTKAR
DÉPARTEMENT DE GÉNIE CHIMIQUE

ÉCOLE POLYTECHNIQUE DE MONTRÉAL

THÈSE PRÉSENTÉE EN VUE DE L'OBTENTION

DU DIPLÔME DE PHILOSOPHIAE DOCTOR

(GÉNIE CHIMIQUE)

OCTOBRE 2013

© Mohammad Javad Keshtkar, 2013.

UNIVERSITÉ DE MONTRÉAL

ÉCOLE POLYTECHNIQUE DE MONTRÉAL

Cette thèse intitulée:

STEAM AND WATER COMBINED ANALYSIS, INTEGRATION,
AND EFFICIENCY ENHANCEMENT IN KRAFT PULPING MILLS

présenté par : KESHTKAR Mohammad Javad

en vue de l'obtention du diplôme de : Philosophiae Doctor
a été dûment acceptée par le jury d'examen constitué de :

M. LEGROS Robert, Ph. D., président

M. PERRIER Michel, Ph. D., membre et directeur de recherche

M. PARIS Jean, Ph. D., membre et codirecteur de recherche

M. TAVARES Jason-Robert, Ph. D., membre

M. AHTILA Pekka Kullervo, D. Sc., membre

DEDICATION

To my beloved parents, my brothers and sisters,

and my lovely wife, Samin

ACKNOWLEDGEMENTS

I would like to express my acknowledgments to my co-supervisor, Professor Jean Paris for his support and guidance during these years, for all the suggestions and advices that have derived in the accomplishment of this thesis. You are an inspiration of hardwork and dedication. I would like to convey my gratitude to my supervisor, Professor Michel Perrier, for his support and advices. It had been a true privilege to learn from such competent and sincere supervisors.

I would like to thank Dr. Maryam Moshkelani, Dr. Enrique Mateos-Espejel, Dr. Luciana Savulescu, and Walid Kamal for their support at the beginning of this project.

I like to extent my thanks to the entire technical and administrative staff of the Department of Chemical Engineering in Ecole Polytechnique Montreal. I would like to acknowledge financial support from the Natural Sciences and Engineering Research Council of Canada. The industrial partners of this project and, more particularly, the mills that supplied the data are gratefully acknowledged.

I would also like to send a heartfelt acknowledgment to my friends who made all these years vey joyful with interesting, intellectual and creative ideas. Kazem, Masood, Moye, Hilda, Adriano, Salomeh, Byan, Jawad, Mahsta, Shadi, Youssef, Shahrouz, Leila, Morad, Hamed, Shabnam, Banafshe, Behrang, Tatiana,,...

I would like to thank all co-workers that have been part of our research group during these years, to Mariya, Miyuru, Radia, Aurore, Islem, Pardis,...

I would like to thank my parents, my brothers and sisters for all the love, support, trust, and guidance. They are the driving force behind all of my successes. To them I tribute a fervent thanks.

Samin, we started our journey 3 years ago. These 3 years were the happiest time I've had so far. However, there have been rough times, you have always supported me. I will never stop loving you for the wonderful person you are.

RÉSUMÉ

Les principaux objectifs de cette thèse sont divisés en deux parties principales. Le premier objectif est de développer de nouvelles techniques d'intégration des procédés (IP) pour améliorer individuellement l'efficacité des systèmes d'eau et de vapeur, la performance des équipements, et le réseau d'échangeurs de chaleur (HEX) d'un procédé existant. Ces techniques sont validées en les appliquant au procédé Kraft. Le deuxième objectif est de développer une méthodologie d'amélioration de l'efficacité énergétique et de la consommation d'eau (SWAEI : *Steam Water Analysis Enhancement Integration*) d'un procédé en combinant les nouvelles techniques d'IP. Les études de cas sont établis pour trois usines Kraft opérant au Canada (usines A, B, et C) avec un large spectre de la répartition géographique, des produits et des matières premières. Des modèles de simulation de chacune des trois usines ont été développés sur la plate-forme CADSIM Plus et sont utilisés pour fournir des données pour l'analyse et intégrer les modifications proposées.

Les usines de pâte et papier kraft constituent des importants utilisateurs d'eau et d'énergie thermique dans le secteur industriel canadien. Il y existe une forte interaction entre les systèmes de vapeur et d'eau. Pour diminuer les coûts de fabrication et accroître la rentabilité, il est nécessaire de réduire la consommation d'énergie et d'eau ainsi que les coûts de traitement des eaux usées.

Avant de passer à l'étape de développement de nouvelles techniques d'IP et de la méthodologie SWAEI, une étape préalable est l'analyse comparative (*benchmarking*) pour donner un aperçu sur la consommation de vapeur et la performance du système d'eau. La mise au point d'une technique d'analyse comparative a permis de caractériser chaque étude de cas (i.e. les trois usines kraft) en termes de consommation d'eau et d'énergie. Dans cette technique, la consommation de vapeur et d'eau des usines sont étalonnées par rapport aux données de référence. Les trois cas sont comparés en termes d'eau et d'allocations de vapeur pour différents usages et aussi en termes des réseaux d'échangeur de chaleur de manière à souligner les similarités et les différences. Les potentiels d'économies d'eau et de vapeur sont résumés dans l'étape de synthèse. Les caractéristiques avantageuses d'une usine donnée sont utilisées pour

proposer des mesures de diminution de la consommation de vapeur et de l'eau pour une autre usine et vice versa.

La première technique d'intégration développée est l'analyse simultanée des réseaux énergétiques et d'eau (SEWNA : *Simultaneous Energy Water Network Analysis*) qui se déroule en cinq étapes pour économiser la vapeur et l'eau en même temps. Une nouvelle approche pour identifier le volume de contrôle pour l'extraction des données est développée. Inévitablement, des effluents doivent être soutirés pour éviter l'accumulation de produits chimiques et de particules indésirables. Dans la ligne de traitement, le potentiel d'économie de vapeur est déterminé en tenant compte des contraintes existantes pour l'utilisation de l'eau et de filtrats. De nouvelles règles pour la réutilisation de filtrat sont présentées. La nouvelle d'analyse de l'utilisation de l'énergie et de l'eau peut être réalisée sous forme de tableau ou graphique pour identifier les mesures de réduction d'eau et de vapeur. La nouvelle représentation graphique des courbes de pincement de l'énergie et de l'eau est constituée des concentrations des contaminants et des courbes de température en fonction du débit pour tous les puits et les sources. L'eau économisée est systématiquement enlevée de la source d'origine du réseau de production d'eau chaude et tiède. Ceci élimine la consommation de vapeur pour la production d'eau chaude / eau tiède et fournit également l'eau plus chaude au réseau HEX existant. Enfin, une analyse économique est effectuée afin de calculer le coût de la tuyauterie pour les nouvelles connexions de réutilisation de l'eau. La méthode SEWNA a été appliquée sur les trois usines de pâte kraft et a permis d'estimer des économies importantes de vapeur et d'eau avec un retour sur investissement relativement court. Le total des économies d'eau et de vapeur de l'ordre de 24 à 54 % et 11 à 29 % respectivement, ont été obtenus par de simples modifications de tuyauterie.

La seconde technique d'intégration des procédés développée est l'analyse de la performance des équipements (EPA : *Equipment Performance Analysis*). Elle permet la caractérisation, l'analyse et le diagnostic des équipements individuels ou des départements d'une usine du point de vue de la consommation de vapeur et d'eau. L'indicateur de performance clé (KPI : *Key Performance Indicator*) pour l'efficacité énergétique et / ou de la consommation d'eau de l'équipement ou d'un service est calculé et comparé à des données de référence. Les causes et les solutions probables sont établies pour les inefficacités. Cette technique a été appliquée à l'usine C. Sur la base des projets correctifs envisagés, la production de vapeur dans les chaudières peut être augmentée de

21% et également la consommation de vapeur et d'eau peuvent être réduites par 9% et 11 % respectivement. Les résultats obtenus de cette technique pourraient être une incitation pour évaluer en profondeur la performance des équipements sur site en entier.

La troisième nouvelle technique d'intégration des procédés est la rétro-installation de la conception du réseau HEN (*Retrofit* - HEN) et se compose de quatre étapes successives. Les contraintes physiques et d'opération du procédé, notamment sur les températures des opérations unitaires les plus sensibles sont analysées. Une cible réaliste pour l'économie de vapeur est établie en fonction des contraintes et la classification des utilisateurs de vapeur. Les courants existants des échangeurs de chaleur sont évalués pour être utilisé plus efficacement dans le nouveau réseau. Pour utiliser plus efficacement la chaleur perdue, les courants sont classés comme hautement et faiblement corrosifs. Le HEN proposé est conçu en utilisant un nouvel algorithme en fonction de cinq heuristiques et règles pratiques. La technique a été appliquée sur le moulin C et une économie totale de vapeur de 38% a été obtenue.

La méthodologie globale SWAEI (*Steam Water Analysis Enhancement Integration*) consiste en six étapes successives. Dans la première étape, le modèle de simulation du scénario de base est développé. Dans la deuxième étape, un pré-étalonnage (*pre-benchmarking*) est effectué en comparant la consommation de vapeur et d'eau avec des données de référence. Le coeur de la méthodologie est l'identification des projets d'amélioration de l'énergie et de l'eau en appliquant séquentiellement les techniques SEWNA, EPA et R- HEN. L'application séquentielle de ces techniques conduit à des résultats beaucoup plus grands d'économie de vapeur que si elles avaient été appliquées individuellement. Cette application séquentielle conduit à des projets complémentaires pour maximiser les économies de vapeur. L'excès de vapeur estimé peut être utilisé pour réduire ou éliminer la consommation de combustibles fossiles. Le reste de la vapeur en excès pourrait être vendue dans la communauté, produire de l'électricité en utilisant la cogénération ou une combinaison de cogénération et d'un système pompe à chaleur à absorption (tri-génération). Ces solutions de rechange pour l'utilisation de la vapeur en excès sont examinées du point de vue économique pour choisir la plus prometteuse pour la mise en œuvre. Dans la cinquième étape, les projets identifiés sont priorisés et une stratégie de mise en œuvre en deux phases est proposée. Dans la première phase, il est proposé de mettre en œuvre les projets qui conduisent à la réduction des combustibles fossiles ou de leur élimination. Les autres projets

proposés sont à mettre en œuvre dans la deuxième phase afin d’économiser plus de vapeur pour la vente ou la production d'électricité. Enfin la sixième et dernière étape consiste en une post-analyse comparative menée afin de visualiser les zones d'amélioration. La méthodologie a été appliquée sur les trois usines et a donné 27, 33, et 66 % d'économies de vapeur et 38, 24, et 58 % pour les économies d'eau des usines A, B, et C respectivement.

ABSTRACT

The principle objectives of this thesis are divided into two main parts. The first key objective is to develop new process integration (PI) techniques to individually improve the efficiency of water and steam systems, the performance of equipment, and the heat exchanger (HEX) network of the existing water-based process. These techniques are validated by applying them to the Kraft process. The second objective is to develop a steam and water analysis enhancement and integration (SWAEI) methodology to improve the energy and water efficiency of a water-based process by combining the new PI techniques. The case studies are three Canadian Kraft mills (mills A, B, and C) with a broad spectrum of geographic distribution, products, and raw materials. A simulation of the three mills has been developed in the Cadsim Plus platform and is used to provide data for analysis and incorporate proposed modifications.

The Kraft pulp and paper (P&P) mill is one of the major water and thermal energy users in the Canadian industrial sectors. It is also one of the water-based processes where there is large interaction between water and steam systems. To decrease manufacturing costs and increase profitability, it is necessary to reduce energy, water, and wastewater treatment costs.

Before going through the development of new PI techniques and SWAEI methodology, a prerequisite step is benchmarking to give actual insights about current steam and water performance. A benchmarking technique characterizes the case studies (three Kraft mills) in terms of water and energy consumption. In this technique, the steam and water consumption of the mills are benchmarked against reference data. The cases are compared in terms of water and steam allocations for different uses and also in terms of the heat exchanger and water networks so as to indicate the similarities and differences. The potential for steam and water savings are summarized in the synthesis step. The advantageous characteristics of one case are used to propose the steam and water saving measures for another case and vise versa.

The first developed PI technique is simultaneous energy and water networks analysis (SEWNA) that involves five steps to save steam and water at the same time. A new approach to identify the control volume for data extraction is shown. Inevitable effluents from the source pool are subtracted to prevent accumulation of chemicals and unwanted particles. In the process line, the potential for steam saving is determined considering the existing process constraints for water

utilization and filtrate reutilization. The new rules for filtrate reutilization are presented. The new water and energy analysis can be performed either in tabular or graphical form to identify the water measures with respect to steam reduction. The new graphical Water and Energy Pinch Curves consist of contaminant concentration and temperature curves versus flowrate for all sinks and sources. The saved water is reduced systematically from the origin source of the hot and warm water production network. This eliminates steam consumption for hot/warm water production and also provides hotter and warmer water using the existing HEX network. Finally, the economic analysis is conducted to calculate the piping cost for new water reutilization connections. SEWNA has been applied on the three Kraft mills and resulted in significant water and steam savings with a reasonably short payback period. The total water and steam savings in the range of 24-54% and 11-29%, respectively, have been achieved by simple piping.

The second developed PI technique is equipment performance analysis (EPA). It characterizes, analyzes, and diagnoses individual equipment or departments from the standpoint of steam and water consumption. The key performance indicator (KPI) for energy and/or water efficiency of equipment or a department is calculated and benchmarked against reference data. Probable causes and solutions are determined for inefficiencies. This technique has been applied to mill C. Based on probable remedial projects for improvement, the steam generation at the boilers can be increased by 21% and also steam and water can be saved by 9% and 11%, respectively. The results of this technique could be an incentive for in-depth and on-site performance analysis.

The third new PI technique is the retrofit HEX network design (R-HEN) for a water-based process that consists of four successive steps. The physical and process constraints including hard and soft temperature of sensitive unit operations are analyzed. A realistic targeting for steam saving is conducted based on the constraints and the classification of steam users. The existing process stream HEXs are assessed to be used effectively in the new network. To utilize efficiently the heat of waste streams, they are categorized as high and low corrosive. The retrofit HEN is designed using a new algorithm according to five heuristic and practical rules. The technique has been applied on mill C. The total steam saving of 38% has been accomplished.

The steam and water analysis enhancement and integration (SWAEI) methodology consists of six successive steps. In the first step, the simulation model of the base case is developed. In the

second step, pre-benchmarking is carried out by comparing the steam and water consumption with reference data. The core of methodology is the identification of the energy and water improvement projects by sequentially applying SEWNA, EPA, and R-HEN. Sequential application of these techniques results in significantly more steam saving than if they would have been applied individually. This sequential application leads to complementary projects to maximize steam saving. The excess steam is used to reduce or eliminate fossil fuel consumption. The remainder of excess steam could be sold to the local district, generate electricity using cogeneration or a combination of cogeneration and an absorption heat pump (trigeneration) system. These alternatives for using the remainder of excess steam are examined from the economical perspective to choose the most promising one for implementation. In step five, the identified projects are prioritized and the implementation strategy is proposed in two phases. In phase one, it is proposed to implement the projects that lead to fossil fuel reduction or elimination. The other projects are proposed to be implemented in the second phase to save more steam for selling or generating electricity. Finally, the post-benchmarking is conducted to visualize areas of improvement. The methodology has been applied on three mills and yielded 27, 33, and 66% steam savings and 38, 24, and 58% water savings for mills A, B, and C, respectively.

CONDENSÉ EN FRANÇAIS

Les procédés à base d'eau, comme la production de sucre, de pâtes et papiers (P & P), et de la bière, sont des procédés dans lesquels l'eau est le principal moyen pour véhiculer la masse, le momentum et l'énergie. Dans ces procédés, l'eau est utilisée à différentes fins, par exemple comme milieu de réaction, comme solvant dans certains procédés d'extraction, comme un agent de lavage et bien d'autres applications. L'énergie thermique (vapeur d'eau) et les systèmes d'eau dans de tels procédés sont fortement liés entre eux et interagissent les uns avec les autres. Ces procédés font face à plusieurs contraintes, telles que la compétitivité mondiale, la demande du public pour des produits durables et des règlements environnementaux stricts. Une façon de demeurer compétitif est de diminuer le coût de fabrication en réduisant le coût de la consommation d'énergie et d'eau ainsi que le traitement des eaux usées. En outre, dans ces procédés, puisque l'électricité est utilisée pour actionner les pompes, une augmentation de la consommation d'eau et de la production d'effluents, entraînent une plus grande consommation d'électricité. Par conséquent, les principales incitations pour les programmes de conservation de l'énergie et de l'eau sont de réduire les coûts de fabrication, les émissions de CO_2, et les eaux usées rejetées à l'environnement.

Un très bon exemple de représentation de procédés impliquant de grandes quantités d'eau et de vapeur est celui de la production de pâte et du papier (P & P). Ces procédés se caractérisent comme l'un des grands consommateurs d'énergie et se classent en quatrième place des plus gros consommateurs d'énergie entre les différents secteurs d'activité industrielle (Chen et al., 2012; Persson and Berntsson, 2009). L'eau est également largement utilisée dans les procédés P & P comme une utilité, comme de la vapeur ou un agent de transfert de masse, tel que le lavage, la dilution de la pâte, le nettoyage, le refroidissement des pompes, et plusieurs autres (Bryant et al., 1996). Ces hautes consommations d'eau et d'énergie augmentent le coût du produit final. La hausse des coûts, la concurrence mondiale croissante, et la baisse de la demande de pâte (RISI, 2010) conduisent à la fermeture des usines non rentables dans les zones en région où les usines sont souvent situées. Afin que l'industrie puisse soutenir son avantage concurrentiel sur le marché, elle doit réduire ses coûts de fabrication et, en particulier, ses coûts énergétiques, qui sont estimés à typiquement 30% (Mateos-Espejel et al., 2011c) du total des coûts de fabrication.

La bioraffinerie forestière consiste en la conversion de la biomasse vers un large spectre de produits par diverses voies d'extraction et de transformation. Le concept d'intégration d'une bioraffinerie dans une usine de pâte kraft existante offre l'opportunité à l'industrie papetière d'augmenter sa rentabilité, d'améliorer le développement durable, et de rester compétitif en produisant des produits à haute valeur ajoutée, tels que biocarburants, produits chimiques, polymères et produits pharmaceutiques (Mabee et al., 2005; Thorp, 2005). Il est prévu que la plupart des usines intègrent une bioraffinerie dans les limites des spécifications actuelles. Cependant, cette intégration peut imposer des exigences supplémentaires sur le système des utilités et une augmentation des coûts d'exploitation (par exemple, une capacité supplémentaire pour le traitement des eaux usées) (CETC, 2003). Ainsi, les usines de pâte kraft devraient être auto-suffisantes en termes d'énergie qui puisse être fournie à la bioraffinerie. Pour ces raisons, l'industrie des P & P doit concentrer ses efforts sur l'amélioration de l'efficacité énergétique et, par la suite, la réduction de la consommation d'énergie thermique et les émissions de gaz.

• ***Analyse comparative (Benchmarking)***

L'étape préalable pour déterminer le potentiel d'économie d'énergie et d'eau est l'analyse comparative (Mateos-Espejel et al., 2011d). Une étude comparative est une comparaison d'une usine du point de vue de la consommation d'énergie et d'eau avec des usines concurrentes. Les résultats de cette étude sont la force motrice de mise au point de stratégies d'économies d'énergie et d'eau (CIPEC, 2008; Francis et al., 2006).

Une technique d'analyse comparative a été développée pour diagnostiquer l'inefficacité des systèmes de vapeur et d'eau et identifier de façon préliminaire le potentiel d'amélioration de l'efficacité énergétique et de l'eau. Cette technique consiste en trois étapes ; analyse comparative avec la pratique actuelle, la comparaison de trois usines Kraft, et la synthèse. La consommation de vapeur et d'eau des usines ont été comparées aux données de référence. Cette analyse a été menée sur trois usines canadiennes Les trois usines ont ensuite été comparées en termes d'eau et d'allocations de vapeur pour différents usages et aussi en termes des réseaux d'échangeur de chaleur et d'eau pour donner une indication des similitudes et des différences. Les caractéristiques avantageuses d'une usine donnée peuvent être utilisées pour proposer des mesures d'économie de vapeur et d'eau pour une autre. Pour avoir des résultats plus précis, la

comparaison avec plus de cas est recommandée. Enfin, le potentiel d'économies d'eau et de vapeur est résumé dans l'étape de synthèse.

Les résultats ont montré peu pour l'usine A, l' eau peut être réduite au lavage, à la machine à pâte, et à la recaustification. Pour les deux lignes de l'usine B, l'eau peut être réduite à la machine de la pâte et à la recaustification et pour la ligne 2, le lavage et la vapeur ont un potentiel d'économie d'eau. Les principales sections dans laquelle l'eau peut être réduite pour l'usine C sont le lavage et la mise en pâte mécanique. Pour toutes les usines, l'amélioration du réseau d'échangeurs de chaleur pour l'eau et l'air peut entraîner une diminution ou l'élimination de la consommation de vapeur pour produire de l'eau chaude et de l'air chaud pour les sections hors-procédé. En outre, en plus de l'amélioration du système de récupération de la chaleur et d'eau à température plus élevée à la ligne du procédé et du dégazeur, la consommation de vapeur peut être réduite de manière significative.

• ***Analyse simultanée des réseaux énergétiques et d'eau (SEWNA : Simultaneous Energy and Water Networks Analysis)***

La technique de PI la plus commune qui a été utilisé pour l'amélioration de l'efficacité du réseau d'eau est l'analyse de pincement massique de l'eau. Les analyses de pincement massique de l'eau sont des techniques graphiques qui ont été construites de manière analogue à l'analyse de pincement thermique (Dhole, 1998; Dhole et al., 1996; El-Halwagi et al., 2003; Wang and Smith, 1994). Avec la hausse du coût des combustibles fossiles et de l'énergie en général, la conservation de l'eau et de l'énergie doit être réalisée simultanément afin d'assurer la durabilité et réduire les coûts de production. Il y a eu plusieurs tentatives pour intégrer les analyses de l'énergie et de l'eau (Feng et al., 2008; Leewongtanawit and Kim, 2009; Manan et al., 2009; Savulescu et al., 2005b; Wan Alwi et al., 2011). Néanmoins, l'analyse de la configuration existante pour la production d'eau chaude et chaude a été négligée, les contraintes physiques et du procédé n'ayant pas été examinées attentivement. La plupart des procédés à base d'eau nécessitent de l'eau non seulement en grande quantité et pureté, mais aussi avec une température élevée (Cortés et al., 2011; Feng et al., 2009). En termes de température de l'approvisionnement en eau pour différentes demandes, la température de l'eau et du filtrat acceptables, doit être analysée avec soin et pas seulement en fonction des températures fixes d'alimentation comme

une limitation pour la réutilisation du filtrat et l'utilisation de l'eau chaude ou tiède. La plupart des techniques utilisées pour les cas génériques ont été en fait adaptées pour des problèmes de petite taille. La qualité des données utilisées est l'un des défis majeurs pour l'analyse de l'eau. La température acceptable et les concentrations de contaminants doivent être atteints par une approche systématique. Chaque ensemble de données devrait tenir compte des caractéristiques de chaque type de procédés, par exemple, la concentration de contaminant acceptable pour les puits d'une usine de pâte kraft ne peut pas être utilisée pour une autre usine parce que chacune possède ses propres caractéristiques. En ce sens, des directives systématiques pour extraire les données pour l'analyse de l'eau devraient aussi être développées.

L’analyse simultanée des réseaux énergétiques et d’eau (*SEWNA*) a été développée dans ce travail pour permettre la résolution des problèmes mentionnés ci-dessus. Un exemple générique a été utilisé pour illustrer les cinq étapes de la technique. Dans la première étape, une nouvelle approche est démontrée pour identifier le volume de contrôle pour l'extraction des données. Les données requises comprennent les débits, les concentrations de contaminants et la température de tous les puits de même que les sources et les niveaux de concentration des contaminants acceptables pour chaque puits. Les critères pour soustraire systématiquement les effluents inévitables des sources sont présentés. Dans la deuxième étape, le potentiel d'économie de vapeur dans la ligne du procédé est déterminé et les contraintes de réutilisation et de consommation d'eau sont évaluées. Dans la troisième étape, plusieurs principes et règles heuristiques ont été établis pour la réutilisation de l'eau. La nouvelle analyse de l'énergie et de l’eau a été développée et peut être effectuée sous forme de tableau ou graphique pour identifier les mesures de l'eau en ce qui concerne la réduction de la vapeur. Les nouvelles courbes de pincement Eau-Énergie graphique et courbes de pincement de l'énergie sont constituées des concentrations de contaminants et des courbes de température en fonction du débit pour tous les puits et les sources. Dans la quatrième étape, le réseau d'eau très chaude et chaude est analysé afin de réduire la consommation d'eau enregistré à partir des sources d'origine. Les objectifs sont d'éliminer la consommation de vapeur pour la production d'eau très chaude et chaude et d'identifier les nouveaux niveaux de température de l'eau sur la base des courants existants des échangeurs de chaleur du procédé. Enfin, une analyse économique est menée afin de calculer le coût de la tuyauterie pour les nouvelles connexions de réutilisation de l'eau.

SEWNA a été appliquée dans trois usines canadiennes Kraft. Des économies substantielles d'économie de vapeur et d'eau dans l'intervalle de 11-29 % et 24-54 % respectivement ont été évaluées par de simples changements de conduites. L'utilisation de cette méthode montre donc que les consommations d'eau et de vapeur peuvent être considérablement réduites. Les résultats ont également confirmé que la réutilisation de l'eau peut être améliorée. La période de retour sur investissement pour chacun des trois cas est court.

• ***Analyse de la performance des équipements (EPA : Equipment Performance Analysis)***

Les techniques d'intégration des procédés sont fréquemment appliquées avec l'hypothèse que tous les équipements et les services fonctionnent efficacement, mais ce n'est évidemment pas toujours le cas. Par conséquent, la performance d'une pièce d'équipement ou d'un section en termes d'eau et d'efficacité énergétique doit être soigneusement évaluée.

La technique d'analyse de performances des équipements (*EPA*) a été développée pour exécuter efficacement cette tâche. La performance des équipements individuels et de sections d'usine a été évaluée et analysée pour diagnostiquer les inefficacités thermiques et de l'eau dans les différents procédés. Les causes et les solutions probables ont été identifiées pour caractériser et possiblement éliminer les inefficacités.

La technique EPA a été appliquée à l'usine C et neuf projets d'amélioration probables ont été proposés pour améliorer la performance des équipements et des services. La production de vapeur dans les chaudières peut augmenter de 21% par rapport à la consommation de vapeur actuelle de l'usine tandis que l'économie de vapeur globale peut être de 9 % de la consommation actuelle de vapeur. L'économie totale d'eau et la réduction de la production d'effluents peuvent aller jusqu'à 11% et 7 % de la consommation actuelle de l'eau et la production d'effluents, respectivement. Les résultats de cette technique pourraient être un incitatif pour une analyse en profondeur et de la performance des équipements sur tout le site.

• ***Rétro-installation de la conception du réseau HEX (R-HEN Retrofitting – Heat Exchanger Network)***

La technique la plus courante de d'intégration de procédés (PI) qui a été largement utilisée dans différents secteurs pour améliorer l'efficacité énergétique est l'analyse de pincement thermique. L'analyse par pincement est le principal outil pour la rétro-installation de la conception du réseau d'échangeurs de chaleur (HEX). Néanmoins, elle ne permet pas d'étudier en profondeur les interactions entre l'énergie et l'eau dans les procédés. De plus, il existe plusieurs contraintes dans le procédé qui peuvent causer des difficultés pour améliorer les économies de vapeur. Ces contraintes sont divisés en deux catégories : les contraintes physiques et les contraintes de procédés. Ainsi, l'identification et l'analyse de ces contraintes constituent une tâche essentielle avant d'entreprendre tout effort visant à moderniser la conception du réseau HEX (HEN) de conception afin qu'il soit proche de l'optimum. L'analyse par pincement fournit les informations cibles, comme l'exigence de chauffage minimum (Minimum Heating Requirement) et l'exigence de refroidissement minimum (Minimum Cooling Requirement), et nécessite un effort significatif pour l'extraction des données, l'analyse des données, et la construction des courbes composites. En outre, la cible MHR pour les procédés à base d'eau n'est pas toujours réaliste et est parfois loin de ce qui peut être réalisé dans la pratique. Par exemple, Mateos et al. (2011c) estime une économie de vapeur de 29 % en utilisant des courbes de pincement pour une usine de pâte kraft, mais l'économie de vapeur finale qui a été réalisée était de 13%, ce qui est moins de la moitié de l'estimation. Cette différence est principalement due aux contraintes physiques et du procédé et aussi par le fait que toutes les règles de pincement pour la rétro-installation de la conception du HEN n'ont pas pu être respectées. En d'autres mots, les règles de pincement ne peuvent pas répondre à toutes les caractéristiques spécifiques de conception d'un HEN. Puisque la rétro-installation de la conception d'un HEN nécessite beaucoup d'efforts et de temps, le ciblage approprié des économies d'énergie est important. En outre, les points de mélange non - isotherme (Non Isothermal Mixing) devraient être considérés à la conception du HEN, cependant, dans l'analyse par pincement ils ne sont pas pris en compte. Les règles de pincement de la conception du HEN ne sont pas suffisantes et de nouvelles règles et des directives pratiques sont nécessaires. Par conséquent, une nouvelle technique (R-HEN) a été développée pour surmonter ces difficultés.

La technique de rétro-installation de la conception du réseau HEX (R- HEN) qui a été développée se compose de quatre étapes successives. Dans les deux premières étapes, semblables à l'étape 2 de SEWNA, les contraintes physiques et du procédé, notamment les contraintes de température dures et molles des opérations unitaires les plus sensibles sont analysées. Une nouvelle approche a été développée pour offrir un ciblage réaliste pour l'économie de vapeur en fonction des contraintes et de la classification des utilisateurs de vapeur. Les courants existants des HEX du procédé sont évalués. Les courants de rejets ont été classés selon le niveau de corrosion haute et basse pour exploiter efficacement leur niveau d'échange thermique. Un nouvel algorithme a été développé pour la rétro-installation de la conception du HEN basée sur l'estimation-correction. Le HEN est conçu selon cinq heuristiques et règles pratiques.

La technique R- HEN a été appliquée sur l'usine C. Les résultats ont montré qu'une surface additionnelle de 9850 m^2 pour les HEX est requise pour réaliser une économie de 42,1 MW (38%) de la vapeur. Cette technique a également été comparée avec l'analyse par pincement. Les résultats ont montré un ciblage plus précis et une plus grande économie de vapeur par R- HEN en comparaison de l'analyse par pincement.

• ***Conversion de l'énergie et valorisation (upgrading)***

L'industrie des P & P est considérée comme ayant la plus grande capacité de cogénération industrielle au Canada. Cependant, il y a encore un potentiel additionnel de production d'électricité si la consommation totale de vapeur diminue (CIPEC, 2008; Mateos-Espejel et al., 2010d). Les pompes à chaleur constituent d'autres outils d'intégration des procédés pour récupérer davantage de chaleur et de vapeur par récupération de chaleur de bas niveau. Ces dispositifs sont installés pour améliorer la chaleur à faible potentiel à basse température à des températures élevées à haut potentiel et économiser davantage de vapeur (Bakhtiari et al., 2010a, b; Costa et al., 2009; Costa et al., 2004). La tri-génération est une combinaison de la cogénération et d'une pompe à chaleur. Il a été évalué que la tri-génération peut réduire la demande de chaleur nette du procédé et fournir de l'électricité au réseau (Marinova et al., 2007). Néanmoins, l'investissement nécessaire pour cette combinaison est élevé et doit être soigneusement examiné pour déterminer s'il est rentable ou non.

• Analyse de l'amélioration de la vapeur et d'eau et intégration (SWAEI : Simultaneous Water Analysis Enhancement and Integration)

Mateos et al. (2010d, 2011c) ont développé l'analyse de l'interaction de systèmes qui se compose de six étapes principales : la récupération de chaleur interne, la réutilisation de l'eau, l'élimination de points de mélange non-isotherme, la récupération des condensats, l'énergie valorisée par une pompe à chaleur, et la conversion d'énergie par turbine. Ils ont utilisé différents outils d'intégration des procédés tels que l'analyse de pincement thermique pour la récupération de la chaleur interne et la valorisation de l'énergie, et de l'analyse par pincement massique de l'eau pour la réutilisation de l'eau L'analyse de pincement thermique a été effectuée après l'application de chaque étape pour évaluer l'effet sur les courbes de pincement et la conception du réseau HEX. Cette méthode exige beaucoup d'efforts pour développer le réseau HEX. Cependant, de nombreuses mesures peuvent être facilement combinées. Par exemple, la réutilisation de l'eau, la récupération des condensats, et une partie de l'élimination de points de mélange NIM, et la récupération de chaleur interne ont été obtenues en appliquant la méthode SEWNA. L'élimination des points de mélange NIM restants et la récupération de chaleur interne ont également été réalisées par R - HEN. Mateos et al. (2011c) a également présenté une méthodologie unifiée pour proposer des lignes directrices pour mettre en œuvre les projets identifiés pour une usine Kraft Canada compte tenu de leurs contraintes techniques et économiques.

La méthodologie d'analyse de l'amélioration de la vapeur et d'eau et intégration (SWAEI) a été développée pour combiner différentes techniques d'intégration des procédés pour atteindre le deuxième objectif principal de cette thèse. La méthodologie consiste en six étapes successives. Dans la première étape, le modèle de simulation du cas de base est développé et utilisé en tant que source de données pour les analyses. Dans la deuxième étape, une pré-analyse comparative est menée afin de déterminer les zones d'inefficacité. Le coeur de la méthodologie est l'identification des projets d'amélioration de la consommation d'énergie et d'eau en appliquant séquentiellement SEWNA, l'EPA et R-HEN. L'application séquentielle de ces techniques a conduit à des résultats nettement supérieurs d'économie de vapeur que si elles auraient été appliquées individuellement. Cette application séquentielle permet de proposer sur des projets complémentaires pour maximiser les économies de vapeur. Dans la quatrième étape, la vapeur en

excès est utilisée pour réduire ou éliminer la consommation d'énergie fossile. Le reste de la vapeur en excès pourrait être vendu ou utilisé pour produire de l'électricité par cogénération ou par un système de tri-génération. Les aspects économiques de ces alternatives sont évalués et l'aspect le plus prometteur est sélectionné pour la mise en œuvre. Dans la cinquième étape, les projets identifiés sont priorisés et la stratégie de mise en œuvre est proposée en deux phases. Dans la première phase, les projets menant d'abord à la réduction des combustibles fossiles ou à leur élimination sont appliqués, et lors de la deuxième phase, les autres projets pouvant être mis en œuvre pour économiser plus de vapeur. Enfin, la post-évaluation comparative est effectuée pour identifier les zones qui ont été améliorées de façon significative en termes d'économies de vapeur et d'eau.

La méthodologie SWAEI a été appliquée sur les trois usines canadiennes Kraft et a permis d'estimer des réductions de 27-66 % de vapeur d'eau et de 24-58 % pour l'eau. La stratégie de mise en œuvre prévoit la planification pour obtenir un procédé consommant beaucoup moins de vapeur, d'eau, de combustibles fossiles, et avec un impact environnemental moins négatif par de plus faibles émissions de CO_2 et moins d'eaux usées, conduisant à des produits plus écologiques et plus durables , et avec un bénéfice net finalement plus élevé. En appliquant la méthodologie SWAEI sur ces usines, les prépare comme des récepteurs optimisés au niveau énergétique pour l'intégration d'une bioraffinerie durable suite à une planification bien définie.

La méthode n'est pas spécifique à certains procédés à base d'eau. Cependant, chaque procédé possède ses propres caractéristiques et la définition des différentes contraintes doit être effectuée individuellement.

TABLE OF CONTENTS

DEDICATION iii
ACKNOWLEDGEMENTS iv
RÉSUMÉ v
ABSTRACT ix
CONDENSÉ EN FRANÇAIS xii
LIST OF TABLES xxvii
LIST OF FIGURES xxx
NOMENCLATURE xxxvi
LIST OF APPENDICES xxxviii
1 CHAPTER 1: INTRODUCTION 1
1.1 Justification of Project 1
1.2 Context of the project 4
1.3 General Objective 5
1.4 Structure and Organization 5
2 CHAPTER 2: WATER-BASED PROCESS AND KRAFT MILL 8
2.1 Water-based Process 8
2.2 Kraft Pulp and Paper Mill 8
2.2.1 Digesting 9
2.2.2 Washing 10
2.2.3 Bleaching and Chemical Preparation 10
2.2.4 Pulp/Paper Machine 11
2.2.5 Recovery loop 11
2.3 Current Status of Pulp &Paper 12
3 CHAPTER 3: LITERATURE REVIEW 14
3.1 Simulation 14
3.2 Benchmarking 14
3.3 Internal Heat Recovery 15
3.3.1 Pinch Analysis 15
3.3.2 Application of Pinch Analysis in P&P 17
3.3.3 Retrofit HEX network design and challenges 19
3.3.4 Synthesis of Internal Heat Recovery 21

3.4 Water Reutilization 22
3.4.1 Water Analysis 23
3.4.2 Water and energy analysis 27
3.4.3 Water and energy in non-isothermal mixing points 31
3.4.4 Water and energy in condensate recovery 32
3.4.5 Synthesis of water and energy analyses 32
3.4.6 Water reutilization in Pulp & Paper 34
3.5 Equipment Performance Analysis 36
3.6 Energy Upgrading 38
3.7 Energy Conversion 40
3.8 Trigeneration 41
3.9 Selling Steam to the Local District 42
3.10 Combination of Different Process Integration Techniques 43
3.11 Synthesis of the literature 43
3.12 Specific Objectives 44
3.13 Overall Methodology Approach 45
3.14 Case Studies 46
4 CHAPTER 4: BENCHMARKING AS A MEANS TO IDENTIFY WATER AND STEAM SAVINGS 50
4.1 Benchmarking Technique 50
4.1.1 Step 1: Benchmarking with current practices 51
4.1.2 Step 2: Comparison of case studies 51
4.1.3 Step 3: Synthesis 52
4.2 Results 52
4.2.1 Step 1: Benchmarking with current practices 52
4.2.2 Step 2: Comparison of case studies 58
4.2.3 Step 3: Synthesis 68
4.3 Conclusion 69
5 CHAPTER 5: SIMULTANEOUS ENERGY AND WATER NETWORKS ANALAYSIS 70
5.1 Part I: Development of simultaneous energy and water networks analysis 70
5.2 Case Study: Generic Example 72
5.3 Simultaneous Energy and Water Networks Analysis (SEWNA) 75
5.3.1 Principles 75

5.3.2 Structure 78
5.4 Conclusion of Part I 94
5.5 Part II: Application of simultaneous energy and water networks analysis (SEWNA) for Kraft processes 96
5.6 Results 96
5.6.1 Step 1: Data extraction 96
5.6.2 Step 2: Constraint analysis 101
5.6.3 Step 3: Water and energy analysis 102
5.6.4 Step 4: Hot and warm water network analysis 104
5.6.5 Step 5: Economic analysis 109
5.7 Summary of the Application in Two Other Canadian Kraft Mills (A and B) 111
5.7.1 Benchmarking of water and steam consumption 113
5.8 Conclusion 114
6 CHAPTER 6: EQUIPMENT PERFORMANCE ANALYSIS TECHNIQUE 116
6.1 Nomenclature of This Chapter 116
6.2 Equipment Performance Analysis Technique 116
6.2.1 Step 1: Identification 117
6.2.2 Step 2: Diagnosis 121
6.2.3 Step 3: Performance improvement 121
6.2.4 Step 4: Economic analysis 121
6.3 Results 122
6.3.1 Digesting department 122
6.3.2 Washing department 124
6.3.3 Bleaching and chemical preparation departments 126
6.3.4 Paper machine department 128
6.3.5 Evaporation department 129
6.3.6 Steam plant 129
6.3.7 Recausticizing department 135
6.3.8 Synthesis of the Performance Improvement Projects 136
6.3.9 Economic Analysis 138
6.4 Conclusion 140
7 CHAPTER 7: RETROFIT HEX NETWORK DESIGN TECHNIQUE 142

7.1 Retrofit HEX Network Design (R-HEN) 142
7.1.1 Step 1: Identification of saving potential 143
7.1.2 Step 2: Assessment of waste heat and existing HEXs 149
7.1.3 Step 3: HEX network design 150
7.1.4 Step 4: Economic analysis 155
7.2 Result 156
7.2.1 Step 1: Identification of saving potential 156
7.2.2 Step 2: Assessment of waste heat and existing HEXs 162
7.2.3 Step 3: HEX network design 165
7.2.4 Step 4: Economic analysis 175
7.3 Pinch Analysis 177
7.3.1 Results of Application of Pinch Analysis 177
7.4 Comparison of R-HEN with Pinch Analysis 182
7.5 Conclusion 185
8 CAHPTER 8: STEAM AND WATER ANALYSIS ENHANCEMENT AND INTEGRATION METHODOLOGY 187
8.1 Steam and Water Analysis Enhancement and Integration (SWAEI) Methodology 187
8.1.1 Step 1: Data Base and Process Simulation 188
8.1.2 Step 2: Benchmarking Current Performance 189
8.1.3 Step 3: Identification of Energy and Water Projects 190
8.1.4 Step 4: Energy Upgrading and Conversion 191
8.1.5 Step 5: Implementation Strategy 192
8.1.6 Step 6: Post-benchmarking 192
Results 192
8.2 Mill A 192
8.2.1 Step 2: Pre-benchmarking with current practice 192
8.2.2 Changes in Water Reutilization Network (Step 3-1: SEWNA) 194
8.2.3 Synthesis of the performance improvement projects (Step 3-2: EPA) 198
8.2.4 HEX network changes (Step 3-3: R-HEN) 198
8.2.5 Summary of improvements 203
8.2.6 Step 4: Energy Upgrading and Conversion 204
8.2.7 Economic analysis of the two alternatives 206
8.2.8 Step 5: Implementation strategy 207

8.2.9 Step 6: Post benchmarking 208
8.3 Mill B 209
8.3.1 Step 2: Pre-benchmarking with current practice 209
8.3.2 Changes in Water Reutilization Network (Step 3-1: SEWNA) 210
8.3.3 Synthesis of the performance improvement projects (Step 3-2: EPA) 218
8.3.4 HEX network changes (Step 3-3: R-HEN) 219
8.3.5 Summary of improvements 227
8.3.6 Step 4: Energy Upgrading, Conversion, and Selling Steam 228
8.3.7 Economic analysis of four alternatives 231
8.3.8 Step 5: Implementation strategy 232
8.3.9 Step 6: Post benchmarking 233
8.4 Mill C 233
8.4.1 Step 2: Pre-benchmarking with current practices 233
8.4.2 Changes in Water Reutilization Network (Step 3-1: SEWNA) 235
8.4.3 Synthesis of the performance improvement projects (Step 3-2: EPA) 240
8.4.4 HEX network changes (Step 3-3: R-HEN) 240
8.4.5 Summary of improvements 245
8.4.6 Step 4: Energy Upgrading and Conversion 246
8.4.7 Step 5: Implementation strategy 249
8.4.8 Step 6: Post benchmarking 250
8.4.9 Comparison of stand alone techniques and SWAEI methodology 251
8.5 Comparison of the Results of Three Kraft Mills 252
8.6 Sensitivity Analysis over Main Parameters of Selected Alternatives 254
8.6.1 Effects of summer condition 254
8.6.2 Effects of cost factors 255
8.7 Conclusion 257
GENERAL DISCUSSION 259
- Benchmarking Technique 259
- Simultaneous Energy and Water Networks Analysis (SEWNA) 259
- Equipment Performance Analysis (EPA) 260
- Retrofit HEX Network Design (R-HEN) 260

- Steam and Water Analysis Enhancement and Integration (SWAEI) Methodology 261

CONCLUSIONS AND RECOMMENDATIONS 262

- Original Contribution 264
- Recommendations for Future Research 265

REFERENCES 267

APPENDICES 280

LIST OF TABLES

Table 3-1 - Main characteristics of the three mills 48
Table 4-1 -Specific characteristics of HEX network of three mills 64
Table 4-2 – Specific characteristics of water network of three mills 66
Table 4-3 – Specific characteristics of water reuse in bleaching of three mills 68
Table 4-4 – Summary of potential for water saving in three mills 69
Table 4-5 – Summary of potential for steam saving in three mills 69
Table 5-1 – Main characteristics of generic example 75
Table 5-2 – Extracted data for all sinks in ascending order of contaminant concentration 80
Table 5-3 – Extracted data in ascending order of contaminant concentration for (a) overall sources, (b) inevitable effluents, and (c) final sources after excluding the inevitable effluents 80
Table 5-4 – Tabulated Water & Energy Pinch before identification of water projects for generic example (Fig. 5-2) 85
Table 5-5 - Tabulated Water & Energy Pinch after identification of water projects for generic example (Fig. 5-2) 86
Table 5-6 – (a) The final changes in flowrate of existing connections and (b) new connections 91
Table 5-7 – Total water and steam savings and effluent reduction for generic example (Fig. 5-2) 93
Table 5-8 – Capital cost for the piping of three new connections of generic example (Fig. 5-2b) 93
Table 5-9 – List of all sinks in ascending order of contaminant concentration 100
Table 5-10 – List of all sources in ascending order of contaminant concentration 101
Table 5-11 – List of all inevitable effluents 101
Table 5-12 – Acceptable temperature of filtrate and water to different types of washer 102
Table 5-13 – Existing area and current and final heat load of process and steam HEXs 107
Table 5-14 – Summary of steam saving at water network and steam injections in process line 108
Table 5-15 – List of new connections and the capital cost for purchasing, insulation, and installation of new pipes 110
Table 5-16 - The economic benefits of savings from different resources – Mill C 110
Table 6-1 – Summary of the performance improvement projects 137
Table 6-2 – Summary of capital investment and operating costs of the performance improvement projects 139
Table 6-3 - Economic analysis of process improvement projects at Kraft mill after the reduction of natural gas consumption 140
Table 7-1 - The overall heat transfer coefficient for different states 155
Table 7-2 – Acceptable temperature of water to different washers of the mill 158
Table 7-3 – The potential for steam reduction and final steam consumption after the HEX network design for all steam users of the mill 161
Table 7-4 – Targeting and final steam savings by means of R-HEN 162
Table 7-5 – Mixed Cp for exhaust air of dryer at different levels of humidity and temperature intervals (information extracted from work of (Söderman and Pettersson, 2003)) 163
Table 7-6 – Mixed Cp of 0.110 kg water/ kg dried air humidity of dryer exhaust air of the mill at different temperature intervals 163
Table 7-7 - The extracted data for HEX network design 170
Table 7-8 – New HEXs to be purchased and existing HEXs to be enlarged 176
Table 7-9 – The economic analysis of steam saving and new area required 176
Table 7-10 - The extracted data for Pinch Analysis 178
Table 7-11 – Comparison between R-HEN and Pinch Analysis from the approach perspective 183

Table 8-1 - The steam consumption of the current situation, after applying SEWNA, EPA and also the potential for steam reduction using R-HEN and final steam consumption after HEX network design for all steam users of the mill – Mill A 199
Table 8-2 - The aggregation of all types of steam users for the current situation after applying NSWEA and EPA plus the targeting and final steam saving by means of R-HEN – Mill A 200
Table 8-3 – Summary of improvements after applying SWAEI methodology – Mill A 203
Table 8-4 - The economic benefit of savings from different resources – Mill A 207
Table 8-5 - Strategy to implement Alt. 1 – Mill A 208
Table 8-6 - Summary of the performance improvement projects – Mill B 218
Table 8-7 - The steam consumption of current situation, after applying SEWNA, EPA and also the potential for steam reduction using R-HEN and final steam consumption after HEX network design for all steam users of the mill – Mill B, Line 1 220
Table 8-8 - The steam consumption of current situation, after applying SEWNA, EPA and also the potential for steam reduction using R-HEN and final steam consumption after HEX network design for all steam users of the mill – Mill B, Line 2 221
Table 8-9 - The aggregation of all types of steam users for current situation, after applying NSWEA and EPA and the targeting and final steam saving by means of R-HEN – Mill B 222
Table 8-10 - Summary of improvements applying three process integration techniques in sequence for Lines 1 and 2 and the whole mill – Mill B 228
Table 8-11 - The economic benefit of savings from different resources – Mill B 232
Table 8-12 - Strategy to implement Alt. 1 and 3 – Mill B 233
Table 8-13 – Summary of the performance improvement projects – Mill C 240
Table 8-14 – The steam consumption of current situation, after applying SEWNA, EPA and also the potential for steam reduction using R-HEN and final steam consumption after HEX network design for all steam users of the mill – Mill C 241
Table 8-15 – The aggregation of all types of steam users for the current situation, after applying NSWEA and EPA and the targeting and final of steam saving by means of R-HEN – Mill C 242
Table 8-16 – Summary of improvements applying three process integration techniques in sequence – Mill C 246
Table 8-17 –The economic benefit of savings from different resources – Mill C 249
Table 8-18 - Strategy to implement Alt. 1 250
Table 8-19 - Scenarios for sensitivity analysis over cost factors 255
Table 0-1 - Existing Water HEX network – Mill C (for Fig. 5-16) 280
Table 0-2 - Final Water HEX network- After Applying SEWNA – Mill C (for Fig. 5-16) 281
Table 0-3 - Existing HEX network – Mill C (for Fig. 7-14 and Fig. 7-15) 282
Table 0-4 - Final HEX network- After Applying R-HEN – Mill C (for Fig. 7-14 and Fig. 7-15) 283
Table 0-5 - (a) The new HEXs that should be purchased and (b) the existing HEXs that should be enlarged – After applying R- HEN - Mill C (for Fig. 7-14 and Fig. 7-15) 284
Table 0-6 - Existing HEX network – Mill C (for Fig. 7-17 and Fig. 7-18) 285
Table 0-7 - Final HEX network- After applying Pinch Analysis – Mill C (for Fig. 7-17 and Fig. 7-18) 286
Table 0-8 - (a) The new HEXs that should be purchased and (b) the existing HEXs that should be enlarged – After applying Pinch Analysis - Mill C (for Fig. 7-17 and Fig. 7-18) 287
Table 0-9 - The extracted data for HEX network design – Mill C (for Fig. 8-31 and Fig. 8-32) 289
Table 0-10 - Existing HEX network – Mill C (for Fig. 8-31 and Fig. 8-32) 290
Table 0-11 - Final HEX network – Mill C (for Fig. 8-31 and Fig. 8-32) 291

Table 0-12 - (a) The new HEXs that should be purchased and (b) the existing HEXs that should be enlarged – Mill C (for Fig. 8-31 and Fig. 8-32) 293
Table 0-13 - List of all sinks in ascending order of contaminant concentration – Mill A (for Fig. 8-4) 294
Table 0-14 - List of all sources in ascending order of contaminant concentration – Mill A (for Fig. 8-4) 294
Table 0-15 - List of all inevitable effluents – Mill A (for Fig. 8-4) 295
Table 0-16 - List of new connections and the capital cost for purchasing, insulation, and installation of new pipes – Mill A (for Fig. 8-5, Fig. 8-6, and Fig. 8-7) 295
Table 0-17 – Mixed Cp of 0.163 kg water/ kg dried air humidity of dryer #1 and 0.127 kg water/ kg dried air humidity of dryer #2 exhaust air of the mill at different temperature intervals – Mill A (for Fig. 8-8 and Fig. 8-9) 296
Table 0-18 - The extracted data for HEX network design – Mill A (for Fig. 8-8 and Fig. 8-9) 296
Table 0-19 - Existing HEX network – Mill A (for Fig. 8-8 and Fig. 8-9) 297
Table 0-20 - Final HEX network – Mill A (for Fig. 8-8 and Fig. 8-9) 298
Table 0-21 - (a) The new HEXs that should be purchased and (b) the existing HEXs that should be enlarged – Mill A (for Fig. 8-8 and Fig. 8-9) 300
Table 0-22 - List of all sinks in ascending order of contaminant concentration – Mill B, Line 1 (for Fig. 8-13) 301
Table 0-23 - List of all sources in ascending order of contaminant concentration – Mill B, Line 1 (for Fig. 8-13) 301
Table 0-24 - List of all inevitable effluents – Mill B, Line 1 (for Fig. 8-13) 302
Table 0-25 - List of new connections and the capital cost for purchasing, insulation, and installation of new pipes – Mill B, Line 1 (for Fig. 8-15, Fig. 8-16, and Fig. 8-17) 303
Table 0-26 - List of all sinks in ascending order of contaminant concentration – Mill B, Line 2 (for Fig. 8-14) 304
Table 0-27 - List of all sources in ascending order of contaminant concentration – Mill B, Line 2 (for Fig. 8-14) 304
Table 0-28 - List of all inevitable effluents – Mill B, Line 2 (for Fig. 8-14) 305
Table 0-29 - List of new connections and the capital cost for purchasing, insulation, and installation of new pipes – Mill B, Line 2 (for Fig. 8-18, Fig. 8-19, and Fig. 8-20) 305
Table 0-30 – Mixed Cp of 0.333 kg water/ kg dried air humidity of dryer exhaust air of the Line 1 of mill B at different temperature intervals (for Fig. 8-21, Fig. 8-22, and Fig. 8-23) 306
Table 0-31 – Mixed Cp of 0.358 kg water/ kg dried air humidity of dryer exhaust air of the Line 2 of mill B at different temperature intervals (for Fig. 8-21, Fig. 8-22, and Fig. 8-23) 306
Table 0-32 - The extracted data for HEX network design – Whole Mill B (for Fig. 8-21, Fig. 8-22, and Fig. 8-23) 306
Table 0-33 - Existing HEX network – Whole Mill B (for Fig. 8-21, Fig. 8-22, and Fig. 8-23) 307
Table 0-34 - Final HEX network – Whole Mill B (for Fig. 8-21, Fig. 8-22, and Fig. 8-23) 309
Table 0-35 - (a) The new HEXs that should be purchased and (b) the existing HEXs that should be enlarged – Whole Mill B (for Fig. 8-21, Fig. 8-22, and Fig. 8-23) 311
Table 0-36 - Thermal and mechanical efficiencies of turbines in three mills (for Fig. 8-10, Fig. 8-24, and Fig. 8-33) 312

LIST OF FIGURES

Fig. 2-1– Simplified diagram of the Kraft process 8
Fig. 2-2 - Simple schematic of continuous digesting 9
Fig. 2-3 - Simple schematic of the washing department 10
Fig. 2-4 - Simple schematic of the bleaching department 10
Fig. 2-5 - Simple schematic of the pulp/paper machine 11
Fig. 2-6 - Simple schematic of the recovery loop 11
Fig. 2-7 - Canadian P&P production (Bogdanski, 2011) 12
Fig. 3-1 – Pinch Curves 16
Fig. 3-2 - Grand composite curve (GCC) and utility targeting 17
Fig. 3-3 – Simple schematic of the water-based process and the interaction between water and steam (PB: power boiler) 23
Fig. 3-4 – Limiting composite curves (concentration vs. contaminant mass load of sinks) of Wang & Smith (1994) 25
Fig. 3-5 – Concentration versus flowrate of all sinks and sources of Dhole (1998) 26
Fig. 3-6 – Mass load versus flowrate of all sinks and sources of El-Halwagi et al. (2003) 26
Fig. 3-7 - Direct/indirect heat recovery to design the heat exchanger network and non-isothermal mixing of Savulescu et al. (2002) 28
Fig. 3-8 - Superimposed mass and energy curves (SMEC) of Wan Alwi et al. (2011) 30
Fig. 3-9 - (a) vapor recompression heat pump (VRHP); (b) absorption heat pump (AHP) (Bakhtiari et al., 2010a) 39
Fig. 3-10 - AHP representations in H2OeLiBr phase diagram (Bakhtiari et al., 2010a) 39
Fig. 3-11 - Appropriate positioning of an AHP (Bakhtiari et al., 2010a) 40
Fig. 3-12 - Schematic of the steam turbine and AHP - trigeneration unit (Marinova et al., 2007) 42
Fig. 3-13 - System interaction analysis (Mateos-Espejel et al., 2010d) 43
Fig. 3-14 – Overall methodology 45
Fig. 3-15 - Simplified diagram of the three studied Kraft mills – the area between the dashed-dotted lines are similarities 47
Fig. 4-1 -Steps of benchmarking methodology 50
Fig. 4-2 -Steam consumption of main department and complete mill – Mill A (Dissolving Kraft pulp & batch digester) 53
Fig. 4-3 - Steam consumption of main department and complete mill – Mill B (Kraft paper pulp & continuous digester) 54
Fig. 4-4 - Steam consumption of main department and complete mill – Mill C (Kraft paper & continuous digester) 55
Fig. 4-5 - (a) Water consumption and (b) effluent production of Mill A 56
Fig. 4-6 - (a) Water consumption and (b) effluent production of Mill B 57
Fig. 4-7 - (a) Water consumption and (b) effluent production of Mill C 58
Fig. 4-8 - Allocation of water consumption for different departments (WS: washing, BE: bleaching, PM: pulp/paper machine, ST: steam plant, RE: recausticizing, CH: chemical preparation, DG: digesting, EV: evaporation) 60
Fig. 4-9 - Allocation of effluent production from different departments (WS: washing, BE: bleaching, PM: pulp/paper machine, ST: steam plant, RE: recausticizing, CH: chemical preparation, DG: digesting, EV: evaporation) 61
Fig. 4-10 - Allocation of steam consumption to different usages. (Pr.: process, Evap.: evaporation, BL: black liquor, Inj.: injection, Pre-hydr.: pre-hydrolysis) 63

Fig. 5-1 - The evolutionary diagram process integration techniques to assess water and energy systems (——— line: derived by analogy with other techniques, —·—·—: combination of two techniques) 71
Fig. 5-2 - Generic example under (a) current conditions and (b) after final modification; dashed red lines: new connections; dotted-dashed green lines: removed connections (FT: filtrate tank, CH-X: chemicals X, CH-Y: chemicals Y, PL: process line, PL2: process line 2, ST: steam, Eff: effluent, WW: warm water) 74
Fig. 5-3 – Simple schematic of the principle of simultaneous energy and water networks analysis (SEWNA) 76
Fig. 5-4 - Simultaneous energy and water networks analysis (SEWNA) 78
Fig. 5-5 – Procedure for data extraction of units BC and DE of the generic example (Fig. 5-2) and constraint analysis for water reutilization (WW: warm water, Eff: effluent, FT: filtrate tank) 80
Fig. 5-6 – Simple schematic of rules to identify projects; (a) Rule 1, (b) Rule 2, (c) Rule 3, (d) Rule 4 83
Fig. 5-7 – Water & Energy Pinch Curves before identification of water projects for generic example (Fig. 5-2) 84
Fig. 5-8 - Water & Energy Pinch Curves after identification of water projects for generic example (Fig. 5-2). 86
Fig. 5-9 – (a) Existing and (b) final hot and warm water network for generic example 90
Fig. 5-10 – Temperature of total water and filtrate to sinks under current conditions after applying step 3 and 4 92
Fig. 5-11 - (a) current, (b) final water utilization and filtrate reutilization in digesting and washing departments – mill C; dotted red lines: new connections; dashed purple lines: the existing connections with change in flowrate (W: washer, FT: filtrate tank, Sep & Scr.: separators and screeners, Dig: digester, Deknot: deknotters, NCC-EV: non-clean condensate of evaporation, WW: warm water: FW: fresh water: HW: hot water, Eff.: effluent) 97
Fig. 5-12 - (a) Current, (b) final water utilization and filtrate reutilization in bleaching and paper machine departments – mill C; dotted red lines: new connections; dashed purple lines: the existing connections with change in flowrate (W: washer, R: reactor; M: steam mixer, FT: filtrate tank, Mec.-P: mechanical pulping, Cle.: cleaners, Scr.: screeners, PM: paper machine, Vac. P: vacuum pump, Fil: filter, WW: warm water: FW: fresh water: HW: hot water, CH-A: acidic chemicals, CH-B: base chemicals, ST: steam, Eff.: effluent) 98
Fig. 5-13 - (a) current, (b) final water utilization and filtrate reutilization in scrubber, recausticizing, chemical preparation, and steam plant department, - mill C; dotted red lines: new connections; dashed purple lines: the existing connections with change in flowrate (Scrub: scrubber, BL-Con: black liquor concentrator, WeWT: weak wash tank, Dreg FT: dreg filter, LMF: lime mud filter, Clas: classifier, Scrub-Rec: scrubber of recauticizing, Ch. Prep.: chemical preparation, Mix-Ble: mixer-bleaching, Con. T: condensate tank, Con. T-Dig.: condensate tank of digesting, SC-Dig.: surface condenser of digesting, SC-EV.: surface condenser of evaporation, WW: warm water: FW: fresh water: HW: hot water, CH-A: acidic chemicals, CH-B: base chemicals, ST: steam, Eff.: effluent) 99
Fig. 5-14 - Simple schematic of rules 5 and 6 to identify projects; Rule 5: Do not use the effluent from recausticizing at pulp line and Rule 6: Use the alkaline effluent of pulp line in recausticizing 103
Fig. 5-15 – Water & Energy Pinch Curves; (a) before and (b) after identification of water projects 104
Fig. 5-16 – (a) Current and (b) final water production network 106
Fig. 5-17 – The change in temperature of total water and filtrate to sinks in current conditions and after applying SEWNA 107
Fig. 5-18 – Current and final, (a) steam consumption, (b) water consumption, and (c) effluent production – Mill C 109
Fig. 5-19 – The steam and water savings and effluent reduction of applying SEWNA on the other two Canadian Kraft mills (mill A and B) and a comparison between the three mills (mill A, B, and C) 112
Fig. 5-20 - The capital cost, net profit, and payback period after applying SEWNA on two other Canadian Kraft mills (mill A and B) and a comparison between the three mills (mill A, B, and C) 113

Fig. 5-21 – Benchmarking of (a) water consumption and (b) steam consumption of three mills (mill A, B, and C) before and after applying SEWNA 114
Fig. 6-1 - Methodology of equipments and department performance analysis 117
Fig. 6-2 - Simplified schematic of a washer 118
Fig. 6-3 - Schematic of digesting department 122
Fig. 6-4 - Thermal energy consumption (TEC) for digesting department 123
Fig. 6-5 - Schematic of washing department (WW: warm water, FW: fresh water, HW: hot water) 124
Fig. 6-6 - Water consumption at washing department – current and modified after projects 125
Fig. 6-7 – (a) DF and (b) EDR of washers – current and modified after projects 126
Fig. 6-8 - Schematic of bleaching sequences 127
Fig. 6-9 – (a) Thermal energy (TEC) and (b) water consumption of bleaching and chemical preparation department 128
Fig. 6-10 - Schematic of paper machine 128
Fig. 6-11 - Schematic of six-effect evaporator 129
Fig. 6-12 – Schematic of recovery boiler, concentrator cascade, and scrubber 130
Fig. 6-13 – (a) & (b) Flowrate of fuel, (c) temperature of air and stack gas, (d) steam production, and (e) fuel consumption (KPI) of the boilers 132
Fig. 6-14 - Simple schematic of deaerator 133
Fig. 6-15 – (a) Water consumption (m^3/h), (b) steam consumption (MW), and (c) steam consumption (%) of deaerator (d) flash of blowdown (BLF) 134
Fig. 6-16 - Thermal energy consumption (TEC) of recausticizing department 135
Fig. 6-17 - Simple schematic of green liquor preparation at recausticizing 136
Fig. 6-18 - Summary of all performance improvement projects, effect on (a) steam production, consumption, and excess steam and (b) water consumption and effluent production 138
Fig. 6-19 - Summary: shutting down the boilers, effect on (a) steam production and consumption, water consumption and (b) natural gas consumption 139
Fig. 7-1 – Retrofit HEX network design (R-HEN) of the water-based process 143
Fig. 7-2 – Step 1: Identification of saving potential 144
Fig. 7-3 – Five different categories of steam users in water-based processes 147
Fig. 7-4 - Simple schematic of Step 1-Phase 2 and 3 148
Fig. 7-5 – Two categories of waste streams; high and low corrosives (ambient temperature in winter: Ta=-10°C, temperature of fresh water in winter: T_{FW}=2°C, and minimum temperature approach: ΔT_{min}=10°C) 150
Fig. 7-6 – HEX network design algorithm 151
Fig. 7-7 - Simple schematic of a water-based process in (a) current condition with process line, air users, water and air networks, (b) Step 3-Phase 1 of first trial, (c) Step3 – Phase 2 & 3 of first trial, (d) Step 3-Phase 1 of second trial, (c) Step3 – Phase 2 & 3 of second trial, (e) final changes 153
Fig. 7-8 – Example of interaction in the process energy system (WW: warm water, HW: hot water) 157
Fig. 7-9 – (a) the effect of air inlet temperature to boiler, (b) targeting new air inlet temperature to boiler 159
Fig. 7-10 - (a) the effect of air inlet temperature to the dryer of the Kraft process, (b) targeting new air inlet temperature to dryer of Kraft process 160
Fig. 7-11 – Mixed Cp of exhaust air of dryer versus temperature at different levels of humidity (information extracted from work of (Söderman and Pettersson, 2003)) 163
Fig. 7-12 – Example of HEN design 167
Fig. 7-13 – Targeting temperature of water and changes in temperature of effluent (FW: fresh water, WW: warm water, HW: hot water, PM: paper machine) 169

Fig. 7-14 – Current and final air pre-heating network after applying R-HEN (RB: recovery boiler, PB: power boiler, PM: paper machine, eco.: economizer) 172
Fig. 7-15 - Current and final water production network after applying R-HEN (WWT: warm water tank, HWT: hot water tank, chem.. Prep.: chemical preparation, RB: recovery boiler, PB: power boiler) 174
Fig. 7-16 – Pinch Curves of the mill 179
Fig. 7-17 – Current and final air pre-heating network after applying Pinch Analysis (RB: recovery boiler, PB: power boiler, PM: paper machine, eco.: economizer) 180
Fig. 7-18 - Current and final water production network after applying Pinch Analysis (WWT: warm water tank, HWT: hot water tank, chem.. Prep.: chemical preparation, RB: recovery boiler, PB: power boiler) 181
Fig. 7-19 – (a) Estimation and final steam requirement and steam saving by means of R-HEN and Pinch analysis, (b) benchmarking of steam consumption after applying both R-HEN and Pinch analysis 184
Fig. 8-1 – Steam and water analysis enhancement and integration (SWAEI) methodology 188
Fig. 8-2 - Steam consumption of main departments and complete mill – current and after applying projects - Mill A 193
Fig. 8-3 - Water consumption – current and after applying projects - Mill A 194
Fig. 8-4 - Water & Energy Pinch Curves, (a) before water reutilization, (b) after water reutilization – Mill A 195
Fig. 8-5 - (a) current, (b) final water utilization and filtrate reutilization in washing and bleaching departments – Mill A; dotted red lines: new connections; dashed purple lines: the existing connections with change in flowrate (W: washer, FT: filtrate tank, Sep & Scr.: separators and screeners, Deknot: deknotters, R: reactor, M: steam mixer, PM: pulp machine, ST: steam, NCC-EV: non-clean condensate of evaporation, WW: warm water: FW: fresh water: HW: hot water, Eff.: effluent) 196
Fig. 8-6 - (a) Current, (b) final water utilization and filtrate reutilization in bleaching and pulp machine departments – Mill A; dotted red lines: new connections; dashed purple lines: the existing connections with change in flowrate (W: washer, R: reactor; M: steam mixer, FT: filtrate tank, Cle.: cleaners, Scr.: screeners, PM: pulp machine, Vac. P: vacuum pump, Fil: filter, WW: warm water: FW: fresh water: HW: hot water, CH-A: acidic chemicals, CH-B: base chemicals, ST: steam, Eff.: effluent) 197
Fig. 8-7 - (a) current, (b) final water utilization and filtrate reutilization in scrubber, recausticizing, and steam plant department, - Mill A; dotted red lines: new connections; dashed purple lines: the existing connections with change in flowrate (Scrub-RB: scrubber of recovery boiler, LMS: lime mud storage, Scrub-Recaust.: Scrubber of recauticizing, Con. T: condensate tank, Fil: filter) 198
Fig. 8-8 - (a) Current and (b) final air and black liquor (BL) pre-heating network after applying SWAEI methodology – Mill A (RB: recovery boiler, PB: power boiler, PM: pulp machine, eco.: economizer, MP: medium pressure, HP: high pressure, cascade con.: cascade concentrator, DS: dissolved solid, CFST: clean flashed steam of dryer, con. Condenser) 201
Fig. 8-9 - (a) Current and (b) final water production network after applying SWAEI methodology – Mill A (WWT: warm water tank, HWT: hot water tank, RB: recovery boiler, PB: power boiler, Eff-Cle.: effluent of cleaners) 202
Fig. 8-10 - (a)Current cogeneration, (b) Alt. 1, (c) Alt. 2 – Mill A (G: generator, C: condenser, A: absorber, E, evaporator, Gen.: turbine generator) 205
Fig. 8-11 - Steam consumption of main departments and complete mill – currently and after applying projects - Mill B 209
Fig. 8-12 - Water consumption – currently and after applying projects -Mill B 210
Fig. 8-13 - Water & Energy Pinch Curves, (a) before water reutilization, (b) after water reutilization – Mill B, Line 1 211

Fig. 8-14 - Water & Energy Pinch Curves, (a) before water reutilization, (b) after water reutilization – Mill B, Line 2 212
Fig. 8-15 - (a) current, (b) final water utilization and filtrate reutilization in digesting, washing, and bleaching departments – Mill B, Line 1(L1); dotted red lines: new connections; dashed purple lines: the existing connections with change in flowrate (L2: line 2, W: washer, FT: filtrate tank, Sep & Scr.: separators and screeners, Dig: digester, Deknot: deknotters, R: reactor, M: steam mixer, PM: pulp machine, NCHWT: non-clean hot water tank, CC-STP: clean condensate of steam plant, NCC-EV: non-clean condensate of evaporation, WW: warm water: FW: fresh water: HW: hot water, Eff.: effluent) 213
Fig. 8-16 - (a) Current, (b) final water utilization and filtrate reutilization in bleaching and pulp machine departments – Mill B, Line 1 (L1); dotted red lines: new connections; dashed purple lines: the existing connections with change in flowrate (L2: line 2, W: washer, R: reactor; M: steam mixer, FT: filtrate tank, Cle.: cleaners, Scr.: screeners, PM: pulp machine, Vac. P: vacuum pump, Fil: filter, WW: warm water: FW: fresh water: HW: hot water, CH-A: acidic chemicals, CH-B: base chemicals, ST: steam, Eff.: effluent) 214
Fig. 8-17 - (a) current, (b) final water utilization and filtrate reutilization at recausticizing - Mill B, Line 1 (L1); dotted red lines: new connections; dashed purple lines: the existing connections with change in flowrate (L2: line 2, DVScrEx: dust vent scrubber exchanger, NCHWT-Recaust.: non-clean hot water tank of recausticizing, FT-WEop: filtrate tank of washer Eop, NCC-Evap.: non-clean condensate of evaporation, CC: clean condensate, FW: fresh water: HW: hot water, Eff.: effluent) 215
Fig. 8-18 - (a) current, (b) final water utilization and filtrate reutilization in digesting, washing, and bleaching departments – Mill B, Line 2 (L2); dotted red lines: new connections; dashed purple lines: the existing connections with change in flowrate (L1: line 1, R: reactor, W: washer, FT: filtrate tank, Sep & Scr.: separators and screeners, Dig: digester, Deknot: deknotters, NCHWT: non-clean hot water tankWW: warm water: FW: fresh water: HW: hot water, Eff.: effluent) 216
Fig. 8-19 - (a) Current, (b) final water utilization and filtrate reutilization in bleaching and pulp machine departments – Mill B, line 2 (L2); dotted red lines: new connections; dashed purple lines: the existing connections with change in flowrate (L1: line 1, W: washer, R: reactor; M: steam mixer, FT: filtrate tank, Cle.: cleaners, Scr.: screeners, PM: paper machine, Vac. P: vacuum pump, Fil: filter, WW: warm water: FW: fresh water: HW: hot water, CH-A: acidic chemicals, CH-B: base chemicals, ST: steam, Eff.: effluent) 217
Fig. 8-20 - (a) current, (b) final water utilization and filtrate reutilization at recausticizing - Mill B, Line 2 (L2); dotted red lines: new connections; dashed purple lines: the existing connections with change in flowrate (L1: line 1, DVScrEx: dust vent scrubber exchanger, Vac. P – Recaust.: vacuum pump of recausticizing, Fil.: filter, NCHWT-Recaust.: non-clean hot water tank of recausticizing, FT-WEop: filtrate tank of washer Eop, FW: fresh water: HW: hot water, Eff.: effluent) 218
Fig. 8-21 - (a) Current and (b) final air pre-heating network after applying SWAEI methodology – Mill B, Line 1(L1) &2 (L2); (RB: recovery boiler, PB: power boiler, PM: paper machine, eco.: economizer, CT: condensing turbine, con.: condenser) 223
Fig. 8-22 - (a) Current and (b) final water production network after applying SWAEI methodology – Mill B, Line 1 (L1); (L2: line 2, WWT: warm water tank, HWT: hot water tank, eco.: economizer, FT-W#4: filtrate tank of washer #4, PM: pulp machine, GL: green liquor, SC: surface condenser, Evap.: evaporation, Recaust.: recausticizing) 225
Fig. 8-23 - (a) Current and (b) final water production network after applying SWAEI methodology – Mill B, Line 2 (L2); (L1: line 1, WWT: warm water tank, HWT: hot water tank, chem. SC: surface condenser, RB: recovery boiler, PB: power boiler, Evap.: evaporation, PM: pulp machine, FT: filtrate tank, Recaust.: recausticizing, HW: hot water) 226
Fig. 8-24 - (a)Current cogeneration, (b) Alt. 1, (c) Alt. 2, (d) Alt. 3, (e) Alt. 4 – Mill B (G: generator, C: condenser, A: absorber, E, evaporator, Gen.: turbine generator) 230

Fig. 8-25 – Steam consumption of main departments and complete mill – current and after applying projects 234
Fig. 8-26 - Water consumption – current and after applying projects 235
Fig. 8-27 – Water & Energy Pinch Curves, (a) before water reutilization, (b) after water reutilization – Mill C 236
Fig. 8-28 – (a) current, (b) final water utilization and filtrate reutilization in digesting and washing departments – mill C; dotted red lines: new connections; dashed purple lines: the existing connections with change in flowrate (W: washer, FT: filtrate tank, Sep & Scr.: separators and screeners, Dig: digester, Deknot: deknotters, NCC-EV: non-clean condensate of evaporation, WW: warm water: FW: fresh water: HW: hot water, Eff.: effluent)..... 237
Fig. 8-29 - (a) Current, (b) final water utilization and filtrate reutilization in bleaching and paper machine departments – mill C; dotted red lines: new connections; dashed purple lines: the existing connections with change in flowrate (W: washer, R: reactor; M: steam mixer, FT: filtrate tank, Mec.-P: mechanical pulping, Cle.: cleaners, Scr.: screeners, PM: paper machine, Vac. P: vacuum pump, Fil: filter, WW: warm water: FW: fresh water: HW: hot water, CH-A: acidic chemicals, CH-B: base chemicals, ST: steam, Eff.: effluent) 238
Fig. 8-30 - (a) current, (b) final water utilization and filtrate reutilization in scrubber, recausticizing, chemical preparation, and steam plant department, - mill C; dotted red lines: new connections; dashed purple lines: the existing connections with change in flowrate (Scrub: scrubber, BL-Con: black liquor concentrator, WeWT: weak wash tank, Dreg FT: dreg filter, LMF: lime mud filter, Clas: classifier, Scrub-Rec: scrubber of recauticizing, Ch. Prep.: chemical preparation, Mix-Ble: mixer-bleaching, Con. T: condensate tank, Con. T-Dig.: condensate tank of digesting, SC-Dig.: surface condenser of digesting, SC-EV.: surface condenser of evaporation, WW: warm water: FW: fresh water: HW: hot water, CH-A: acidic chemicals, CH-B: base chemicals, ST: steam, Eff.: effluent)..... 239
Fig. 8-31 - (a) Current and (b) final air pre-heating network after applying SWAEI methodology – mill C (RB: recovery boiler, PB: power boiler, PM: paper machine, eco.: economizer) 243
Fig. 8-32 - (a) Current and (b) final water production network after applying SWAEI methodology – mill C (WWT: warm water tank, HWT: hot water tank, chem. Prep.: chemical preparation, RB: recovery boiler, PB: power boiler)..... 244
Fig. 8-33 - (a)Alt. 1 – Cogeneration and selling electricity to the grid, (b) Alt. 2 – trigeneration and selling electricity to the grid – mill C (G: generator, C: condenser, A: absorber, E, evaporator, Gen.: turbine generator) 247
Fig. 8-34 – Comparison between the results of applying three techniques stand alone and in sequence in the framework of SWAEI methodology – Mill C 251
Fig. 8-35 – Benchmarking of (a) water consumption and (b) steam consumption of three mills (mills A, B, and C) before and after applying SWAEI methodology..... 253
Fig. 8-36 – Comparison of the capital cost, net profit, and payback period after applying SWAEI methodology on three Canadian Kraft mills (mills A, B, and C) 254
Fig. 8-37 - Effect of summer condition on the final results of selected alternatives..... 255
Fig. 8-38 - Effect of capital cost (CC), bunker oil price (BOP), electricity price (EP), steam price (STP), natural gas price (NGP), and combination of them over payback period for selected alternatives for implementation and whole year (6 months summer & 6 months winter) and comparison with only winter condition (red dot) 257

NOMENCLATURE

a	Annual	A	Cross-sectional area of pipe
A	Absorber of AHP	A	Area of HEX
Adt	Air dried ton	AHP	Absorption heat pump
A&WSS	Potential Air and water steam saving	BL	Black liquor
BL-Con.	Black liquor concentrator	BPT	Back-pressure turbine
C	Condenser of AHP	C_B	Base cost for a carbon steel floating heat HEX
CBF	Compact baffle filter	CEWO	Combined energy and water optimization
CH-A	Acidic chemical	CH-B	Base chemical
Chem. Prep. Or Ch. Prep.	Chemical preparation	CHP	Combined heat and power
CH-X	Chemical X	CH-Y	Chemical Y
C_i	Contaminant concentration of stream i	Clas.	Classifier
Cle.	Cleaner	Con.T	Condensate tank
Con. T-Dig.	Condensate tank of digesting	COP	Coefficient of performance
CP	Cost of piping	C_P	Purchasing cost of turbine
C_P	Heat capacity	CSC	Current steam consumption
C_T	Contaminant concentration of sink or source	CT	Condensing turbine
CWC	Current water consumption	d	Day
Deknot.	Deknotter	DF	Dilution factor
Dig.	Digester	Dreg. FT	Dreg filter
E	Evaporator of AHP	Eco.	Economizer
EDR	Equivalent displacement ratio	Eff.	Effluent
EPA	Equipment performance analysis	Evap.	Evaporation
F_{BM}	Base module coefficient	F_D	HEX type cost factor when switching from a floating head to a fixed head
FHexHS-SI	Feasible HEX heat sink – steam injection	F_M	Material cost factor for stainless steel 316 HEX
F_P	Design pressure factor to handle pressure up to 4000 kPa	FT	Filtrate tank
FW	Fresh water	G	Generator of AHP
GCC	Grand composite curve	Gen.	Generator turbine
G-G	Gas-gas	G-L	Gas-liquid
G-ST	Gas-steam	HEN	HEX network
HEX	Heat exchanger	HLMPP	Heat load model for P&P
HP	High pressure	HW	Hot water
HWT	Hot water tank	I&DSS	Potential for steam saving at steam injection points and deaerator
KPI	Key performance indicator	L	Length of pipe
L-L	Liquid-liquid	LMF	Lime mud filter
LMTD	Logarithmic mean temperature difference	LP	Low pressure
L-ST	Liquid-steam	MCR	Minimum cooling requirement
Mec. - P	Mechanical pulping	M-Eop	Eop steam mixer
MHR	Minimum heating requirement	M_i	Flowrate of stream i
MIHR	Maximum internal heat recovery	MILP	Mixed integer linear programming
MINLP	Mixed integer non-linear programming	Mix-Ble.	Mixer bleaching
MP	Medium pressure	M_P	Purchase cost of HEX
M_T	Installed cost of turbine	NAD	Network allocation diagram
NCGSC	Non-condensable gas surface condenser	NFHexHS-SI	Non-feasible HEX heat sink – steam injection
NG	Natural gas	NIM	Non-isothermal mixing
NRHS-NFHexHS-SI	Non-reducible heat source – non-feasible HEX heat sink – steam injection	NRHS-SH	Non-replaceable heat source – steam heater
PB	Power boiler	PI	Process integration
PL	Process line	PM	Pulp/paper machine
P&P	Pulp and paper	R	Reactor
RB	Recovery boiler	R-HEN	Retrofit HEX network design for water-based process

RHS-NFHexHS-SI	Non-reducible heat source – feasible HEX heat sink – steam injection	RHS-SH	Replaceable heat source – steam heater
RMWC	Reference mills' water consumption	RVD	Rotary vacuum drum
SC	Surface condenser	SC-Dig.	Surface condenser of digesting
SC-EV. Or SC-Evap.	Surface condenser of evaporation	Scr.	Screener
Scrub.-Rec.	Scrubber of recausticizing	Sep.	Separator
SEWNA	Simultaneous energy and water networks analysis	SH	Steam heater
SI	Steam injection	SMEC	Superimposed mass and energy curves
SR	Steam requirement	SS	Steam saving
SSS	Scope of steam saving	ST	Steam
SWS	Scope of water saving	T_a	Ambient temperature
T_{FW}	Fresh water temperature	T_i	Temperature of stream i
TMaxSS	Theoretical maximum steam saving	TMinSR	Theoretical minimum steam requirement
TSC	Total steam consumption	T_T	Temperature of sink or source
U	Overall heat transfer coefficient	$\dot{V}$	Volumetric flowrate
Vac. P.	Vacuum pump	VRHP	Vapor recompression heat pump
W	Washer	WCA	Water cascade analysis
WeWT	Weak wash tank	WW	Warm water
WWT	Warm water tank	ΔT_{min}	Minimum allowable approach temperature
υ	Velocity of fluid		

LIST OF APPENDICES

- Appendix 1 – Detail of HEX network of Chapter 5 (SEWNA) for mill C 280
- Appendix 2 – Detail of HEX network of Chapter 7 (R-HEN) for mill C 282
  - HEX network of R-HEN 282
  - HEX network of Pinch Analysis 285
- Appendix 3 – Detail of Water Analysis of Chapter 8 (SWAEI) for mill C 288
- Appendix 4 – Detail of HEX network of Chapter 8 (SWAEI) for mill C 289
- Appendix 5 – Detail of Water Analysis of Chapter 8 (SWAEI) for mill A 294
- Appendix 6 – Detail of HEX network of Chapter 8 (SWAEI) for mill A 296
- Appendix 7 – Detail of Water Analysis of Chapter 8 (SWAEI) for mill B-Line 1 301
- Appendix 8– Detail of Water Analysis of Chapter 8 (SWAEI) for mill B-Line 2 304
- Appendix 9 – Detail of HEX network of Chapter 8 (SWAEI) for mill B 306
- Appendix 10–Specification of Turbine in Three Mills of Chapter 8 312

1 CHAPTER 1: INTRODUCTION

1.1 Justification of Project

Water based processes, such as sugar, pulp and paper (P&P), and beer, are the processes in which water is the main medium for heat, mass, and momentum transfers. In these processes, water is utilized for different purposes, such as a reaction medium, a solvent in extraction processes, a washing agent, etc. The thermal energy (steam) and water systems in such processes are strongly interrelated and interact with each other. These processes along with other chemical processes envisage several issues, such as global competitiveness, public demand for sustainable products, and strict environmental regulations. One way to remain competitive is to decrease the manufacturing cost by reducing the cost of energy and water consumption and also water and wastewater treatments. In addition, in these processes, electricity is employed to pump the water and therefore the greater the water consumption and effluent production, the greater the electricity consumption. Thus, the main incentives for energy and water conservation programs are to reduce the manufacturing costs, CO_2 emissions, and wastewater going to the environment.

A very good representative example of a water-based process is pulp and paper (P&P). Pulp & paper is characterized as one of the large energy consumers and ranked as the fourth biggest energy user among the different industries (Chen et al., 2012; Persson and Berntsson, 2009). Water also is widely used in the P&P as a utility, such as steam or mass transfer agent, such as washing, pulp dilution, steam production, cleaning, pump cooling, etc. (Bryant et al., 1996). These high water and energy consumptions raise the final product cost. Rising costs, increasing worldwide competition, and decreasing pulp demand (RISI, 2010) are leading to closures of unprofitable mills in rural areas and towns where the mills are often located. In order for the industry to sustain its competitive advantage in the market, it must reduce its manufacturing costs and, in particular, its energy costs, which are estimated at 30% (Mateos-Espejel et al., 2011c) of total manufacturing costs.

Forest biorefinery is the conversion of forestry and agricultural biomass into a large spectrum of products by various extraction and transformation pathways. The concept of integrating biorefinery into an existing Kraft mill gives the opportunity to the P&P industry to increase their profitability, improve the environmental sustainability, and remain competitive by producing

high-value products, such as biofuels, chemicals, polymers, and pharmaceuticals (Mabee et al., 2005; Thorp, 2005). It is expected that most mill systems can handle biorefinery within current specification limits. However, this integration can place additional demands on the utility system and increase operating costs (e.g. additional capacity for wastewater treatment) (CETC, 2003). Thus, Kraft mills should be self-sufficient in terms of energy that can supply energy for the biorefinery. For these reasons, the P&P industry must focus its efforts to improve energy efficiency and, subsequently, reduce thermal energy consumption and gas emissions.

The prerequisite step to determine the potential for energy and water savings is benchmarking (Mateos-Espejel et al., 2011d). A benchmarking study is a comparison of a mill from the stand point of energy and water consumption with its competitors. The results of this study are the driving force for further attempts towards water and energy savings (CIPEC, 2008; Francis et al., 2006).

The most common process integration (PI) technique that has been widely employed in different industries to enhance energy efficiency is the Thermal Pinch Analysis. Pinch Analysis is the main tool for the retrofit heat exchanger (HEX) network design. Nevertheless, it does not deeply consider the interrelation between energy and water in water-based processes. Moreover, there are several constraints within the process that cause difficulty to enhance steam saving. These constraints are divided into two categories: physical and process. Thus, identification and analysis of these constraints are an essential task before conducting any effort to retrofit the HEX network (HEN) design so as to design a near optimal HEN. Pinch Analysis provides the targeting information, such as the minimum heating requirement (MHR) and minimum cooling requirement (MCR), however it requires significant effort for data extraction, analysis of the data, and constructing the composite curves. In addition, this targeting (MHR) for water-based processes is not always realistic and is sometimes far from what can be achieved in practice. For example, Mateos et al. (2011c) estimated 29% of steam saving using Pinch curves for a Kraft mill but the final steam saving that was accomplished was 13%, which is less than a half of the estimation. This difference is mainly because of the physical and process constraints and also the fact that all of the pinch rules to retrofit the HEN design could not be respected. In the other words, the Pinch rules cannot tackle all specific characteristics of a water-based process to design the HEN. Since the retrofit HEN design requires lots of effort and time; targeting energy

savings is significantly important. In addition, non-isothermal mixing (NIM) points should be considered at the HEN design; however, in Pinch Analysis they have not been taken into account. The pinch rules to design HEN are not sufficient and new practical rules and guidelines are required. Therefore, a new technique should be developed to overcome these aspects.

The most common PI technique that has been used for water efficiency improvement is Water Pinch analysis. Water Pinch analyses are graphical techniques that have been analogously constructed with Thermal Pinch Analysis (Dhole, 1998; Dhole et al., 1996; El-Halwagi et al., 2003; Wang and Smith, 1994). With the rising cost of fossil fuel and energy in general, water and energy conservation should be performed simultaneously to ensure sustainability and lower the cost of production. There were several attempts to incorporate energy and water analyses (Feng et al., 2008; Leewongtanawit and Kim, 2009; Manan et al., 2009; Savulescu et al., 2005b; Wan Alwi et al., 2011). Nevertheless, the existing configuration for warm and hot water production has been overlooked; the physical and process constraints have not been carefully examined. Most water-based processes require water not only in quantity and purity but also in temperature (Cortés et al., 2011; Feng et al., 2009). In terms of temperature of water supply to different demands, the acceptable temperature of water and filtrate should be analyzed carefully and not just considering the fixed-supply temperatures as a limitation for filtrate reutilization and hot or warm water usage. Most of the techniques applied for generic cases and in fact they were suited for small problems. The quality of the employed data is one of the major challenges for water analysis. The acceptable temperature and contaminant concentrations should be accomplished by a systematic approach. Each set of data should consider the characteristics of each type of process, for instance, the acceptable contaminant concentration for the sinks of one Kraft mill cannot be used for another mill because each mill has its own features. In this sense, systematic guidelines for extracting the data for water analysis should also be developed. Therefore, a new technique is required to address all these issues.

The process integration techniques are commonly applied with the assumption that all equipment and departments are working efficiently, but this is not always the case. Therefore, the performance of an individual piece of equipment or department in terms of their water and energy efficiency should be carefully evaluated.

P&P is also considered as the largest industrial cogeneration capacity in Canada, however, there is still potential for more power generation if the total steam consumption decreases (CIPEC, 2008; Mateos-Espejel et al., 2010d). Other process integration tools to further save heat and steam by recovering the low grade heat are heat pumps. These devices are installed to upgrade the low potential heat at low temperature to high potential heat at high temperature and save steam (Bakhtiari et al., 2010a, b; Costa et al., 2009; Costa et al., 2004). Trigeneration is a combination between cogeneration and a heat pump. It has been reported that trigeneration can reduce the net heat demand of the process and supply electricity to the grid (Marinova et al., 2007). Nevertheless, the investment required for this combination is high and should be examined carefully to decide whether it is profitable or not.

In addition to energy and water savings, the implementation of steam and water projects have several advantages with an environmental impact reduction through lower emissions of greenhouse gases (GHG) and smaller effluent production, lower maintenance costs due to more reliable equipment, and higher profit for the mill.

Applying PI techniques on a Kraft mill, prepares it as an energy optimized receptor for sustainable biorefinery integration through a well defined roadmap.

1.2 Context of the project

This research is part of the BiokrEn project. The global objective of the BioKrEn project is to evaluate the feasibility of biorefinery proposals for Canadian Kraft P&P mills and to develop optimized process designs that best integrate biorefining into existing mills. Three biorefining technologies are studied by other group members:

- Lignin recovery from black liquor
- Gasification of wood residues
- Hemicelluloses extraction from wood chips prior to pulping and their conversion into high-value products as bioethanol and furfural

In this project an in-depth energy analysis for three existing Canadian Kraft P&P mills is performed with the focus on developing technically feasible solutions to reduce the energy requirements of the mills, and creating excess steam for biorefinery integration.

1.3 General Objective

The main objectives of this thesis are:

- To develop new process integration techniques to individually enhance the efficiency of water and steam systems.
- To develop a steam and water analysis enhancement and integration (SWAEI) methodology to improve energy and water efficiency of a water-based process by combining the process integration techniques.

1.4 Structure and Organization

In Chapter 2, the water-based process is defined and Kraft pulp and paper is introduced.

In Chapter 3, the literature review concerning different PI techniques for the enhancement of water and energy efficiency is presented. These PI techniques consist of internal heat recovery, water reutilization, energy upgrading and conversion. Their application in the P&P process is shown. The main challenges regarding the most popular PI techniques are discussed. Finally, the literature is synthesized and the specific objectives are defined. The overall methodology is also described. The case studies which are three Canadian Kraft mills as good representatives of water-based process are introduced and characterized.

In Chapter 4, a new developed technique for benchmarking is presented. The cases are first benchmarked against reference data from the standpoint of steam and water consumption. Then, the three cases are compared from the standpoint of water and steam allocations for different uses. The areas with high water and steam consumption are determined and the causes are stated. Their water reutilization and heat exchanger networks are compared to identify the similarities and differences so as to exploit the advantages of one case as possible solutions for another case and vice versa.

In Chapter 5, the simultaneous energy and water networks analysis (SEWNA) for a water-based process is developed and presented. The concept and the structure of SEWNA are described. The technique consists of five steps: data extraction, constraint analysis, water and energy analysis, warm and hot water network analysis, and economic analysis. A generic example is used to illustrate the different steps of the technique. In the second part, this technique is applied on three Canadian Kraft mills. The advantages of this technique over previous studies are shown.

In Chapter 6, equipment performance analysis (EPA) is developed and presented. EPA encompasses four steps: identification, diagnosis, performance improvement, and economic analysis. The key performance indicator (KPI) regarding the steam and water consumption of equipment and departments are identified. The reference data for the KPIs are determined. The KPI of the case study is calculated and compared with reference data to diagnose the inefficiency. Some probable causes and remedial solutions based on the previous studies are identified. The result of this study is a starting point for an in-depth on-site analysis of the poor performance equipment.

In Chapter 7, the retrofit HEX network (R-HEN) design for water-based processes is developed and presented. The concept and structure of R-HEN is elaborated. The result of applying R-HEN on a Kraft mill is shown and compared with the result of applying Pinch Analysis to reveal the advantages of R-HEN.

In Chapter 8, the steam and water analysis enhancement and integration (SWAEI) methodology is developed and presented. It combines different PI techniques to obtain the highest steam saving by defining complementary projects. It consists of process simulation, pre-benchmarking, identification of water and steam projects, energy upgrading and conversion, implementation strategy, and post-benchmarking. In the identification of water and steam projects, three aforementioned techniques (SEWNA, EPA, and R-HEN) are applied sequentially. Different alternatives for using the saved steam are examined. A strategy to implement the most promising alternative is proposed. The methodology is applied on three Kraft mills and the detailed results are presented. The results of applying SWAEI and a stand-alone technique (SEWNA, EPA, and R-HEN) are compared to demonstrate the advantages of combining different PI techniques. In

addition, the results of the three mills are compared. The sensitivity analysis in the major parameters is conducted.

In the general discussion, the highlights of each chapter are presented.

In the conclusions and recommendation, the main contributions and the possibility for future work are discussed.

In the appendix the extracted data for water and energy analyses of chapters 5, 7, 8 are tabulated. Details of HEX networks of these chapters are also presented.

2 CHAPTER 2: WATER-BASED PROCESS AND KRAFT MILL

2.1 Water-based Process

Water-based processes, such as pulp and paper (P&P), sugar, and beer, are the processes where the main medium for three different transport phenomena (mass, heat, and momentum) is water. For example, in a Kraft P&P mill, water is used to dilute the pulp, carry the solid pulp (momentum transfer), and to wash and clean the pulp (mass transfer). It is also utilized to produce the steam and this steam is employed to retain and attain the temperature of the pulp (heat transfer). So the energy and water systems in such processes are strongly interrelated and interact with each other.

2.2 Kraft Pulp and Paper Mill

There are two major types of P&P mills: mechanical and chemical. The Kraft process is a form of chemical pulping and the most dominant P&P process in Canada. It is also a very good representative example of the water-based process.

A simple schematic of the Kraft process is shown in Fig. 2-1.

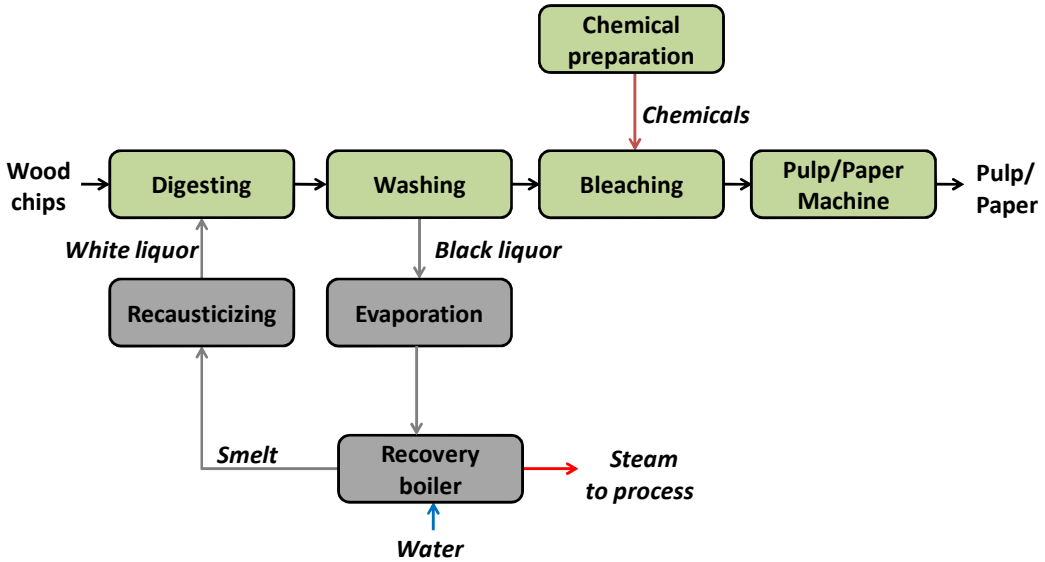

Fig. 2-1– Simplified diagram of the Kraft process

The Kraft process consists of two major parts: pulp/paper line and recovery loop. The pulp/paper line comprises digesting, washing, bleaching and chemical preparation, and the pulp/paper machine. The recovery loop consists of evaporation, the recovery boiler, and the recausticizing department.

Wood is the raw material of a P&P mill and composed of 40-47% cellulose, 25-35% hemicelluloses, and 16-31% of lignin. The yield of pulp production over original wood is usually between 40-50% (Smook, 2002).

2.2.1 Digesting

The digesting department is composed of three major equipments that utilize water and steam: the chip bin, steaming vessel, and digester (Fig. 2-2). At the chip bin, the injection of water and steam is carried out to partially remove air from the chips (Smook, 2002) and soften the wood. Steam is injected at the steaming vessel to preheat the chips and remove the air and non-condensable gases (Smook, 2002). The digester is the core of the Kraft process and could be either batch or continuous. A mixture of NaOH and Na_2S (white liquor) with a concentration of 100-110 g/L from recausticizing is added to the wood chips, which are cooked to separate individual fibers from lignin and form the brown pulp (Mateos-Espejel, 2009). The required heat for cooking is supplied by direct steam injection and/or heaters at the batch digester and using the upper and lower heaters of the continuous digester.

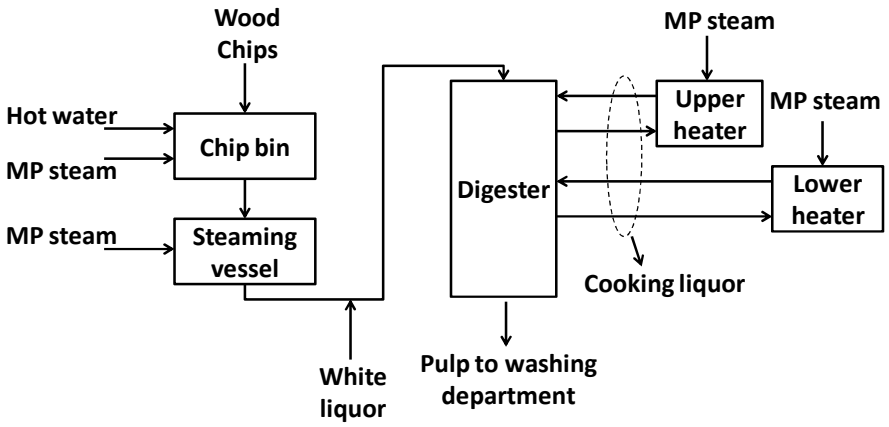

Fig. 2-2 - Simple schematic of continuous digesting

2.2.2 Washing

The produced brown pulp is directed towards the washing section (Fig. 2-3) where a series of countercurrent washers are employed to separate the fibers from the black liquor (BL). BL is a mixture of used chemicals in the digester and most of the lignin and hemicelluloses. Knots are very thick, uncooked chips that exist in the pulp from the digester. They are separated from the pulp in the deknotter before the washers. Oversized particles are also removed in the separator and screener before further washing and sending the pulp to bleaching (Smook, 2002).

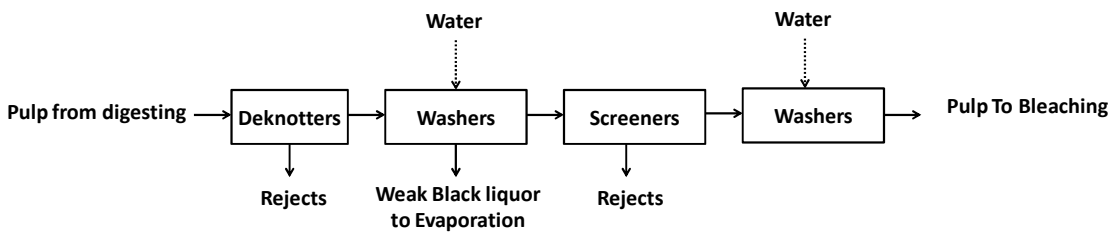

Fig. 2-3 - Simple schematic of the washing department

2.2.3 Bleaching and Chemical Preparation

The objectives of bleaching are to remove lignin and brighten the fibers (Smook, 2002). Typically, the bleaching department in Canadian Kraft mills consists of five stages: D0, Eop, D1, E2, and D2 (Turner et al., 2001). The chemicals, such as ClO_2 and H_2SO_4, are added at stages D0, D1, and D2 while at stage Eop, O_2, H_2O_2, and NaOH are added. Only NaOH is used as a bleaching agent in stage E2. Each stage is composed of one bleaching reactor and one washer (Fig. 2-4). The steam is employed to attain a certain temperature for the bleaching reactors. Some of the needed chemicals (NaOH and ClO_2) for bleaching are provided by chemical preparation (Fig. 2-4). The generated effluents at this department are acidic effluent from the filtrate tank of the D0 washer and alkaline effluent from the filtrate tank of Eop washer.

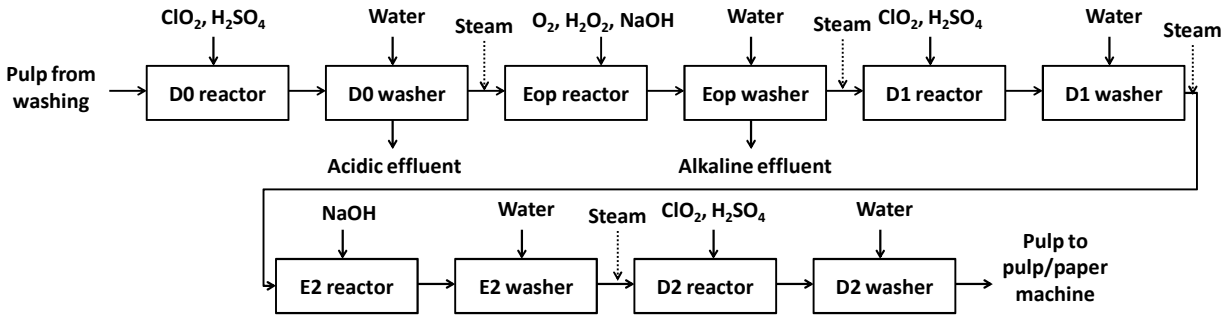

Fig. 2-4 - Simple schematic of the bleaching department

2.2.4 Pulp/Paper Machine

The bleached pulp is sent to the pulp/paper machine department to finally produce dried pulp/paper. At this department, pulps undergo cleaning and screening to remove oversized particles (Fig. 2-5). The huge quantity of filtrate that leaves the pulp/paper machine contains a small amount of fiber and is called white water. The white water is typically recycled to the paper machine, and bleaching stages.

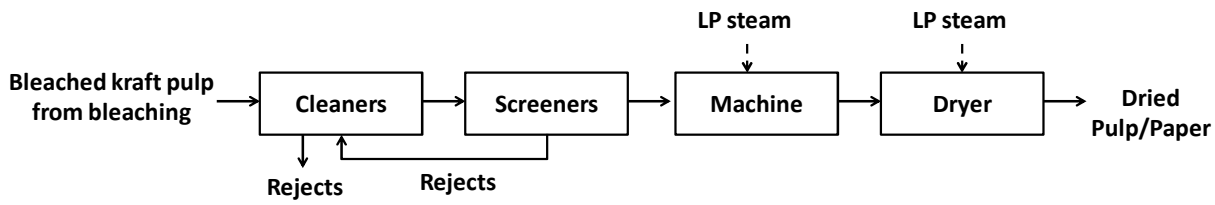

Fig. 2-5 - Simple schematic of the pulp/paper machine

2.2.5 Recovery loop

At the recovery loop (Fig. 2-6), the low concentration black liquor, weak black liquor, is concentrated in multi-effect evaporators. The concentrated black liquor is burned in the recovery boiler to produce steam and melted chemicals called smelt. The last step of the recovery loop is the conversion of smelt into white liquor in recausticizing. White liquor is regenerated by soda-lime reactions as follows (Mateos-Espejel, 2009):

Causticizing: $CaO + H_2O \rightarrow Ca(OH)_2 + Na_2CO_3 \rightarrow CaCO_3 + 2NaOH$

Lime burning: $CaCO_3 + heat \rightarrow CaO + CO_2$

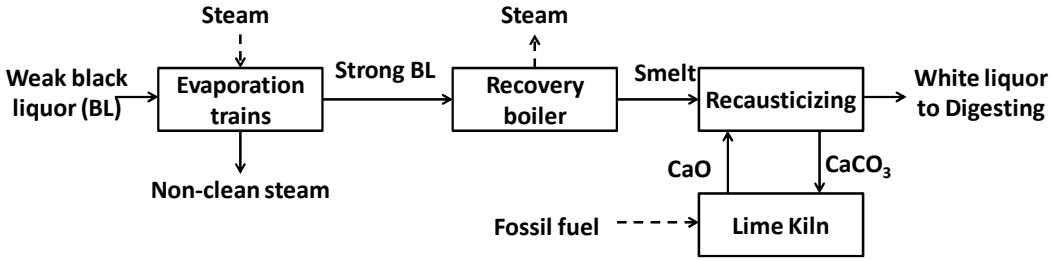

Fig. 2-6 - Simple schematic of the recovery loop

2.3 Current Status of Pulp &Paper

The forest products industry, in particular pulp and paper (P&P), is one of the major contributors to Canadian industry and provides 360 000 direct jobs. Forest products account for 3% of Canada's gross domestic product. Canadian P&P production has declined during past decade as shown in Fig. 2-7. This industry is also characterized as a large energy consumer and ranked as the fourth biggest energy user among different industries (Chen et al., 2012; Persson and Berntsson, 2009). An old Kraft mill utilizes an average of 25 GJ of steam per air dried ton (GJ/Adt) produced pulp/paper (Browne, 1999), while the average and modern Canadian mills consume 21.7 and 12.1 GJ/Adt of steam (CIPEC, 2008). Water is also widely used in P&P as a utility, such as steam, and mass transfer agent, such as washing, pulp dilution, steam production, cleaning, pump cooling, etc (Bryant et al., 1996). For example, an average mill designed in the 1960s and 1980s consumes 78 and 44 m^3 of water per Adt (m^3/Adt) of produced pulp/paper (Chandra, 1997).

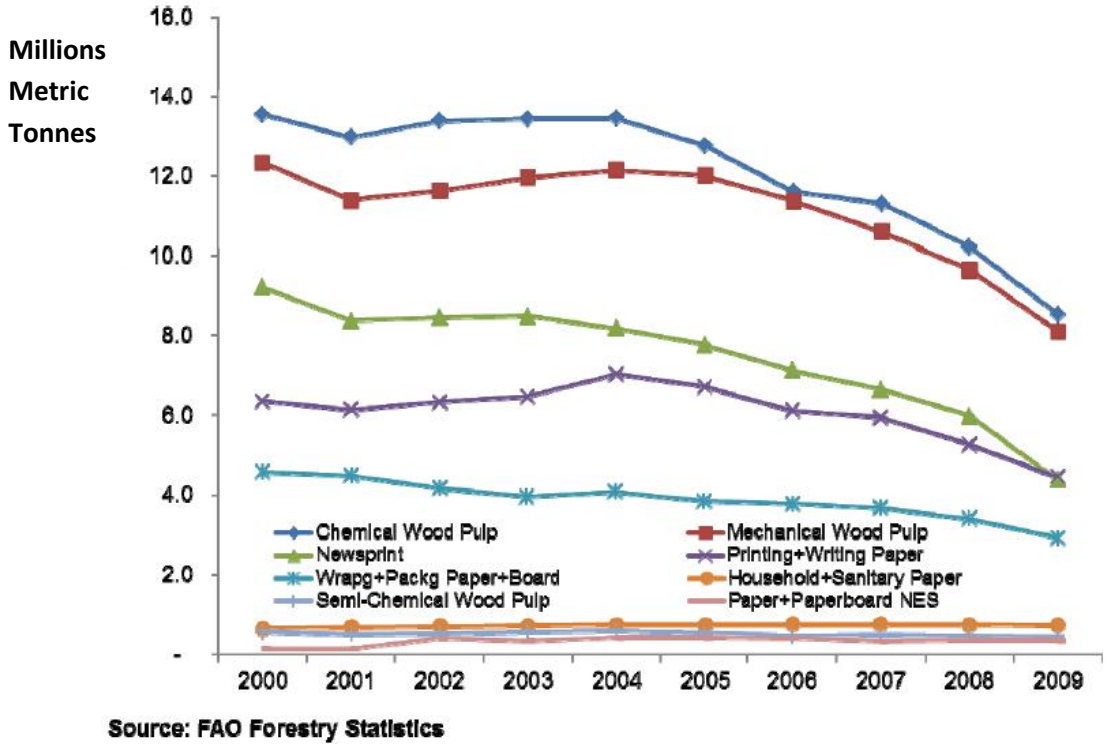

Fig. 2-7 - Canadian P&P production (Bogdanski, 2011)

The utilized thermal energy is steam (Chen et al., 2012; Persson and Berntsson, 2009). In total, energy accounts for up to 30% of total manufacturing costs of pulp/paper in Canada (Mateos-Espejel et al., 2010d). It is mainly supplied by burning the black liquor in the recovery boiler or bark at the power boiler. However, more than 40% of this steam is generated in fossil fuel power boilers (CIPEC, 2008; Mateos-Espejel et al., 2010d). With volatile fossil fuel prices, the final cost of pulp/paper is rising. In addition, fossil fuel consumption causes high CO_2 emission into the atmosphere and strict environmental regulations force mills to reduce their levels of emission. These are the main incentives to conduct an energy conservation program in a P&P mill.

3 CHAPTER 3: LITERATURE REVIEW

On the basis of the general objectives of this thesis, the literature review is divided into 10 sections: simulation, benchmarking, internal heat recovery, water reutilization, equipment performance analysis, energy upgrading, energy conversion, trigeneration, selling steam to the local district, and combining different process integration techniques. The literature is then synthesized and the specific objectives are presented. The overall methodology to achieve these objectives is shown. The case studies which are three Canadian Kraft mills are introduced and characterized.

3.1 Simulation

The first step of any retrofit analysis for energy and water savings is to construct a simulation that accurately represents the existing configuration of the process (Mateos-Espejel et al., 2010c; Paris, 2000). A methodology for the development of the Kraft mill simulation has been presented by Mateos et al. (2010c; 2011d). The information to build the process simulation has been obtained from mill personnel, PIDs, DCS, process data, and previous studies. The objective of the simulation is to provide data for energy and water studies and to evaluate the proposed changes and the implementation of biorefining technologies.

3.2 Benchmarking

A prerequisite step to determine the potential for energy and water savings is benchmarking (Mateos-Espejel et al., 2011d). A benchmarking study is a comparison of a mill with its competitors, or with a model mill with new technology. The results of this study constitute a driving force for further attempts toward water and energy savings, environmental impact reduction by decreasing effluent production and greenhouse gas emissions, and finally operating cost reduction (CIPEC, 2008; Francis et al., 2006). Mateos et al. (2011b) established a systematic approach to perform benchmarking. They defined new key performance indicators based on exergy analysis to show the areas of inefficiencies. They also used Water and Thermal Pinch Analysis to target saving. They applied the method on an operating Kraft mill and found that the steam and water consumption of the mill is beyond average Canadian mills. In the preliminary results, they also showed that the pressure release valve (PRV) should be replaced by

cogeneration and the Thermal and Water Pinch Analyses should be performed to improve the process efficiency. There is also an energy benchmarking study that has been done by the Pulp and Paper Research Institute of Canada (Paprican or FPInnovations). They showed the energy usage for each department, best practices of energy consumption for each department, and the main causes of energy waste. Their survey is recommended as a good source for Canadian P&P mills to adopt the best practices (CIPEC, 2008).

3.3 Internal Heat Recovery

International Energy Agency in 1995 defined Process Integration (PI) as the "*Systematic and general methods for designing integrated production systems, ranging from individual processes to total sites, with a special emphasis on the efficient use of energy and reducing environmental effects*" (Dimian, 2003). There is a broad range of PI techniques available to engineers to enhance the energy efficiency of a process. In the following sections, the principles of Pinch Analysis as the main tool for heat recovery and heat exchanger design are explained. The applications of Pinch Analysis in P&P are presented to reveal the main challenges of applying this tool. The main challenges regarding the retrofit heat exchanger (HEX) network design using Pinch Analysis for a water-based process are then described. Finally, the potentials for improvements are synthesized.

3.3.1 Pinch Analysis

The Pinch Analysis that was developed by Linnhoff et al. at the beginning of the 80's is the most common PI technique for analyzing the thermal performance of processes (Linnhoff et al., 1994). The basis of Pinch Analysis displays in a temperature vs. enthalpy diagram of all possible heat transfers within the process (Fig. 3-1) and is known as composite curves. It consists of hot and cold composite curves. The hot composite curve represents all available heat in the process from hot streams that need to be cooled. The cold composite curve shows all the process heat demands of cold streams that need to be heated. These curves define the minimum heating requirement (MHR), minimum cooling requirement (MCR), maximum internal heat recovery, and the Pinch point. The closest approach between two curves occurs at the Pinch point and is called the minimum allowable approach temperature (ΔT_{min}). This value is the minimum acceptable

temperature deference between the input and output of hot and cold streams in a HEX (Kemp, 2007; Kumana, 2002).

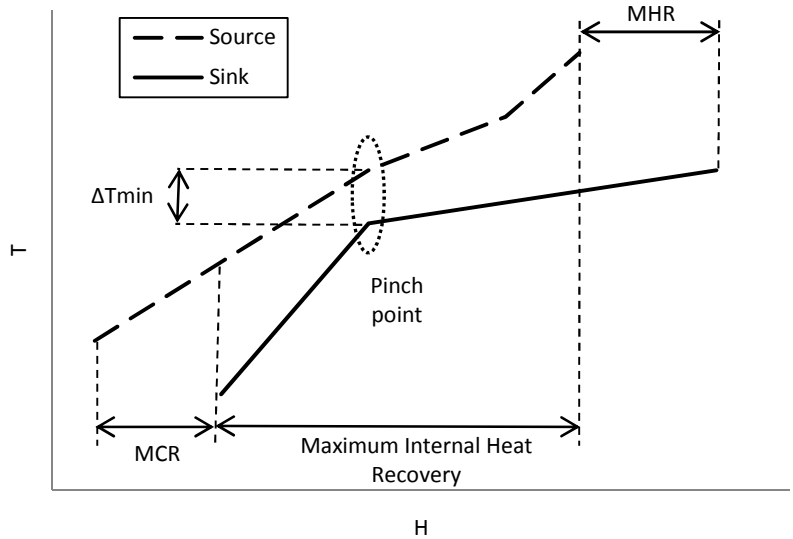

Fig. 3-1 – Pinch Curves

In order to achieve the targets, such as minimum heating requirement (MHR) and minimum cooling requirement (MCR) (Fig. 3-1), the heat exchanger network (HEN) design must satisfy three conditions:

- Don’t use hot utilities below the pinch temperature.
- Don’t use cold utilities above the pinch temperature.
- Don’t transfer heat from hot streams above the pinch to cold streams below the pinch (Kemp, 2007; Kumana, 2002).

Grand composite curve (GCC) is another way to illustrate the Pinch Analysis and represent the net heat flows in the process. The main function of the GCC is to identify the availability of the heat contained in hot effluents, to choose the level of utility for the process (Fig. 3-2), and consequently the opportunities for cogeneration (Brown et al., 2005; Dhole and Linnhoff, 1993; Maréchal and Kalitventzeff, 1996, 1997, 1998a, b; Périn-Levasseur et al., 2008) .

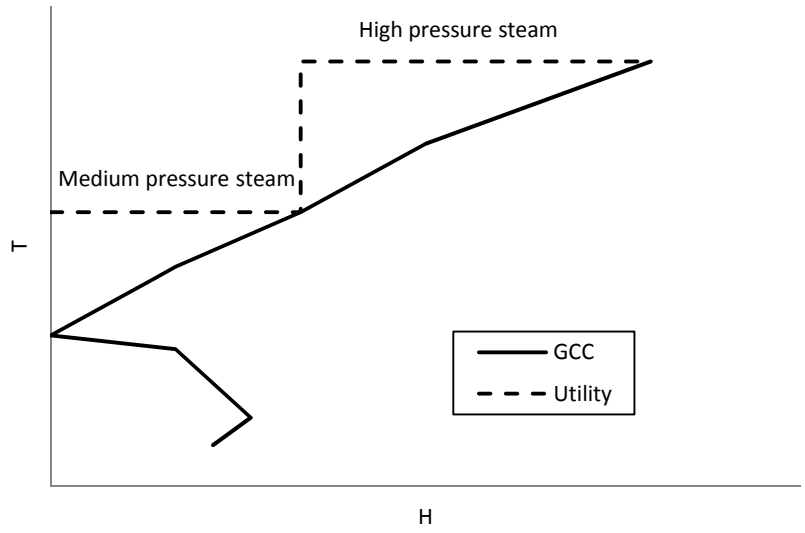

Fig. 3-2 - Grand composite curve (GCC) and utility targeting

3.3.2 Application of Pinch Analysis in P&P

Pinch Analysis has been employed to resolve specific problems of P&P, such as improvement in the efficiency of effluent treatment by reducing effluent temperatures (Noel and Boisvert, 1998) or the installation of new equipment (Berglin and Berntsson, 1998; Rouzinou et al., 2003). The heat exchanger network design has also been performed for an operating Kraft process (Lutz, 2008; Mateos-Espejel, 2009; Mateos-Espejel et al., 2010d), mechanical mill (Isaksson et al., 2012) and for a model mill (Axelsson et al., 2006). According to the American Process (2010), by applying Pinch Analysis in a chemical pulp, chemical pulp with integrated paper/paperboard, and combined chemical and mechanical pulp, energy savings of 15-17% can be achieve.

In P&P, there are several energy consumer areas that have received particular attention for heat integration (like evaporation, cooking, drying, steam generation, water production, etc). In the case of evaporation and cooking, most of the studies focused on employing the grand composite curve (GCC) for better heat integration and reduction of steam consumption in this area (Axelsson et al., 2008; Higa et al., 2009; Périn-Levasseur et al., 2008; Pharande et al., 2011; Xiao and Smith, 2001). Algehed (2002) and Bengtsson (2004) also presented the concept of excess heat to be utilized in the evaporation system.

Dryers are one of the major energy users in the P&P process. Improvement in drying heat integration has mainly been carried out by means of Pinch Analysis (Kemp, 2005),

thermodynamic modelling (Sivill and Ahtila, 2009; Sivill et al., 2005; Söderman and Pettersson, 2003), and a mathematical approach (Pettersson and Söderman, 2007). Kemp (2005) suggested that the Pinch Analysis can be performed to recover the heat of dryer exhaust air. However, it is constrained by thermodynamic and economic factors. Apart from steam leakage and heat loss at the dryer, almost all of the latent heat of steam is transferred to exhaust air. According to Sivill & Ahtila (2009), all the literature assumed constant heat capacities for the exhaust air of the dryer while it is not applicable to exhaust air under condensing conditions. The specific heat flow rates and heat transfer coefficients of this stream are strongly nonlinear (Pettersson and Söderman, 2007). Soderman & Pettersson (2003) studied these effects by means of thermodynamic modelling. They used temperature intervals to define both the heat transfer flows and the heat transfer coefficients. Heat recovery from the exhaust air of the dryer has a significant impact on the whole economy of pulp and papermaking and has been investigated by several researchers and the industry (Afshar et al., 2012; Kong et al., 2011; Metso, 2011; Pettersson and Söderman, 2007; Sivill and Ahtila, 2009; Sivill et al., 2005; Söderman and Pettersson, 2003). Pettersson & Soderman (2007) also performed another study combining evolutionary and non-linear programming for heat recovery within this area. The typical humidity of exhaust air is between 100-200 gH_2O/kg of dry air at temperatures of 80-90^oC (Pettersson and Söderman, 2007; Sivill et al., 2005; Söderman and Pettersson, 2003). A portion of its heat content (50-60%) is mainly used to heat up water to 50-60^oC, white water to 55^oC and hood supply air to 55-60^oC (Metso, 2011; Sivill and Ahtila, 2009; Sivill et al., 2005).

The steam plant is another important area for heat integration. Stack gas of the recovery boiler and hog fuel power boiler contains water vapor, carbon dioxide, carbon monoxide, sulfur n-oxide, and chlorine. The main constraint for heat recovery of stack gas is the formation of sulfuric acid resulting from the condensation of SO_2. This acid causes rapid corrosion inside heat exchangers (HEX) and should be avoided. The other option is to install very expensive HEXs, which is definitely uneconomical. This stack gas involves a vast quantity of energy (20% fuel energy) at high quality (180-300^oC) and is typically used to pre-heat the air inlet to boilers. It is recommended that the outlet temperature of stack gas from the HEX (if directed to HEX) should be at least 20^oC above the SO_2 dew point to avoid sulfuric acid formation. Based on this, the temperature dew point was reported between 87-107^oC for different stack gases, so the

temperature outlet of the stack gas from HEX can be between 107-127°C (Mostajeran Goortani et al., 2011). Zhelev & Semkov (2004) studied different design contact economizers for the heat recovery of stack gas.

Several researchers also used GCC to analyze the production and utilization of steam and the actual requirements of the process in order to increase the power generation capacity using turbines at the steam plant (Brown et al., 2005; Périn-Levasseur et al., 2008).

3.3.3 Retrofit HEX network design and challenges

Pinch Analysis is typically employed for the retrofit HEX network design. Nevertheless, it does not completely consider the interrelation between energy and water in water-based processes. Moreover, there are several constraints within such a system that create difficulty to enhance energy (steam) savings. These constraints are divided into two categories: physical and process. Physical constraints encompass the distance between the streams, material, and type of existing heat exchangers, auxiliary equipment, space requirements, maintenance cost and fouling (Carlsson et al., 1993). Nordman & Berntsson (2009a) proposed a method to evaluate the opportunity for heat integration for the retrofit design considering physical constraints and called it Advanced Composite Curves. It is a method based on Pinch Analysis. They defined four different curves above the pinch point and four below it. These curves aim to graphically identify options for retrofit HEN with respect to technical factors. This method evaluates the placement of heaters and coolers in the existing HEX network. They found that if the existing heaters and coolers are positioned closer to the pinch point, there is higher potential for cost-effective retrofit. This method has been applied to identify the heat integration opportunities for the retrofit design in P&P (Nordman and Berntsson, 2009b; Ruohonen and Ahtila, 2010; Ruohonen et al., 2010).

There are also process constraints, such as “hard” and “soft” constraints, on temperature levels. In the hard temperature constraints, for instance temperature of reactor or temperature discharge of corrosive fluids (as stack gas of recovery boiler), the temperature can only change in a narrow range of variability. On the other hand, in the case of soft temperature constraints, for instance temperature of non-corrosive fluids (such as stack gas of the natural gas power boiler), the temperature can be relaxed easily in a wide range (CETC, 2003). Thus, identification and

analysis of these constraints are an essential task before conducting any effort to retrofit the heat exchanger network (HEN) design so as to design a near optimal HEN.

Pinch Analysis provides the targeting information, such as MHR and MCR, however it requires significant effort for data extraction, analysis of the data, and constructing the composite curves. In addition, this targeting (MHR) for water-based processes is not always realistic and is often far from what can be achieved in practice. For example, Mateos et al. (2011c) estimated 29% steam saving using Pinch curves for a Kraft mill, but a final steam saving of only 13% was achieved, which is less than half of the initial estimation. This is mainly due to the physical and process constraints and also the fact that all of the pinch rules for the retrofit HEN design cannot be respected. In the other words, the Pinch rules cannot tackle all specific characteristics of the water-based process to design the HEN. Ruohonene et al. (2009) presented a technique to determine targeting of energy saving and called it the heat load model for P&P (HLMPP), which requires less data input. In pinch analysis, the temperatures of start and target and the heat load of all streams are required whereas HLMPP requires much less data, like the daily production rate and dry content of the finished product. In this method, a comparison between energy targeting of HLMPP and current utility consumptions suggests the potential for heat exchanger network improvement. Nevertheless, this method mainly is applicable for mechanical pulping (Isaksson et al., 2012; Jönsson et al., 2010; Ruohonen et al., 2009). Savulescu et al. (2012) also presented a method as an alternative to Composite Curves of Thermal Pinch Analysis and called it mapping thermal energy integration for retrofit assessment. Since the retrofit HEN design requires lots of time and effort, targeting and identifying the scope of energy saving are extremely important.

In non-water based processes, such as a refinery, water is used in the HEN to cool down the streams, and then is directed to the cooling tower to reject the heat and be reused. In this sense, the cooling requirement is meaningful. In contrast, in water-based processes, water is employed in the HEN to cool down the streams and then, in almost all cases, this water is utilized as warm or hot water in the process. Thus, it could be said that in such processes there is not an actual cooling requirement. The MCR from Pinch curves is not useful for these processes.

Energy is transferred to the process directly (steam injection points) and indirectly (heat exchangers). An important aspect of interaction of water and energy in water-based processes is heat exchanging via a non-isothermal mixing (NIM) point and direct heat transfer (Mateos-Espejel, 2009). For example, the total steam injection in the Kraft process accounts for approximately 30% of steam consumption (Keshtkar et al., 2013). Savulescu and Alva-Argaez (2008) have studied the non-isothermal mixing (NIM) points of the Kraft mill. They found that the contribution of NIM elimination can be up to 5% of the total energy improvements. Mateos et al. (2010d) eliminated the major NIM at a Kraft mill and saved 5%. Brown et al. (2005) also proposed some NIM elimination projects to improve the use of utilities in order to generate more electricity in combined heat and power (CHP). Generally, NIM is often assumed as inevitable steam consumption and not considered in energy analysis (Savulescu and Alva-Argaez, 2008). In addition, Pinch Analysis often overlooked the evaluation and targeting of steam saving at NIM points. Therefore, it cannot give good solutions to reduce the steam as such points.

3.3.4 Synthesis of Internal Heat Recovery

The main potential for improvement of the retrofit HEX network design in the water-based process can be synthesized as follows:

- It is important to preliminarily assess the existing HEN and the physical constraints in-depth to improve heat recovery via a new network design.
- Hard and soft constraints regarding the temperature sensitive units should be analyzed so as to determine the potential for steam saving and design a near optimal HEN.
- A targeting is required ahead of redesigning the existing HEN to provide a realistic estimation of the final benefit. This should be possible with the least number of data and effort.
- The NIM that has already been evaluated individually should be included in a systematic HEN design.
- Pinch rules for the retrofit HEN design are not sufficient to achieve the identified target due to physical and process constraints. New rules and guidelines are required for this reason.
- A systematic approach and algorithm is also required to perform the retrofit HEN design.

3.4 Water Reutilization

Water is one of the main resources for different chemical industries and the cost of environmental regulations is an incentive for a water conservation program so as to reduce the wastewater to the environment (Kim and Smith, 2004). In addition, in a typical process, energy is necessary for water heating, cooling, and pumping and, hence, the larger the amount of water consumption and effluent production, the larger the energy requirement (Mateos-Espejel et al., 2011b). Therefore, the reduction of energy consumption is another motivation to decrease the water consumption and, consequently, the effluent production.

In water-based processes, water is utilized for different purposes, such as reaction medium, solvent in extraction processes, washing agent, etc. These processes entail a significant amount of water and energy. The utilized thermal energy is steam and most of the heat of steam is transferred to water during utilization in the process, for instance, steam injection in the pulp line to attain and retain the temperature of the pulp in the Kraft mill. This steam by itself is also generated from the water. So the energy and water systems in such processes are strongly interrelated and interact with each other.

Figure 3-3 illustrates the concept of the water-based process. The heat load of steam injection to the process line can be shifted to water by raising the temperature of water. Besides, reducing the total water consumption leads to a reduction in effluent production. Effluents carry a high amount of energy and a reduction in their quantity will also decrease the total energy waste. This results in a reduction of steam injection in the process. With the rising cost of fossil fuel and energy in general, water and energy conservation should be performed simultaneously to ensure sustainability and lower production costs.

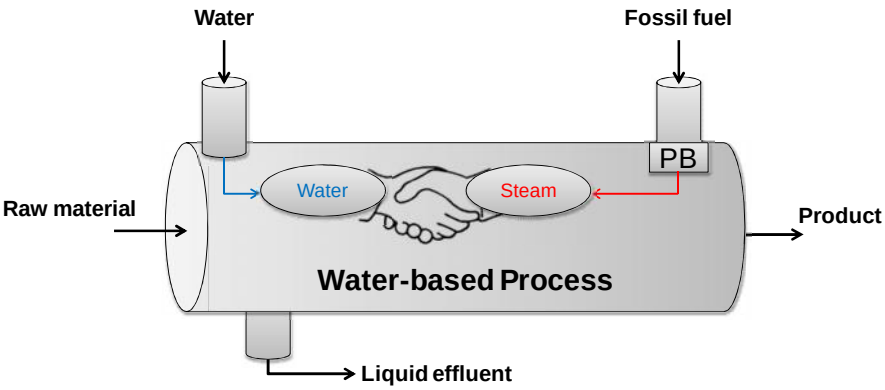

Fig. 3-3 – Simple schematic of the water-based process and the interaction between water and steam (PB: power boiler)

There are several ways to minimize water consumption: water demand reduction through process changes by analyzing the performance of equipment and/or the department (Keshtkar et al., 2012) or considering water reuse between operations if filtrate (with/without dilution with fresh water or other filtrate streams) from an operation can be accepted for use in another operation (Bryant et al., 1996).

The techniques for water reuse between operations, which have been developed in the past decades, can be classified into three different categories: only water conservation techniques, energy optimization of water network, and combining the energy and water optimizations. There are two different approaches for each category: mathematical and conceptual. The conceptual approaches have been widely applied by industries due to visualization of the procedure. However, the mathematical approaches have also been examined between researchers. In the next sections, the different categories and approaches of water conservation have been summarized.

3.4.1 Water Analysis

Several mathematical optimization algorithms have been developed to minimize only water consumption and effluent production. Bagajewicz (2000) reviewed the principle of these algorithms for continuous processes, such as refineries and pulp and papers. Kim & Smith (2004) also developed a mixed integer nonlinear programming (MINLP) algorithm for the batch processes where time also plays an important role. Nevertheless, there are a lot of difficulties to formulate the mathematical modeling and sometimes due to nonlinearity it does not guarantee

optimality. In addition, it does not provide enough insights on how the water reuse network is constructed (Dhole, 1998; Wan Alwi and Manan, 2008).

There are broad spectrums of conceptual techniques. To develop the mass transfer equations, an analogy between mass and heat phenomena has been carried out (Shafiei et al., 2003). Similar to Pinch Analysis, El-Halwagi and Manousiouthakis (1989) developed the Pinch diagram, which consists of rich and poor streams so as to determine the minimum quantities of mass separating agents. El-Halwagi (1997) and El-Halwagi & Spriggs (1998) also presented the principles of mass integration and mass exchange where the driving force and quantity exchanged are differences in concentration (vs. temperature in Thermal Pinch) and mass (vs. enthalpy in Thermal Pinch), respectively. They established the concept of mass exchangers as equipment with direct-contact mass-transfer to selectively remove certain components (pollutants) from a rich phase using a lean phase. The lean phases typically consist of solvents, adsorbents, ion exchange resins or stripping agents, etc. There are different types of mass exchangers including absorption, adsorption, ion exchange, leaching, stripping, and extraction (El-Halwagi, 1997).

There are three dominating graphical techniques that are known as Water Pinch and can be distinguished from the literature. Wang & Smith (1994) developed the limiting composite curves (Fig. 3-4) for the overall plant. These curves have been analogously constructed with Thermal Pinch Curves and represent contaminant concentration versus contaminant mass load for all sinks. The fresh water line is drawn against the limiting curve to set the targeting for minimum fresh water and demand for process. Dhole (1998) pointed out the main drawbacks of this technique, which makes it impractical in many situations. The x-axis represents mass contaminant; however, it does not give any direct information about water flowrate. Likewise, the curves do not offer guidelines regarding mixing and reuse of water. Cleaning and separating operations, such as washing, extraction, etc., can be analyzed by limiting composite curves while several operations, such as reactors, boilers, etc., cannot be modeled by means of this technique. In addition, if there is any gain or loss of water in the process, it cannot be described (Hallale, 2002). Dhole et al. (1998; 1996) created another technique to assist the development of a system closure. In this technique, all of the water sinks (demands) and sources (supplies) are represented in a graphical or tabular form, in terms of contaminant concentration versus flowrate of the water sinks and sources (Fig. 3-5). There is a possibility to directly identify the potential for

reutilization and/or regeneration. The water pinch locates the point where two curves touch. It is used to identify and target fresh water consumption and effluent production. Nevertheless, it can be altered by mixing source streams or diluting the source streams with fresh water. Therefore, the targeting values are also changing during these mixing procedures and, hence, are not reliable. This technique can be easily applied to water-based processes, such as the Kraft pulping process where the main streams content of the desired product are enriched by reducing the level of contamination through a succession of operations, such as dilution, displacement or thickening (Shafiei et al., 2003). El-Halwagi et al. (2003) presented another graphical technique to minimize the use of fresh resources and determine an accurate target for fresh water consumption and effluent production. The graph is visualized as a load of contaminant in a mass unit versus the flowrate for all sinks and sources of the overall process (Fig. 3-6). Similar to Thermal Pinch Analysis, they established some rules: fresh water is employed in the sinks below the pinch point and unused sources are discharged above the pinch point.

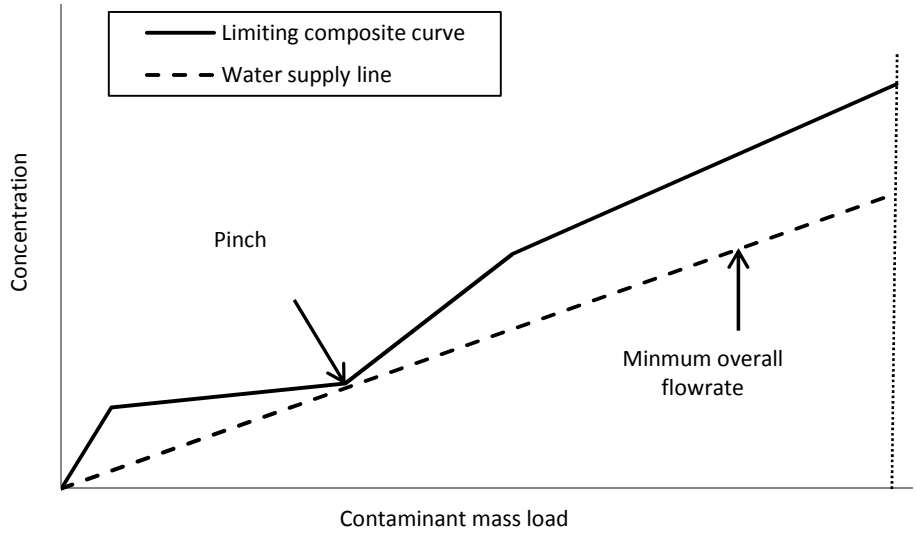

Fig. 3-4 – Limiting composite curves (concentration vs. contaminant mass load of sinks) of Wang & Smith (1994)

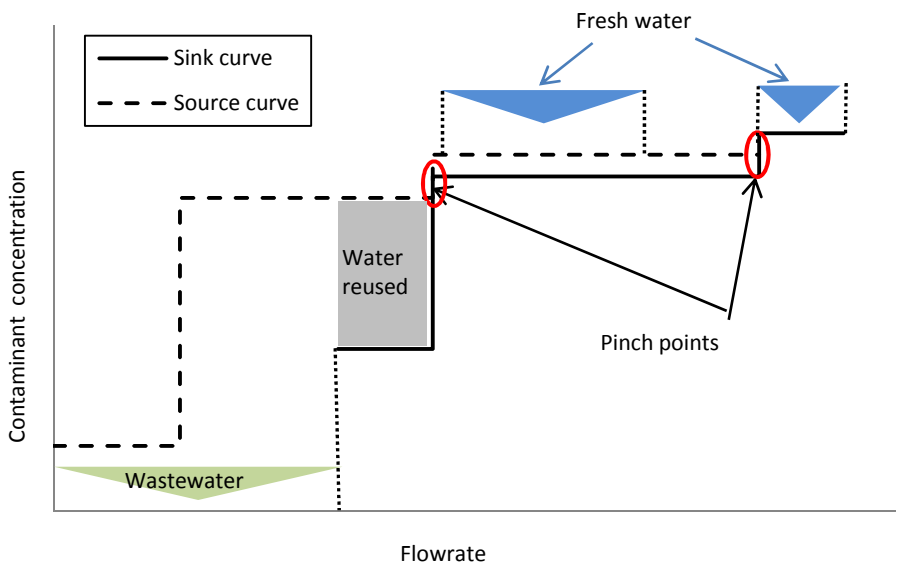

Fig. 3-5 – Concentration versus flowrate of all sinks and sources of Dhole (1998)

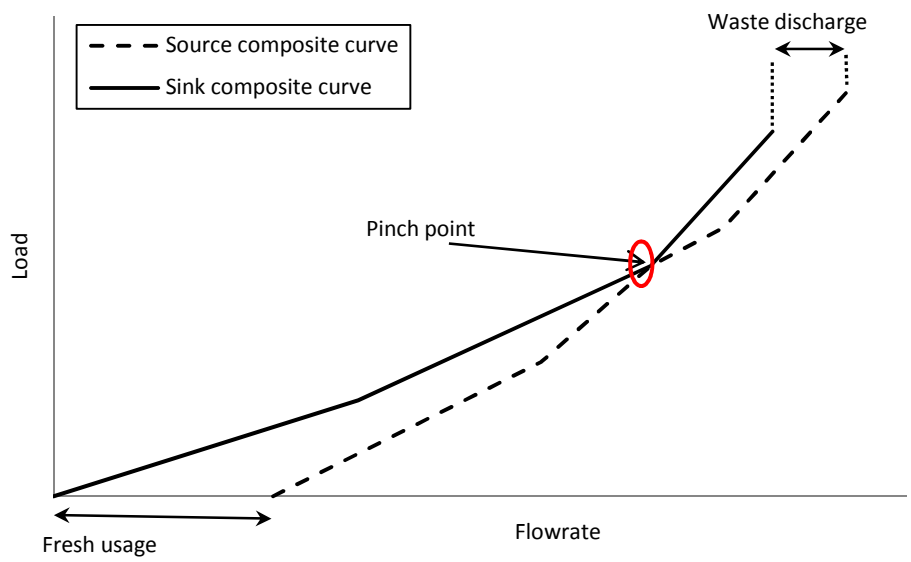

Fig. 3-6 – Mass load versus flowrate of all sinks and sources of El-Halwagi et al. (2003)

There are several other graphical or tabular techniques, which have been developed based on these three aforementioned techniques. Sorin & Bedard (1999) presented a two-step tabular technique and called it the Evolutionary Table. They identified the Global Pinch Point so as to design multiple water reuse networks for the same targets. This technique has difficulties identifying water reuse projects when the process has more than one global pinch point, as indicated by (Hallale, 2002) and (El-Halwagi et al., 2003). Hallale (2002) developed another graphical technique with a similar representation to that of (Dhole, 1998), however, the y-axis

displayed purity of water rather than contaminant concentration. He constructed a water surplus diagram by analogy with the Grand Composite Curve of Thermal Pinch Analysis. Nevertheless, it requires substantial computation to develop the graphs. Manan et al. (2004) developed another technique based on the (Hallale, 2002)'s technique and called it water cascade analysis (WCA). Wan Alwi & Manan (2008) presented the network allocation diagram (NAD), which was a generic approach based on the technique of El-Halwagi et al. (2003).

3.4.2 Water and energy analysis

Several studies have been dedicated to develop the water-energy oriented techniques so as to combine water and energy optimization. Two different approaches can be distinguished from the literature: those that just focused on the development of an efficient water production network and its HEX network and those that comprised both water network closure aspects and the water production network with its HEX network.

3.4.2.1 Heat integration of water production network

The first type of study is associated with energy integration within the water networks and addresses the ways for the production of hot and warm water process requirements. Savulescu et al. (2002) proposed a technique based on the thermodynamic approach and Pinch Analysis to design the water network. They introduced the concept of direct/indirect heat recovery to design the heat exchanger network and non-isothermal mixing. They developed source-demand energy composite curves by analogy to the (Dhole, 1998) technique for water reutilization networks. These curves represented temperature (vs. contaminant concentration in Dhole's technique) versus flowrate for all clean water sources and demands (Fig. 3-7). These curves were used as a tool for stream mixing. Savulescu et al. (2005a) also presented a technique to decrease the number of heat exchangers for water production based on the stream mixing. Nordman & Berntsson (2006) studied the hot and warm water tanks of the Kraft process. They added the warm/hot water tank curve to hot and cold Pinch composite curves so as to maximize excess heat for the process.

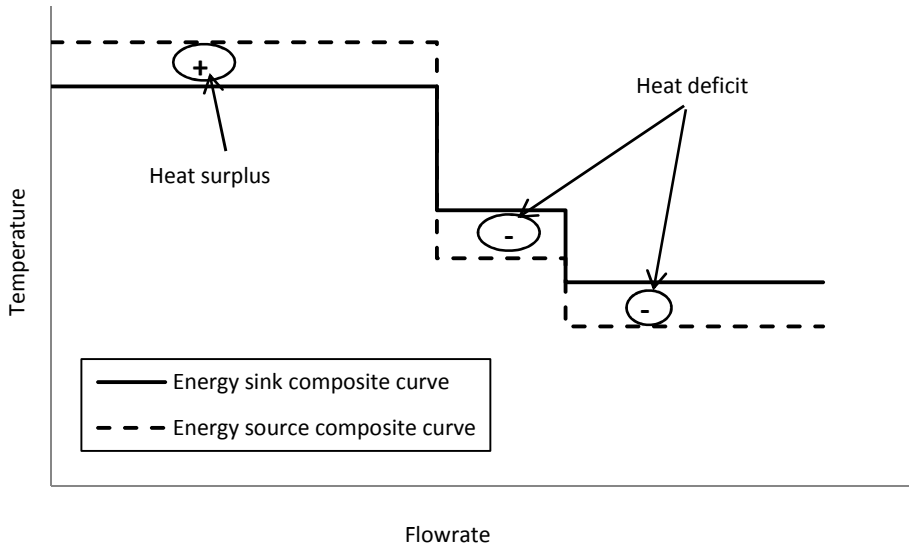

Fig. 3-7 - Direct/indirect heat recovery to design the heat exchanger network and non-isothermal mixing of Savulescu et al. (2002)

In addition to these conceptual techniques for heat integration within the water production network, some mathematical approaches have also been developed. For example, Bogataj & Bagajewicz (2008) published a mixed integer non-linear programming (MINLP) procedure to design the water network based on direct and indirect heat exchanging.

3.4.2.2 Simultaneous reduction of water and energy

The second type of study aims to simultaneously reduce water and energy consumptions. Savulescu et al. (2005b) developed a two-dimensional grid diagram to reduce the water consumption and the total number of heat exchangers using non-isothermal mixing. This diagram comprises the axis for the temperature, concentration, and flowrate of water. The approach to generate the direct and indirect heat recovery for water production was similar to one that was presented by (Savulescu et al., 2005a). Leewongtantwit & Kim (2009) have conducted a similar study and presented the Water Energy Balance Diagram. The objective of their work as well as the approach was quite similar to that of (Savulescu et al., 2005b). Feng et al. (2008) presented the effects of non-isothermal mixing on the energy performance of water allocation networks. Their study involved utility consumption, total heat exchange load, and the number of heat exchange matches.

Manan et al. (2009) presented a sequential technique to minimize water and energy by combining numerical and graphical approaches. First of all, the water cascade analysis (WCA) of (Manan et al., 2004; Wan Alwi and Manan, 2008) and Water Pinch in cumulative mass contaminant versus the flowrate of all sinks and sources of (El-Halwagi et al., 2003) have been employed to determine the water reutilization opportunities. Then similar to the source-demand energy composite curves of (Savulescu et al., 2002), they developed a diagram and called it the "heat surplus diagram". They constructed it for both above and below the pinch concentration point of the Water Pinch diagram. This diagram is a representation of temperature versus flowrate of all sinks and sources in the process and is used to extract stream data for the heat exchanger design of the water network by means of Thermal Pinch Analysis.

Wan Alwi et al. (2011) presented a graphical approach (Fig. 3-8) called superimposed mass and energy curves (SMEC). It includes a combination of the cumulative mass load contaminant versus the cumulative flowrate of (El-Halwagi et al., 2003) and temperature versus flowrate of (Savulescu et al., 2002) and (Manan et al., 2009) for all the sinks and sources of the process. The pinch point has been identified by means of cumulative mass load versus flowrate curves. In addition, these curves were employed to determine the water reutilization opportunities. Similar to the study of (Manan et al., 2009), the temperature versus flowrate curves are mainly used to extract stream data for the heat exchanger design of the water network using Thermal Pinch Analysis. Cortes et al. (2011) presented another sequential technique; water reutilization potentials were identified and then temperature versus enthalpy curves for all sinks and sources were developed so as to determine the heat recovery potential for a sugar mill.

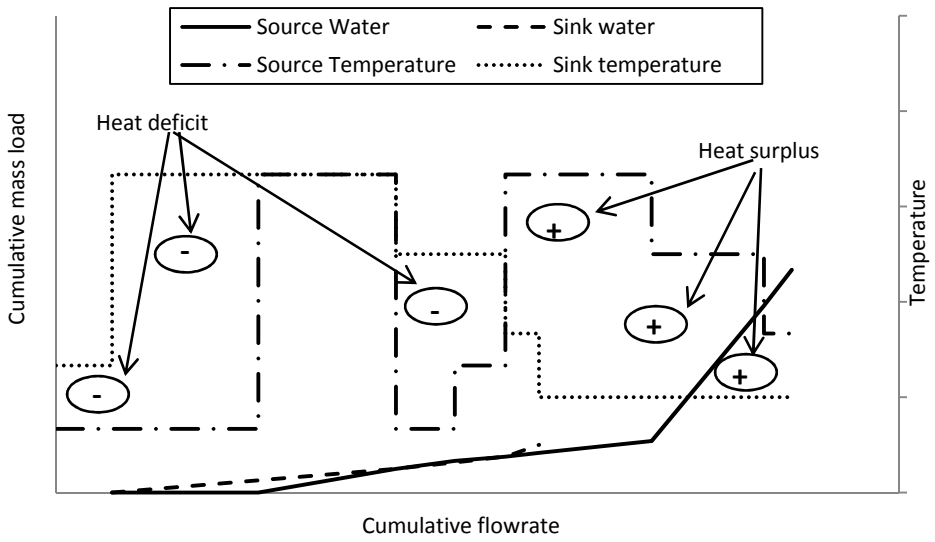

Fig. 3-8 - Superimposed mass and energy curves (SMEC) of Wan Alwi et al. (2011)

Similar conceptual techniques also have been developed by coupling the three different Water Pinch analyses (Dhole, 1998; El-Halwagi et al., 2003; Wang and Smith, 1994), Thermal Pinch Analysis (Linnhoff et al., 1994), and other heuristic approaches and applied specifically in P&P processes. Savulescu et al. (2005c) used the Pinch Analyses to decrease water and energy consumption of a Kraft P&P mill with a payback period of less than one year. Wising et al. (2005) studied a P&P mill to reduce the hot water consumption and, consequently, diminish steam consumption for hot water production. As a result, the excess heat availability increased and was used for the evaporation system.

Mateos et al. (2010a, b) have performed an interaction study between the water and energy system of a P&P mill. They applied the Water and Thermal Pinch Analyses in sequence and showed that the implementation of water reutilization projects had some synergistic effects on total energy and steam consumption. In addition, it could change the Thermal Pinch Composite Curves and reduce the minimum heating requirement (MHR); however the maximum cooling requirement (MCR) increased.

Alva-Argaez et al. (2007) developed a technique, which is called combined energy and water optimization (CEWO), to identify water and energy efficiency improvements based on the fresh water reduction path with the highest energy savings response. CEWO evaluates first the energy-based water and energy targets of the base case and identified inefficiencies (Alva-Argaez et al.,

2008). Secondly, this technique employs the contaminant concentration versus flowrate of (Dhole, 1998) to identify areas of opportunity for improving the water efficiency through reuse/recycle (Alva-Argaez and Savulescu, 2009). Hot and warm water tanks have been analyzed to reduce the saved water from the paths with the highest steam savings (Alva-Argaez et al., 2007).

Some studies have also been carried out using mathematical optimization to minimize the water and energy consumption. Bagajewicz et al. (2002) developed a two-step model: a linear programming (LP) model was first solved to synthesize the water closure and then a mixed integer linear programming (MILP) model was established for the construction of a heat exchanger network as well as stream mixing. Leewongtanawit and Kim (2008) presented an optimization algorithm considering multi-contaminants based on the technique proposed by (Savulescu et al., 2005a, b). Dong et al. (2008) also developed multi-contaminant water-allocation and a heat exchange network using mixed integer non-linear programming (MINLP) to minimize the total annual cost. Feng et al. (2009) investigated a sequential mathematical modeling to synthesize water allocation and heat exchanger networks. Boix et al. (2012) also solved an MILP model consisting of two steps to reduce the number of interconnections, water consumption and heat exchangers. Chew et al. (2013) presented an MINLP model to reduce water consumption at brownstock washing of a P&P mill. The energy implication of this reduction has also been assessed.

3.4.3 Water and energy in non-isothermal mixing points

As mentioned earlier, several studies have investigated the effect of non-isothermal mixing (NIM) points (Mateos-Espejel, 2009; Mateos-Espejel et al., 2011c; Savulescu and Alva-Argaez, 2008). Generally, these NIM points occur in process line that contains significant amount of water and/or in water production network. The negative effects of these direct steam injections can be eliminated or reduced to save steam. Therefore, they should be included in water and energy analysis technique.

3.4.4 Water and energy in condensate recovery

Steam and condensate are good examples of the direct link between water and energy systems. Mateos et al. (2010d, 2011c) have conducted a study about condensate recovery in a Kraft mill. They found that the reutilization of the condensate could save up to 32 % of the current water consumption at a steam plant and less than 1% of energy consumption. Sometimes, there is not enough attention given to the condensate return. Thus, there is a need for good management of the condensate return; the more condensate that returns to the boiler, the less makeup water is required (Savulescu and Kim, 2008).

3.4.5 Synthesis of water and energy analyses

Similar to energy, the cost of fresh water resources, the quality and availability of it should be considered in the total site analysis for ensuring sustainability and cost-effective operation (Savulescu and Kim, 2008). Besides, the existing configuration and utility infrastructure as existing constraints have to be taken into account at the preliminary level to ensure that all design changes have positive contributions to the process savings and a reasonable trade-off with investment costs. However, these parameters, to identify the water closure measures, have not been considered in most of the studies. Many studies tried to reduce the energy without showing the existing configuration for the hot and warm production network. Neglecting the existing infrastructures may lead to a different hot and warm water production network than the current one and impose unnecessary costs for the heat exchanger network. Ideally, the hot and warm water should be produced at an even higher temperature than they are under the current conditions. This can be done with the existing water network and its heat exchanger network by only adjusting the flowrate to and temperature for the heat exchangers and water tanks after a reduction of the water requirement. In addition, to design the water network, all the waste streams, including the stack gas of boilers, etc., should be considered to produce the hot and warm water, and not only the liquid effluents.

Many authors considered the cleanest to cleanest approach for filtrate reutilization and also restricted the water reutilization at above or below the Water Pinch Point (El-Halwagi et al., 2003; Wan Alwi et al., 2011; Wan Alwi and Manan, 2008). The cleanest filtrate may exist at the beginning of the process and it cannot be reutilized at the next stage of the process. For example,

in the process with several washers, the filtrate from washer #1 might be cleaner than washer #3 in terms of contaminant concentration but due to respecting countercurrent flow it cannot be used in washer #2. Besides, in a real process the acceptable contaminant concentration along the process may change, thus the water pinch point should not be a barrier for filtrate reutilization and countercurrent flow should be respected.

Most of these studies did not provide systematic guidelines for water mixing. The guidelines for each process should be specific to that process, for example, the ones that can be applicable for P&P might not be applicable for the food industry due to the sensitive product of the latter. On the contrary, the targeting aspect received a lot of attention from many researchers (El-Halwagi et al., 2003; Hallale, 2002). Although having a good estimation before doing the whole analysis could give some insight, it is not, however, as important as a systematic and practical guideline for water reutilization and mixing.

Most water-based processes entail water not only in quantity and purity but also by temperature (Cortés et al., 2011; Feng et al., 2009). In terms of the temperature of the water supply for different demands, the acceptable temperature of water and filtrate should be analyzed carefully and not just considering the fixed-supply temperatures as a limitation for filtrate reutilization and hot or warm water usage. However, the main objective to incorporate the temperature curves in water analysis (Manan et al., 2009; Wan Alwi et al., 2011) was to supply water and filtrate at a fixed temperature. Therefore, this resulted in purchasing other heat exchangers or pre-heating the filtrate before reutilization, both of which are not efficient.

In most of these studies for reducing the water consumption in the process, the global process energy implications of water closure have not been analyzed. The implementation of water saving measures may have serious effects on the thermal balance of the process. For example, the steam consumption may be reduced, the cooling demand may be increased, and the effluent temperature may rise (Mateos-Espejel, 2009; Mateos-Espejel et al., 2010a, b). The default of these approaches is that they do not consider water as a heat source, and this important element of the thermal problem is often ignored.

Many studies are also complex, time consuming, and involve unnecessary computations, such as following different paths to reduce the water production in CEWO (Alva-Argaez and Savulescu, 2009), applying Water and Thermal Pinch Analyses in sequence that require constructing the Thermal Pinch Curves twice (Mateos-Espejel et al., 2010a, b; Mateos-Espejel et al., 2011c), or constructing water purity versus flowrate and a water surplus diagram (Hallale, 2002). Most of the techniques applied to generic cases (Savulescu et al., 2005a, b) and, in fact, they are suited for small problems. However, the existing configuration, constraints for reutilization of filtrates and other constraints regarding the operating conditions as well as the existing water production network have not been considered. Mostly, the water network has been synthesized without considering the interactions with the rest of the process.

The quality of data used is one of the major challenges for water analysis. The acceptable temperature and contaminant concentrations should be accomplished by a systematic approach. Each set of data should consider the characteristics of each type of process, for instance, the acceptable contaminant concentration for the sinks of one Kraft mill cannot be used for another mill because each mill has its own features. In this sense, systematic guidelines for extracting the data for water analysis of a water-based process should be developed.

3.4.6 Water reutilization in Pulp & Paper

Generally, closing the water system in a P&P mill has several advantages, such as reducing the total fresh water and steam consumption, discharging less wastewater to the environment, lowering the total amount of chemical consumption, and less fiber losses.

3.4.6.1 Application of water-energy oriented process integration to Kraft P&P

The process areas with the greatest potential for fresh water reduction in a Kraft mill have been identified in the bleach plant and the pulp/paper machines (Bryant et al., 1996). Several water reutilization opportunities for P&P processes and in particular in the Kraft process have been presented in the Simons Ltd monograph (Turner et al., 2001). Non-clean condensate from the surface condenser of the evaporation system could be replaced by all or part of the clean water that is utilized at the brown stock washing system. Another option for water reduction in washing systems was to use the countercurrent flow to exploit the filtrate effectively, reduce clean water

consumption, and increase the quantity of black liquor towards the recovery boiler (Chew et al., 2013; Turner et al., 2001).

Ideally, at the bleaching section, there should not be any water usage except for the last stage washer nor any overflow from the filtrate tank except at the first and second stages (acidic and alkaline effluent). Since most steam injection in the pulp is carried out in bleaching, the reduction in water consumption leads also to a reduction in steam consumption. Thus, this is the main motivation to reduce water consumption at the bleaching section. Simons Ltd monograph proposed three major water recycling approaches at the bleaching section, direct countercurrent, jump-stage countercurrent, and split-flow jump-stage countercurrent. In direct countercurrent water was used in the final washer and filtrate from each stage was recycled to the preceding one (D2 filtrate to E2 washer). In Jump-stage countercurrent, the filtrate of each stage was recycled except the preceding stage, which was skipped (jumped) (D2 filtrate to D1 washer). Split-flow jump-stage countercurrent was the combination between these two previous approaches (D2 filtrate to E2 and D1 washers) (Turner et al., 2001). Shukla et al. (2012) also proposed a similar approach to split-flow jump-stage countercurrent. They used water cascade analysis to reduce water consumption and improve water efficiency at the bleaching section. They analyzed different parameters and found that adsorbable organic halides (AOX) are the critical limiting constraint for the reutilization of filtrates at bleaching sequences. However, water saving could be achieved by the reutilization of filtrate of each stage in the preceding stage or even in the stage before the preceding one (Shukla et al., 2012). It is important to stress that sometimes this strategy for water reutilization requires neutralizing or using an antichlor, such as SO_2, before the reutilization of bleaching filtrate. Other common water conservation projects in this department were the use of filtrate at wire cleaning and pump standpipe dilution, and the reuse of machine white water. In addition, the use of D0 filtrate on the pre-bleach washer has been receiving more attention recently (Mateos-Espejel et al., 2010b; Turner et al., 2001).

Several opportunities for water reduction at the pulp/paper machine have been identified by effective reutilization of white water. Another way to reduce water at this section was to reutilize the vacuum seal water. The opportunities for water reduction at the recovery loop can be summarized as the reuse of non-clean condensate from evaporation, the reuse of alkaline liquor, and vacuum pump seal water (Mateos-Espejel et al., 2010b; Mateos-Espejel et al., 2011a;

Mateos-Espejel et al., 2011c; Turner et al., 2001). To reuse the non-clean condensate of the evaporation section, the odour problem should be taken into consideration as well. There is also potential to recycle vacuum seal water to the vacuum pump. It has been proven by Houle at al. that 64% of seal water can be recycled if the temperature does not exceed 40°C (Mateos-Espejel et al., 2010b).

The process integration techniques, which have been discussed in previous sections, have been widely applied in the pulp and paper process to improve the water efficiency of both specific departments of the mill, such as the deinking plant (Koufos and Retsina, 2001) and paper machine (Jacob et al., 2002; Tripathi, 1996), as well as the overall process (El-Halwagi et al., 2003; Jacob et al., 2002; Mateos-Espejel et al., 2010b; Mateos-Espejel et al., 2011a; Mateos-Espejel et al., 2010d, 2011c). Mateos et al. (2010a, b), applied sequentially the Water and Thermal Pinch Analyses and saved 34% and 8.5% (14 MW) of water and steam, respectively. The changes in the water network also altered the thermal composite curves and reduced the minimum heating requirement (MHR); however, they increased the minimum cooling requirement (MCR). El-Halwagi et al. (2003) have applied water pinch (cumulative mass load of contaminant versus cumulative flowrate) for a P&P mill and regardless of the constraints on a real process lumped all of the sinks into four sinks with four levels of contaminant concentrations.

3.5 Equipment Performance Analysis

The process integration techniques are commonly applied with the assumption that all equipment and departments are working efficiently, but this is not always the case. Therefore, the benchmarking of existing equipment and departments can aid in identifying inefficiencies. The benchmarking is a comparison with other similar equipment or processes so as to determine inefficiencies from the stand point of water and energy consumption (Navarri and Bédard, 2008). For a reduction of water and energy requirements, the possibilities can be evaluated by means of improving housekeeping, modifying operating conditions or improving process controls, or through replacement of certain pieces of equipment by more efficient units. The number of potential projects will be very broad for evaluation (Navarri and Bédard, 2008; Paris, 2000). The energy savings that can be accomplished by these approaches are in the range of 5-15% from

opportunities identified using more conventional methods/projects, such as good housekeeping (steam traps and leaks, boiler and furnace tuning, cleaning of fouled heat exchangers, etc.), monitoring and targeting (M&T), and process modifications. This number may vary due to dependency on the attention that has been given to energy at the facility before these methods are applied, and depending on other factors, such as the complexity of the process, and the fouling potential of the materials being handled (CETC, 2003). Similar to energy, water consumption and effluent production also should be considered in total site analysis (Savulescu and Kim, 2008). The payback period for different projects varies from as little as a few days, for some good housekeeping projects, to several years for some equipment replacement projects (Navarri and Bédard, 2008). Therefore, the performance of individual equipment and department should be included as a part of each energy efficiency enhancement and water management program.

Mateos et al. (2007) conducted a study on evaporators using the dual representation method to identify thermodynamic and technological problems. They found that steam consumption at evaporation could be decreased by a reduction of heat loss. They also studied individually the cogeneration of a pulp and paper mill to identify its inefficiency (Mateos-Espejel et al., 2009). They found that the biomass boiler of the mill had low efficiency (43%) that was far below the typical Canadian average of 65%. They proposed to replace the biomass boiler with a new one (Mateos-Espejel et al., 2011c). Ala-Kaila and Poukka (2003) investigated the possibilities of fractional filtrate configurations for the bleaching section. They proposed that the fractional filtrate configurations could potentially increase washing efficiency or the recycling of chemicals. Bryntesson et al. (2002) explored the washing conditions in a chemical pulp mill and analyzed the effect of a Compact Press washer on manufacturing costs, quality of product, and environmental impact. They found that the Compact Press washer compared to other types of washers has a higher displacement ratio, washing consistency, and less space for installation. Castro and Doyle (2004) developed a dynamic model to be used as a diagnostic source of the Kraft pulp mill control system. Jansson (2009) investigated the performance of the control system of the digester. Bhutani et al. (2012) investigated the potential of energy saving at the pulp/paper machine. They proposed some measures for this reason: optimizing set points of the control system of steam dryers, a reduction in process variations. They found that 10-15% of steam consumption at the dryer of the paper machine can be saved by these measures. Afshar et

al. (2012) also proposed further water removal prior to drying by analyzing the effects of vacuum in the forming sections of paper machine. They found that 20% of steam can be saved by reducing 5% of moisture in the sheet to dryer and also 1.34% of dryer steam consumption can be diminished by eliminating over drying of the sheet. In the case of the steam plant, it has been suggested to flash the boiler blowdown water in a flash tank to recover its clean low pressure (LP) steam, and then this LP steam could be used in deaerators or make-up water heaters (NCDENR, 2004).

3.6 Energy Upgrading

Energy saving can be obtained by internal heat recovery. However, there are large amounts of low quality heat available in process. This heat typically cannot be recovered by means of HEX networks. The PI tools to recover this heat are heat pumps. They are installed to upgrade the low potential heat at low temperature to high potential heat at high temperature (Bakhtiari et al., 2010a, b; Costa et al., 2009; Costa et al., 2004). There are two types of heat pumps: vapor recompression and absorption (Fig. 3-9). The vapor recompression heat pump (VRHP) consists of a closed loop with a carrying fluid (refrigerant). This fluid recovers the low potential heat (QE) from an evaporator (E) and transfers it to a condenser (C) at a quantity of QC. The heat pump driving force is the compressor, which is a pressure raising device (PRD) and is driven by an electrical motor or turbine (Bakhtiari et al., 2010a, b; Costa et al., 2009; Costa et al., 2004). On the other hand, absorption heat pumps (AHP) are emerging as a potential alternative to this mechanical device. The AHPs can upgrade low potential heat (QE) from the evaporator (E) by employing the effect of pressure (Fig. 3-10) on an absorption–desorption cycle to reach the temperature lift from the heat source to the heat sink (Bakhtiari et al., 2010a; Costa et al., 2009; Costa et al., 2004). In contrast to VRHP, they are thermally driven by heat (QG) to the generator (G) and can be operated with low electricity consumption (Mateos-Espejel, 2009). A two-component solution is circulated in this scheme to transfer the heat. In the low temperature processes, such as the Kraft process, the common solutions are H_2O/LiBr or H_2O/NH_3. The heat (QA+QC) that is released to the condenser (C) and absorber (A) and used in heat sink(s) has the same pressure and temperature (Fig. 3-10) (Bakhtiari et al., 2010a, b; Costa et al., 2009; Costa et al., 2004). In addition, a combination of streams can be considered as the heat sinks or heat sources (Bakhtiari et al., 2010b).

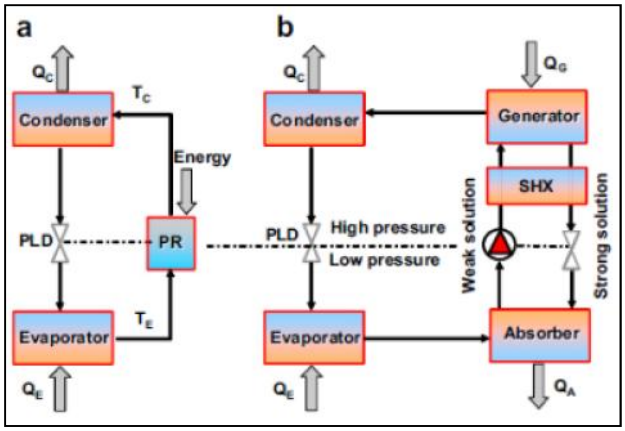

Fig. 3-9 - (a) vapor recompression heat pump (VRHP); (b) absorption heat pump (AHP) (Bakhtiari et al., 2010a)

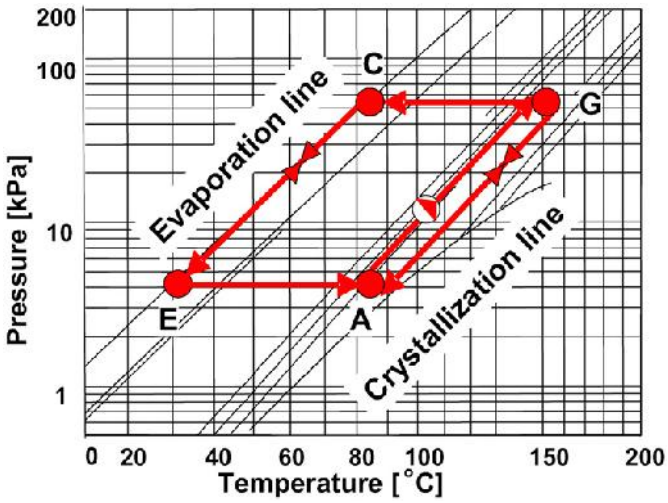

Fig. 3-10 - AHP representations in H2OeLiBr phase diagram (Bakhtiari et al., 2010a)

Bakhtiari et al. (2010a, b) presented a new methodology for the process integration of AHPs. They showed that even for a fully-optimized energy and water mill, there is still a potential for further utility savings. Several researchers showed how the composite curve diagrams can be used to position AHPs in the process as illustrated in Fig. 3-11 (Bakhtiari et al., 2010a, b; Dhole and Linnhoff, 1993; Maréchal and Kalitventzeff, 1997; Marinova et al., 2007). The low temperature heat source to be upgraded must be below the pinch point, while the high temperature heat source and the heat sink must be above it. Bakhtiari et al. (2010a) and Costa et al. (2009; 2004) studied the potential of heat upgrading using AHP in a Kraft mill. They proposed to assess the potential for the installation of AHP after developing the heat exchanger

network, because the heat pumps are typically more expensive than HEXs (Bakhtiari et al., 2010b).

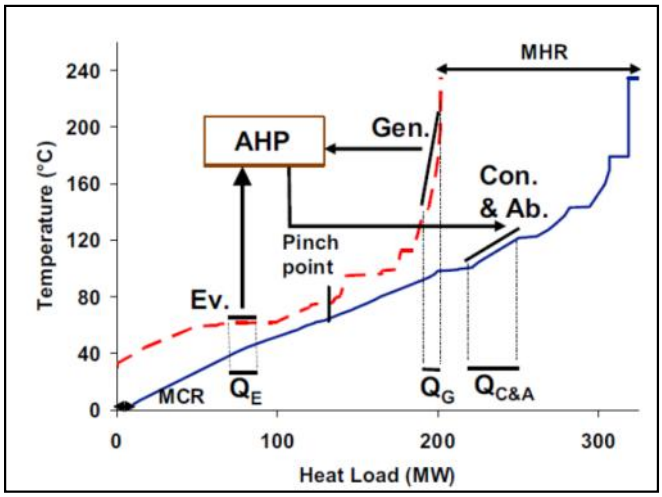

Fig. 3-11 - Appropriate positioning of an AHP (Bakhtiari et al., 2010a)

3.7 Energy Conversion

Energy conversion is the transformation of one type of energy into another of better quality or that is more useful (Mateos-Espejel, 2009). One form of this transformation is the conversion of steam into electricity by means of cogeneration so as to generate extra revenue. Cogeneration is a combination of heat and power (CHP) (Mostajeran Goortani et al., 2010). Pulp & paper is considered the largest industrial cogeneration capacity in Canada, however, there is still potential for more power generation if the total steam consumption decreases (CIPEC, 2008; Mateos-Espejel et al., 2010d).

There are two types of steam turbines that have been used for cogeneration: back pressure turbine and condensing turbine. The back pressure turbine is used to depressurize the high pressure (HP) steam of the boiler and produce medium pressure (MP) and low pressure (LP) steam for the process and generate electricity. In the condensing turbine, steam is exhausted under vacuum conditions to only generate electricity (Han et al., 2006; Moran and Shapiro, 2006). Steam is also partially condensed in the turbine and the remaining steam is condensed in the condenser (Han et al., 2006).

The back pressure turbine is installed when a boiler produces more than 1.36 t/h of steam and the difference between the pressure of the boiler steam outlet and the distribution network is more than 690 kPa (US.DOE, 2012).

There are several studies that have been dedicated to the proper installation of cogeneration. Sarimveis et al. (2003) developed a mixed integer linear programming (MILP) algorithm to minimize the cost of cogeneration in P&P mills. Bhattacharyya & Hien (2005) assessed the economic feasibility of cogeneration in P&P mills and considered the case of selling electricity to the grid. Marshman et al. (2010) presented an optimization algorithm for this reason in P&P mills and considered selling power and various scenarios for purchasing the fuel for the boilers. Cakembergh-Mas et al. (2010) also proposed an MILP optimization model to quantify the economic benefit of cogeneration in a Kraft mill. The results showed that cogeneration, including a single back-pressure turbine, has the shortest payback period (PBP) whereas the installation of two turbines can result in more power generation, higher profit, and a longer PBP. Mostajeran Goortani et al. (2010) evaluated the technical feasibility of cogeneration implementation in a Kraft mill. They found the same PBP as Cakembergh-Mas et al. (2010), between 0.8-0.9 years. Tahouni et al. (2012) considered the possibility of a gas turbine and a back pressure turbine to generate power and analyzed this CHP configuration using Aspen Plus software.

3.8 Trigeneration

Trigeneration is a combination of cogeneration and a heat pump (Fig. 3-12). The heat pump can be either VRHP or AHP. In trigeneration with AHP, the driving force of AHP is MP steam from a MP back pressure turbine (Hernández-Santoyo and Sánchez-Cifuentes, 2003; Marinova et al., 2007). This coupling has several advantages, such as being environmentally friendly because of high steam savings by AHP and lower electricity consumption compared to VRHP, generating more electricity using turbine, and supplying enough steam for the process (Marinova et al., 2007; Meunier, 2002). Cortes & Rivera (2010) performed an exergoeconomic study to optimize this configuration and lower the operating costs. Marinova et al. (2007) presented guidelines for the implementation of a trigeneration unit in a Kraft mill. They reported that trigeneration can reduce the net heat demand of the process and supply electricity to the grid. Nevertheless, the

investment required for this combination is high and should be examined carefully to decide whether it is profitable or not.

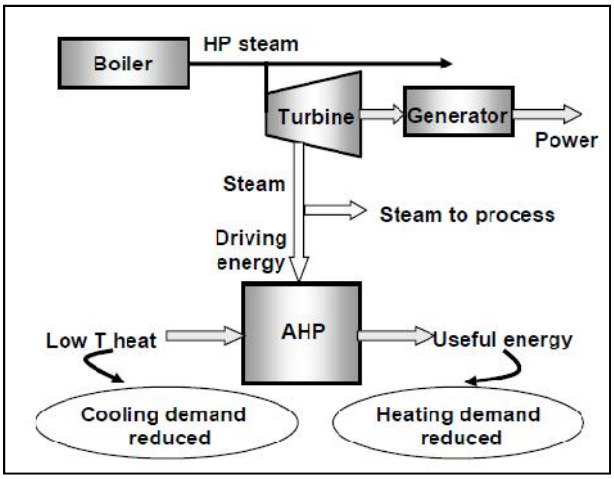

Fig. 3-12 - Schematic of the steam turbine and AHP - trigeneration unit (Marinova et al., 2007)

3.9 Selling Steam to the Local District

There are several options for using the excess steam, such as electricity generation using turbines and/or selling steam to the local district. Jonsson et al. (2008) conducted a study on the subject of selling steam to the local district from a Kraft mill. They showed that this option highly depends on the price of energy in the market and the total heat load. For example, if the total heat load to a district is small, this scenario is always beneficial while if it is medium or large, the market price of energy will indicate the optimal sale of heat. In addition, they showed that this scenario is always advantageous in CO_2 emission reduction. Axelsson & Berntsson (2005) also evaluated this potential and showed that selling the surplus heat to the local district is promising from an economy point of view, even with low energy prices. Kapil et al. (2012) also described the most important parameters for success in local district heating from wasted energy of a process. Marinova et al. (2008) conducted a feasibility study in district heating in a small town adjacent to a Kraft pulp mill in Canada. They showed the possibility of this option even for the harshest weather period of the year. Economic analysis also showed that district heating for half of the town can be economically attractive.

3.10 Combination of Different Process Integration Techniques

Mateos et al. (2010d, 2011c) developed a system interaction analysis (Fig. 3-13) that consists of six major steps: internal heat recovery, water reutilization, elimination of non-isothermal mixing (NIM), condensate recovery, energy upgrading by heat pumping, and energy conversion by turbine. They used different process integration tools, such as Thermal Pinch Analysis for internal heat recovery and energy upgrading and Water Pinch Analysis for water reutilization. Thermal Pinch analysis has been performed after applying each step to evaluate the effect on Pinch Curves and redesign the HEX network. This method requires plenty of effort to develop the HEX network; however, many steps can be easily combined. Mateos et al. (2011c) also presented the Unified methodology to propose guidelines for implementing the identified projects for a Canadian Kraft mill considering their technical and economic constraints.

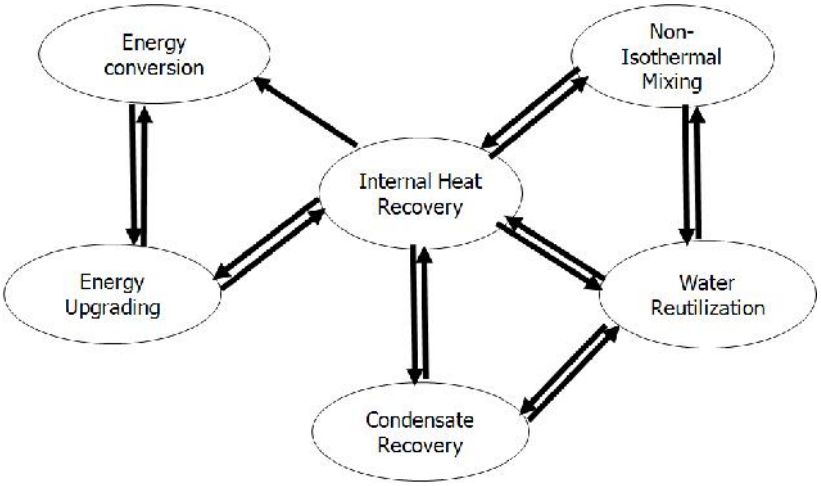

Fig. 3-13 - System interaction analysis (Mateos-Espejel et al., 2010d)

3.11 Synthesis of the literature

The main incentives for energy and water savings are reduction in manufacturing costs and negative environmental impacts, increasing power generation capacity and creating extra revenue for the process. The main potential for improvement can be summarized as follows:

- Providing a means to characterize and benchmark existing processes so as to determine the areas of water and steam inefficiencies.

- Providing a systematic technique to simultaneously analyze the water production and utilization, filtrate reutilization, and related steam networks so as to reduce steam and water consumption. It should also consider the constraints of the system and non-isothermal mixing inefficiency. The technique should provide a practical approach and rules for filtrate reutilization.
- Providing a systematic technique to diagnose the inefficiencies within existing equipment and departments of the process.
- Providing a systematic technique to redesign the existing HEX network (HEN) of a water-based process considering the constraints, existing HEN, and non-isothermal mixing (NIM). This technique should provide practical ways to straightforwardly design HEN.
- Providing a methodology to combine different PI techniques so as to achieve the maximum possible steam and water savings, biggest reduction of effluent production and CO_2 emissions, and highest net profit with the shortest payback period.

3.12 Specific Objectives

Based on the synthesis of literature, the specific objectives of this thesis are the following:

- To develop a benchmarking technique to identify preliminary potential water and steam savings and apply the technique on Kraft mills.
- To develop a technique to simultaneously analyze water and steam networks so as to reduce steam and water consumption by redesigning the existing water production and utilization and also filtrate reutilization networks and apply the technique on Kraft mills.
- To develop a technique to analyze and diagnose the existing equipment and departments to enhance their energy and water efficiency and apply the technique on Kraft mills.
- To develop a technique to redesign the existing HEX network of a water-based process to significantly improve the heat recovery system and apply the technique on Kraft mills.
- To develop a methodology to combine different process integration techniques to maximize the steam and water savings and also to propose a strategy for implementing the identified projects and apply the methodology on Kraft mills.

3.13 Overall Methodology Approach

The methodology consists of five steps (Fig. 3-14). Utility system, characterization, benchmarking and diagnosis are in chapter 4 of the thesis. Thermal energy and water management and recovery are included in chapters 5-7. Chapter 8 presents the overall methodology.

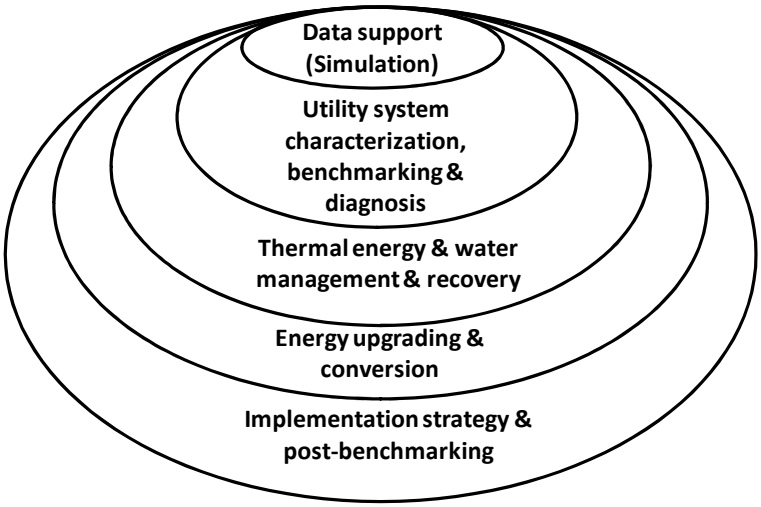

Fig. 3-14 – Overall methodology

In the inner ring, the process simulation of three Canadian Kraft mills has been developed in the CADSIM Plus platform. These simulations focus on steam and water consumption and are used to extract data for analyses and also incorporate the proposed modifications.

The second ring is associated with the characterization of existing processes from the standpoint of water and steam consumptions. The case studies are benchmarked against reference data and also compared with each other.

The third ring is the core of the methodology where the steam and water saving projects are identified using PI techniques that are developed and presented in chapters 5-7.

The fourth ring evaluates the possibility for heat pumping and a cogeneration system.

The outer ring prioritizes the identified projects of the third and fourth rings for implementation.

In this work, the main software used are the following:

- CADSIM Plus, which is a Canadian software specializing in the P&P process.
- Aspen Plus to simulate the generic example of SEWNA and also cogeneration and trigeneration
- Aspen Energy Analyzer to design the HEX network.
- Excel to extract data from simulation, perform water and energy analysis, the sizing of pipes and HEXs, and economic calculations.

3.14 Case Studies

The study is based on three Canadian Kraft mills during winter conditions as these are the harshest conditions during the year with peak steam consumption.

Schematics of the three studied mills are shown in Fig. 3-15. The mills are geographically distributed in Canada, representing a wide spectrum of configurations, products, and raw materials, and are hereby identified as Mill A, B, and C. Mill A is a dissolving Kraft mill that consumes hardwood and produces, at its maximum capacity, 750 air dried tons per day (Adt/d) of dissolving pulp. The dissolving pulp is pure cellulose and sold as a precursor to produce other materials, such as rayon. Mill B comprises two separate lines. Line 1 and 2 manufacture respectively 805 and 960 Adt/d of Kraft paper pulp from softwood. The two lines are interconnected through digesting and the pulp machine. Mill C is a mixed Kraft and mechanical paper mill with softwood as the raw material. This mill manufactures an average of 700 Adt/d of paper from 40% Kraft paper pulp and 60% mechanical pulp. The mechanical pulping of mill C is primarily an electricity consumer and was not taken into account for thermal energy analysis. The main characteristics of these mills are presented in Table 3-1.

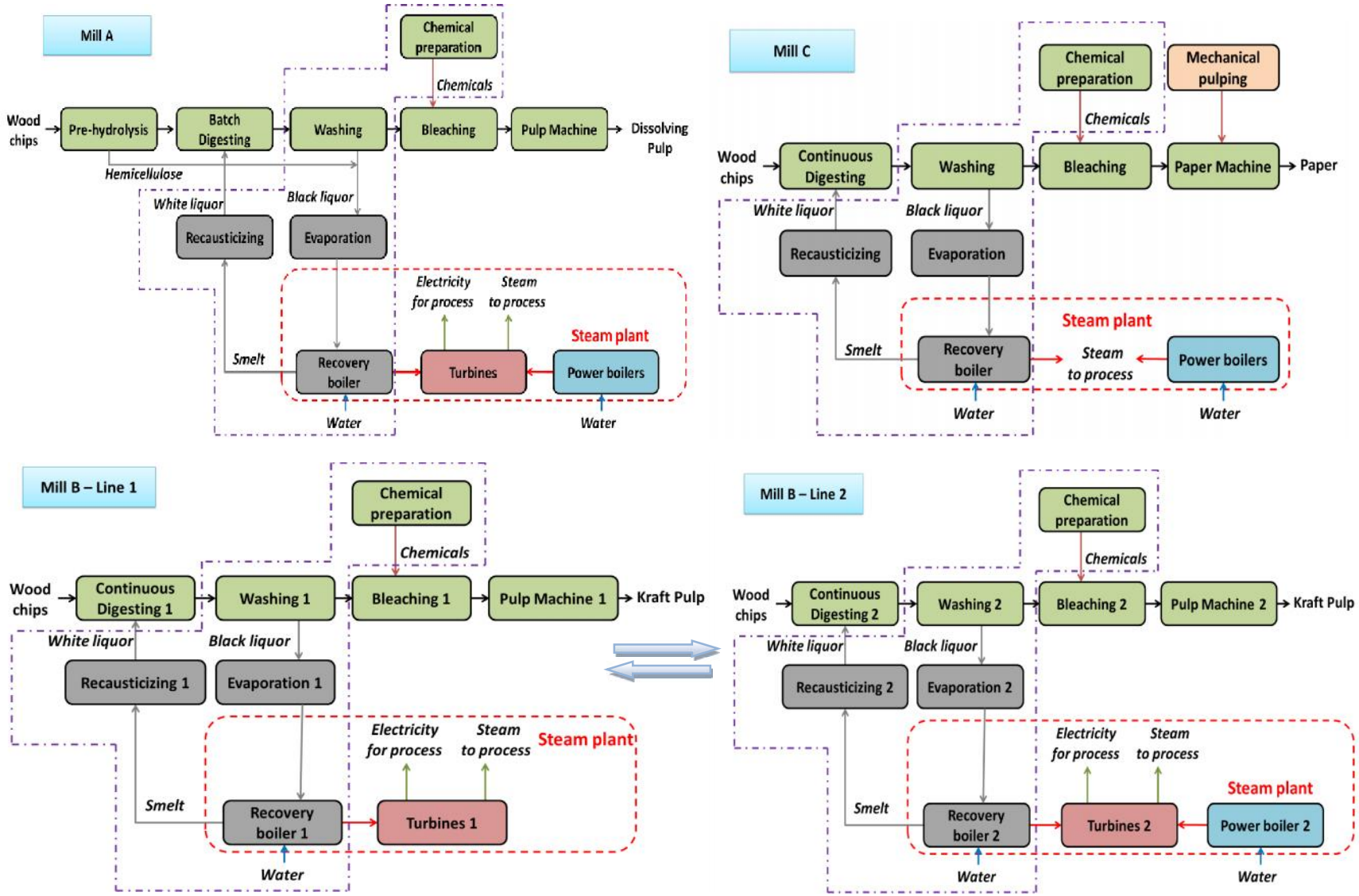

Fig. 3-15 - Simplified diagram of the three studied Kraft mills – the area between the dashed-dotted lines are similarities

Table 3-1 - Main characteristics of the three mills

	Type of product	Total Production (Adt/d)	Steam production (MW)	Steam consumption (MW)	Electricity generation (MW)	Electricity consumption (MW)	Water consumption (m^3/h)	Effluent production (m^3/h)
Mill A	*Dissolving* Kraft pulp – A series of *Batch* digesters	750	275†	250†	19.7	19.4	2480	2450
Mill B – Line 1	Kraft *paper* pulp – *Continuous* digester	805	173‡	183‡	22.6	-	1540	1530
Mill B – Line 2	Kraft *paper* pulp – *Continuous* digester	960	335†	265†	26.3	-	1410	1260
Mill B– Whole mill	Kraft *paper* pulp – *Continuous* digester	1765	508†	448†	48.9	51.6	2950	2790
Mill C	Kraft paper – *Continuous* digester	700	116	112	-	4.2	1760	1720

†the difference between steam generation and consumption is due to heat loss in the cogeneration system
‡a portion of steam from line 1 of mill B is sent to line 2

The differences between the mills reside mainly in the type of the final product, the bleaching stages, the digesting section, and the steam plant (Fig. 3-15). Mill A produces dissolving Kraft pulp, which is almost pure cellulose. A pre-hydrolysis stage is positioned before digesting to separate most hemicelluloses, considered as the major impurities in the final product of Kraft paper pulp. In addition, the digester is a series of batch ones while the two other mills have a continuous digester. The rest of the process of mill A is similar to mill B. Both lines of mill B manufacture Kraft paper pulp whereas mill C produces the same product from the Kraft line but it is mixed with mechanical pulp and the final product is coated paper. The bleaching section of mill A and both lines of mill B consist of five stages ($D_0EopD_1E_2D_2$) while mill C only has the first three stages (D_0EopD_1). The main characteristics of the steam plants of the three mills as the main energy supplier to the process are presented in Table 3-1. The steam plant of mill A consists of one recovery boiler and one bark-bunker oil power boiler producing a total of 275 MW of high pressure (HP) steam. This steam is directed to the cogeneration system with two back pressure turbines to produce 62 MW of medium pressure (MP) steam, 175 MW of low pressure (LP) steam, and 19.7 MW of electricity. Moreover, 13 MW of HP steam is directly used in the process. Line 1 of mill B produces 173 MW of HP steam from its own recovery boiler and receives 66 MW of HP steam from line 2. The HP steam is fed to two back pressure turbines so as to generate 52 MW of MP and 131 MW of LP steam and 22.6 MW of electricity. In line 2, there are one recovery boiler and one bark power boiler that produce 335 MW of HP steam. Similarly, the HP steam is used at cogeneration consisting of two back pressure turbines to produce 66 MW of MP and 199 MW of LP steam and generate 26.3 MW of electricity. Contrary to the two other mills, at the steam plant of mill C, due to a lack of cogeneration, 116 MW of MP steam is produced from one recovery boiler and one bark and three natural gas power boilers. The pressure release valve (PRV) is employed to produce 34 MW of LP from MP steam that makes the steam plant of this process less efficient compared to the two other mills. The remainder of MP steam is directly used in the process.

4 CHAPTER 4: BENCHMARKING AS A MEANS TO IDENTIFY WATER AND STEAM SAVINGS

The main objectives of this chapter are divided into two parts. The first part is to benchmark the mills with current practices to diagnose areas of inefficiencies. The second part is to compare the case studies with each other to illustrate their similarities and differences. Furthermore, the advantages and disadvantages of each mill are investigated. The advantages of one mill can be proposed as a potential for water and energy savings measures in other mills.

In the next sections, the technique to perform benchmarking is presented and the results of applying this technique to the cases are shown.

4.1 Benchmarking Technique

The technique to perform benchmarking is illustrated in Fig. 4-1 and includes three successive steps to primarily diagnose the area of inefficiency and identify the preliminary potential for steam and water savings of each case study. Each step is explained in the following sections and the results obtained from the application to the three mills are also presented.

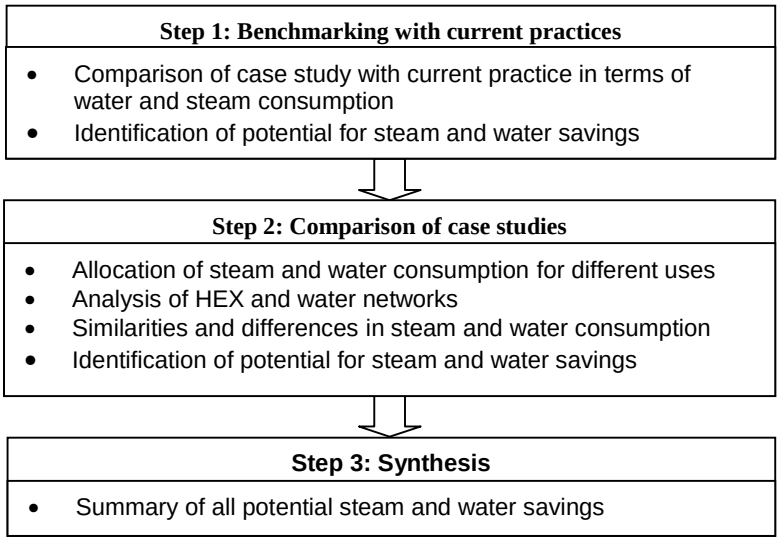

Fig. 4-1 -Steps of benchmarking methodology

4.1.1 Step 1: Benchmarking with current practices

Benchmarking is carried out by comparing the mill with current practices from three perspectives:

- Steam consumption
- Water consumption
- Effluent production

The steam consumption of the principal steam users and the complete mill is benchmarked against the reference data from the Paprican survey (CIPEC, 2008). The water consumption and effluent production of the mills are benchmarked against the latest available reference data. The reference data for water consumption of different departments has been extracted from the published data for average mills of 1960s and 1980s designs (Johnston et al., 1996; Turner et al., 2001). The reference data for effluent production of different departments has been published for average mills of 1960s, 1980s, and 1990s designs (Chandra, 1997).

4.1.2 Step 2: Comparison of case studies

The specific characteristics of the mills can be divided into four different categories:

- Allocation of water consumption and effluent production
- Allocation of steam consumption to different usages
- HEX network
- Water network

The allocation of water consumption and effluent production of different departments of the mills are compared with each other and also to the reference data. This study indicates deviation from typical patterns of water consumption and effluent production in each department. It also suggests the similarities and differences among the mills whereas some of the differences could be advantageous and used as potential for improvement in other mills.

The allocation of steam consumption to different usages can give a clear picture on the area of high steam consumption. Similar to water consumption, it demonstrates the similarities and

differences and explains the causes of the differences and suggests some potential for improvements.

Analysis of the heat exchanger (HEX) network of the mills reveals the main features of the mills in their heat recovery system. Presenting the similarities and differences could suggest an area for improvement in heat recovery system.

Finally, the similarities and differences among the mills in their water networks are used to identify the preliminary potential of water savings that would also affect the steam consumption and effluent production.

4.1.3 Step 3: Synthesis

At the synthesis step, the main results of the two previous steps are analyzed to determine the potential for improvement, both for steam and water savings while decreasing effluent production.

4.2 Results

4.2.1 Step 1: Benchmarking with current practices

The benchmarking of steam and water consumptions as well as effluent production is shown in Fig. 4-2 to 4-7.

4.2.1.1 Steam consumption

Figure 4-2 illustrates the results of benchmarking for mill A. This mill is benchmarked against the data for Kraft *paper* pulp with a batch digester due to a lack of data for benchmarking against Kraft *dissolving* pulp with a batch digester. It is possible to divide the mill into two parts for benchmarking: the pre-hydrolysis and the Kraft *paper* pulp with batch digester. The steam consumption of batch digesting is less than the 75th percentile of Canadian mills and, hence, is considered as energy efficient. This value for bleaching and chemical preparation and the pulp machine is below the median Canadian one although there is still potential to reduce these values by means of process integration tools. The steam consumption of evaporation is higher than the 75th percentile of Canadian mills because of the nature of the dissolving Kraft process. In this

process, the separated hemicelluloses from the pre-hydrolysis step are mixed with the weak black liquor from the washing department (Fig. 3-15), so the total quantity of black liquor increases. This causes a larger steam consumption compared to evaporation of Kraft paper mills that just receive the black liquor from the washing section. In the other parts of the mill, such as the steam plant, water production, recausticizing, or heating the building, the total steam consumption is considerably larger than the 75th percentile of Canadian mills. The steam consumption of the portion of Kraft *paper* pulp with batch digester is also much higher than even the 75th percentile of Canadian mills. This shows the major opportunities to save steam via the application of process integration techniques.

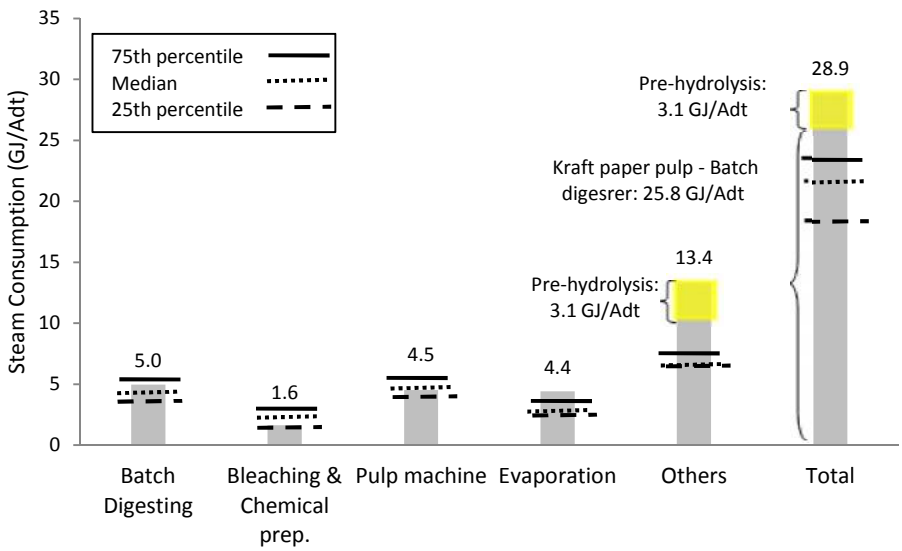

Fig. 4-2 -Steam consumption of main department and complete mill – Mill A (Dissolving Kraft pulp & batch digester)

Figure 4-3 benchmarks the steam consumption of line 1, line 2, and the whole mill B against the reference data. For the continuous digesting of line 1, this parameter is lower than the 25th percentile while for line 2 it is much larger than the 75th percentile and for the whole mill is between the median and 75th percentile. The steaming vessel is a piece of equipment where live and non-clean flashed steam are injected to remove air from wood chips (Smook, 2002) and soften the wood prior to the digester. The high steam consumption of line 2 is explained by the fact that non-clean flashed steam from the digesting of line 2 is sent to the steaming vessel of line 1, hence the live steam requirement for this equipment at line 1 is significantly reduced whereas the steaming vessel of line 2 requires a large quantity of live steam. However, in the whole mill

for this department, there is a trade-off between high steam consumption at line 2 and low steam consumption at line 1. The bleaching department consumes a small quantity of steam although there is still potential for reduction by means of process integration. The high steam consumption of the pulp machine for both lines is largely due to the utilization of low temperature water (40-65°C) at the pulp machine and the high temperature of the exhaust air at the dryer outlet (132°C). This gives a considerable opportunity to save steam in this department. The evaporation section of line 2 consumes a substantial amount of steam compared to typical Canadian mills because of employing a black liquor (BL) concentrator to concentrate strong BL from 47% to 68% of dissolved solid using live steam. However, in line 1 and for the two other mills, a cascade concentrator has been installed to recover the heat of the recovery boiler (RB) stack gas. The total steam consumption of the whole mill is close to the 75th percentile and similar to mill A, there is still potential to save steam.

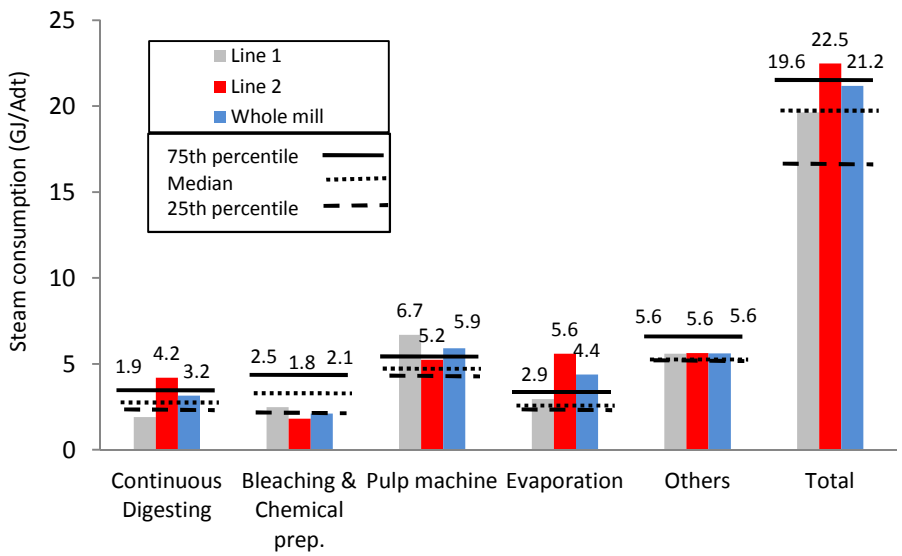

Fig. 4-3 - Steam consumption of main department and complete mill – Mill B (Kraft paper pulp & continuous digester)

Figure 4-4 presents the benchmarking results of steam consumption for mill C. Contrary to the two other mills; the steam consumption of the digesting department is much higher than the 75th percentile. Consequently, the identification of saving potential requires in-depth analysis of the equipment of this department. This value for bleaching and chemical preparation and evaporation is reasonable. The steam consumption at the paper machine (PM) is larger than the 75th percentile because water at low temperature is supplied to the PM and causes the low

temperature of white water that leaves the machine. This white water is recycled to the PM and to maintain its temperature, a significant amount of steam is injected into the white water tank. This steam can be reduced or removed by providing higher water temperature to the PM. The total steam consumption of the mill stands above the 75th percentile of Canadian mills and, therefore, there is room for improvement.

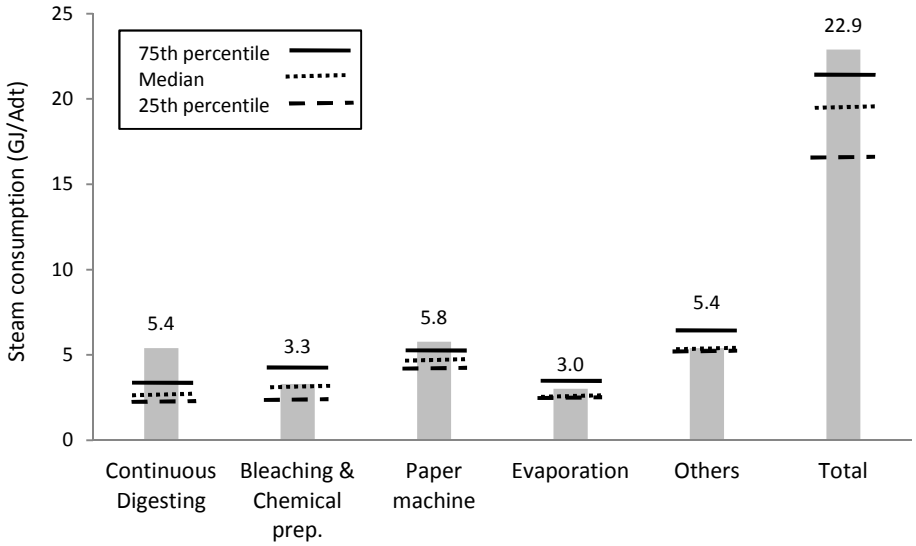

Fig. 4-4 - Steam consumption of main department and complete mill – Mill C (Kraft paper & continuous digester)

4.2.1.2 *Water consumption and effluent production*

Figure 4-5 depicts areas of large water consumption and effluent production for mill A in comparison with reference data. Washing, the pulp machine (PM), and recausticizing consume significant amounts of water compared to mill designs of the 1960s and 1980s (Fig. 4-5a). Correspondingly, washing and recausticizing discharge large quantities of effluent (Fig. 4-5b). This suggests poor countercurrent water reuse at washing although almost all of the produced white water from the PM is reutilized in the process and causes low effluent production at PM. This white water is mainly used in the bleaching department that shows low water consumption compared to reference data. The total water consumption of this mill stands above the 1960s mill designs, which give a good opportunity for improvement by means of process integration.

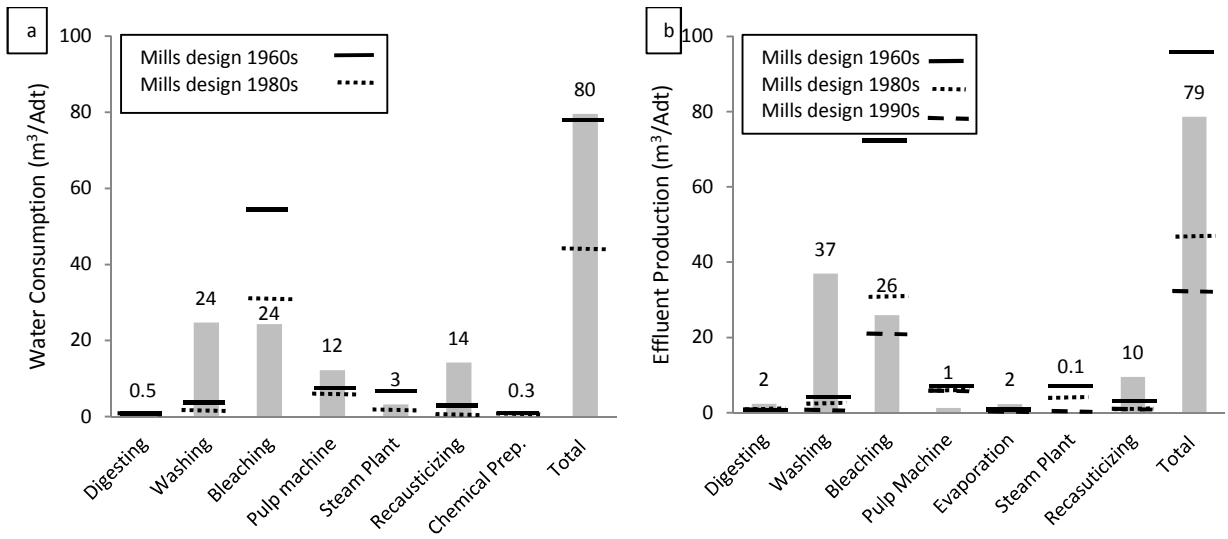

Fig. 4-5 - (a) Water consumption and (b) effluent production of Mill A

Figure 4-6 indicates that both lines of mill B integrate well from the standpoints of water consumption and effluent production. The only areas that may require further integration for reducing their water consumption are the washing department of line 1, the pulp machine of both lines, and recausticizng. These two lines are also integrated in some parts, for example, a portion of produced white water at the pulp machine of line 2 is sent to the pulp machine of line 1 and that is the reason for non-corresponding total water consumption and effluent production in line 2. In this mill, there is not much expectation to decrease water consumption and effluent production.

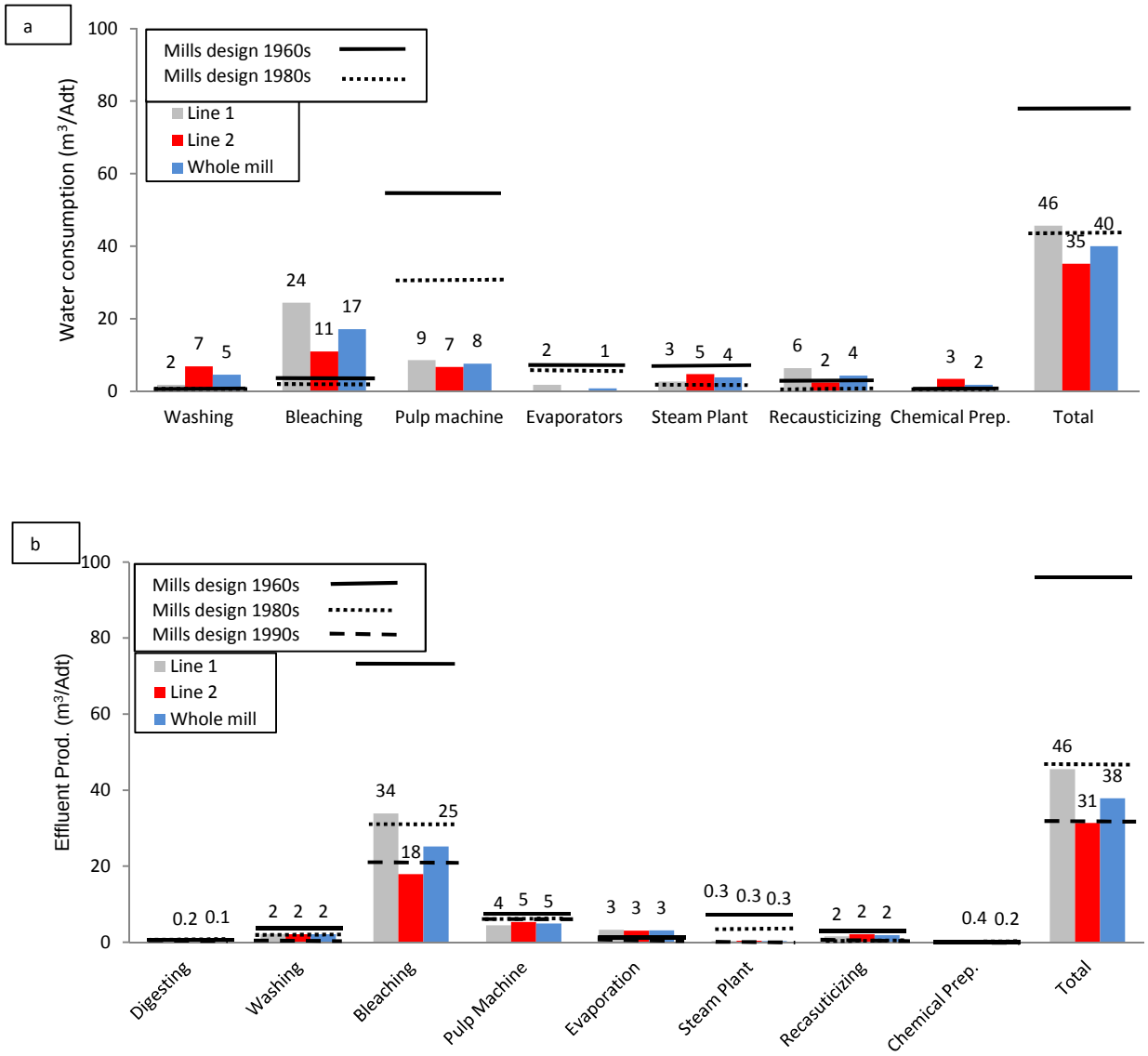

Fig. 4-6 - (a) Water consumption and (b) effluent production of Mill B

Figure 4-7 displays that the water consumption and, consequently, the effluent production of the washing and paper machine (PM) are considerably high for mill C. The main reasons, at the washing department, are poor counter-current water reuse and also the utilization of hot water to maintain the temperature of the washer filtrate tank at a required value. The white water is not reutilized efficiently in other departments, causing a large effluent production at the PM. Therefore, applying process integration could significantly reduce the water consumption and effluent production in this mill. It should be noted that total water consumption and effluent

production are 1760 and 1720 m^3/h (Table 3-1), but in Fig. 4-7, they are different. The reason is that the basis for the calculation of water consumption in m^3/Adt in digesting, washing, bleaching, steam plant, and chemical preparation is total Kraft production (280 Adt/d) while the basis for the paper machine is the total mixture of Kraft and mechanical production (700 Adt/d) and for mechanical is the total mechanical pulping production (420 Adt/d).

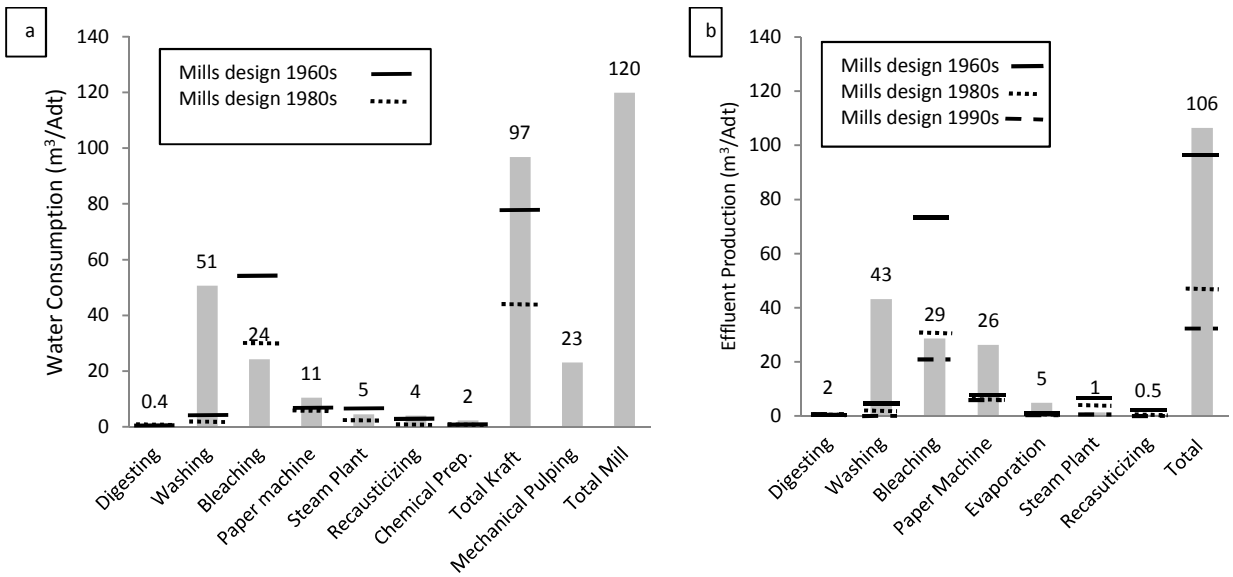

Fig. 4-7 - (a) Water consumption and (b) effluent production of Mill C

4.2.2 Step 2: Comparison of case studies

4.2.2.1 *Allocation of water consumption and effluent production*

The allocation of water consumption and effluent production of different departments is shown in Fig. 4-8 and 4-9. These figures indicate that the share of water consumption and effluent production of bleaching accounts for around 70% of total water consumption and effluent production for mills designed between the 1960s and 1990s. This proportion has not been changing over time; however, its quantity has been continuously reduced. The proportion of water consumption in steam plants has decreased from the 1960s to 1980s due to more attention for returning clean condensate to the steam plant. On the other hand, at the pulp/paper machine, the proportion of water consumption has increased. However, the water consumption at the pulp/paper machine has not changed due to the essential use of clean water at the end of the pulp line. Correspondingly, by decreasing the total water consumption at different departments,

similar to water consumption, the share of effluent production at the pulp/paper machine has considerably risen.

Analyzing the proportion of water consumption and effluent production at mill A in comparison with reference mills of the 60s, 80s, and 90s and also mills B and C indicate that this mill consumes large amounts of water and generates significant volumes of effluent in its washing and recausticizing departments (Fig. 4-8 & 4-9). Therefore, these two departments could be the main areas for water savings. These results are consistent with the results of water benchmarking. In addition, a low proportion of effluent production at the pulp machine (PM) could be an indication of a high level of white water reutilization at the washing, bleaching, and PM departments.

Similar observations about mill B (Fig. 4-8 & 4-9) suggest that although the total water consumption of the mill is close to that of the 1980s mill designs, the recausticizing and pulp machine of both lines and the steam plant and washing department of line 2 do not follow the pattern of those mill designs. Thus, the largest potential for water saving resides in these parts of the mill. The proportion of effluent production of the evaporation department on both lines compared to mill designs of the 60s, 80s, and 90s and mills A and C also implies that the non-clean condensates from the evaporation sections are not reutilized efficiently. This water can be used at the recausticizing and washing departments to save water and reduce the share of effluent production of evaporation as recommended by several studies (Mateos-Espejel et al., 2010b; Turner et al., 2001).

Mill C uses a large volume of water on the Kraft side and generates a large quantity of effluent compared to both mills A and B. The pie chart of Fig. 4-8 for mill C shows that the proportion of water consumption at washing is substantial compared to other mills. However, the bleaching consumes less water in comparison to other cases. The pie chart of Fig. 4-9 for mill C shows a large proportion of effluent production at washing and the paper machine compared to other cases. These results are identical to the ones obtained in the benchmarking sections and so the main possible areas for water savings could be at the washing department and the reduction of effluent could be at the paper machine by improving the reuse of its effluent (white water) at the bleaching and washing.

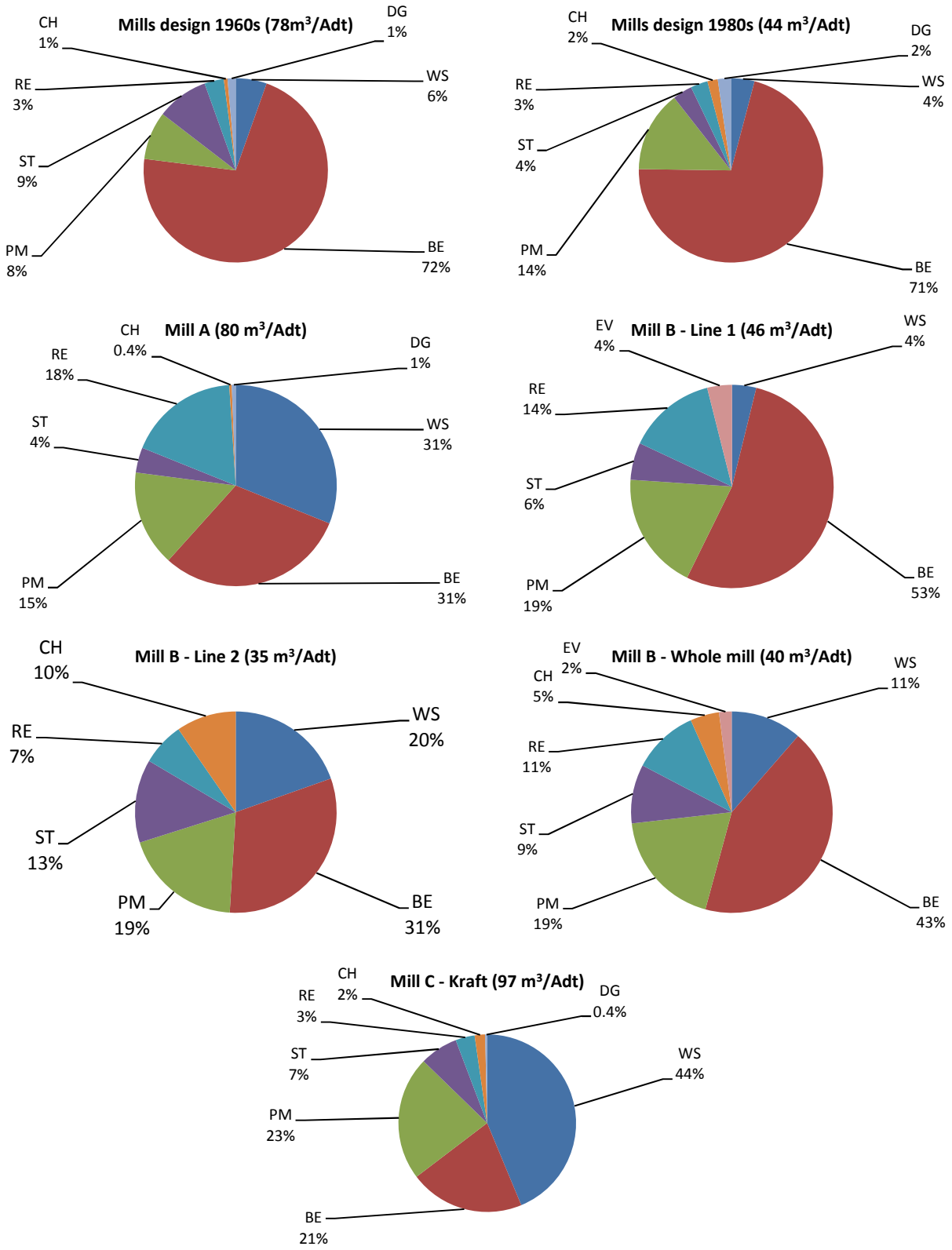

Fig. 4-8 - Allocation of water consumption for different departments (WS: washing, BE: bleaching, PM: pulp/paper machine, ST: steam plant, RE: recausticizing, CH: chemical preparation, DG: digesting, EV: evaporation)

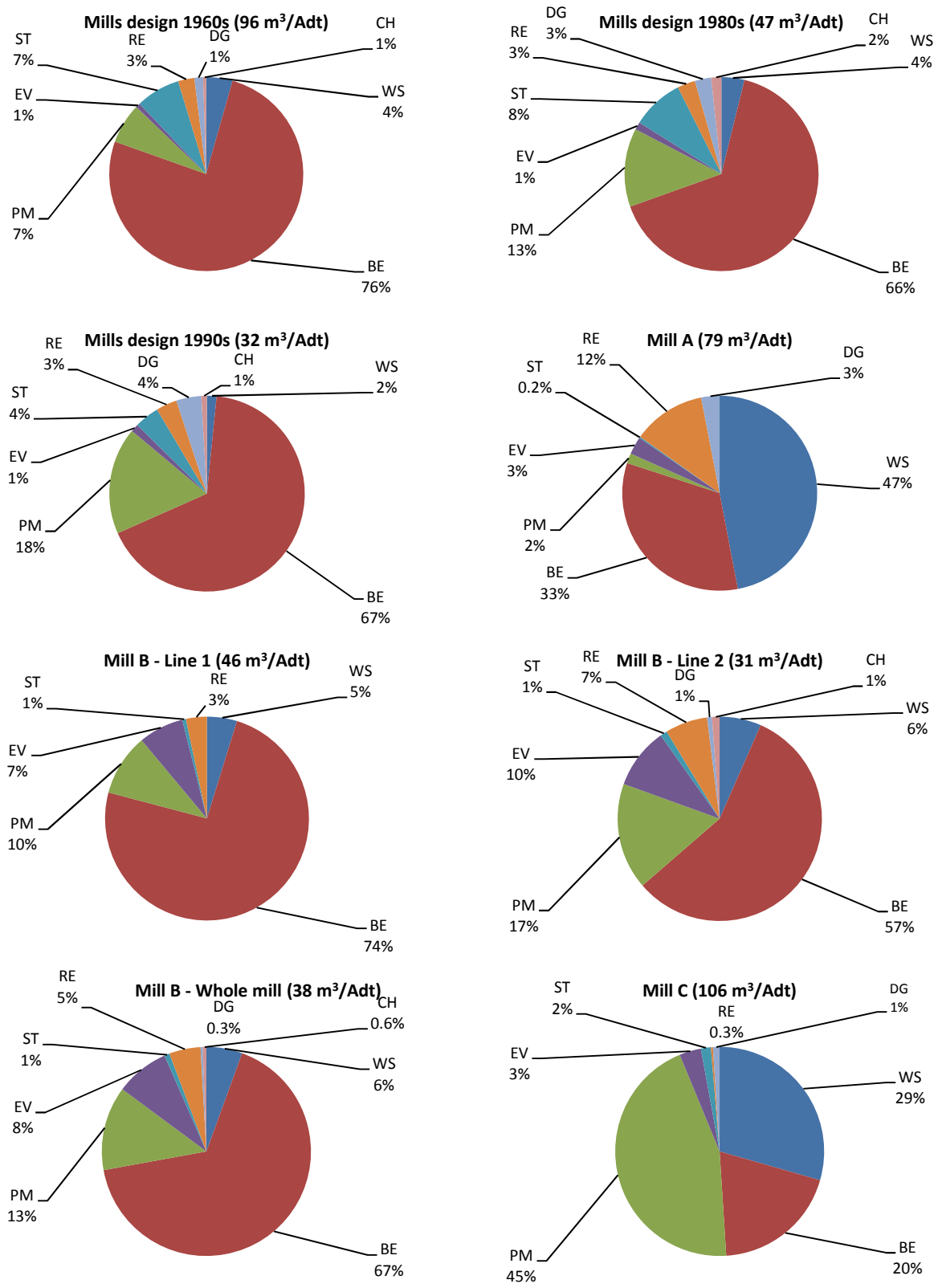

Fig. 4-9 - Allocation of effluent production from different departments (WS: washing, BE: bleaching, PM: pulp/paper machine, ST: steam plant, RE: recausticizing, CH: chemical preparation, DG: digesting, EV: evaporation)

4.2.2.2 *Allocation of steam consumption for different usages*

The allocation of steam consumption for different usages in the three mills is exposed in Fig. 4-10. The pie charts show that the main steam users are digesting, evaporation and black liquor (BL) heating, and drying, which consume between 35 to 56% of the total steam. Due to equipment constraints, steam cannot be reduced using process integration techniques, however, the performance of each of these pieces of equipment requires further individual investigation to identify the possible inefficiencies and propose measures to correct them. The graphs also display that the steam consumption for water heating and process and non-process air heating accounts for 13-22% of current consumption. This could be reduced or even eliminated completely by more efficient heat recovery via applying process integration. The deaerator and injection points in the pulp line consume 14% at the dissolving Kraft pulp mill (mill A) and between 30-36% at Kraft paper pulp mills (mill B and C). The main reason for the high steam consumption at the deaerator of mill C and both lines of mill B is the utilization of fresh water ($2^{o}C$) and warm water ($31^{o}C$), respectively, as makeup water at their deaerator. The main reason for high steam injection in the pulp line of mill C is inefficient water reutilization and also the utilization of low temperature water at the pulp line. For the case of mill B, with low water consumption, the expectation is to have low steam injection in the pulp line, but the share in both lines is large. The main reason is that similar to mill C, water at low temperature is used at line 2 and sometimes fresh water ($2^{o}C$) is used in the bleaching section where the major steam injections are carried out. Therefore, it can be expected that by applying process integration, several potentials for steam savings at both the deaerator and steam injection points of the pulp line could be identified.

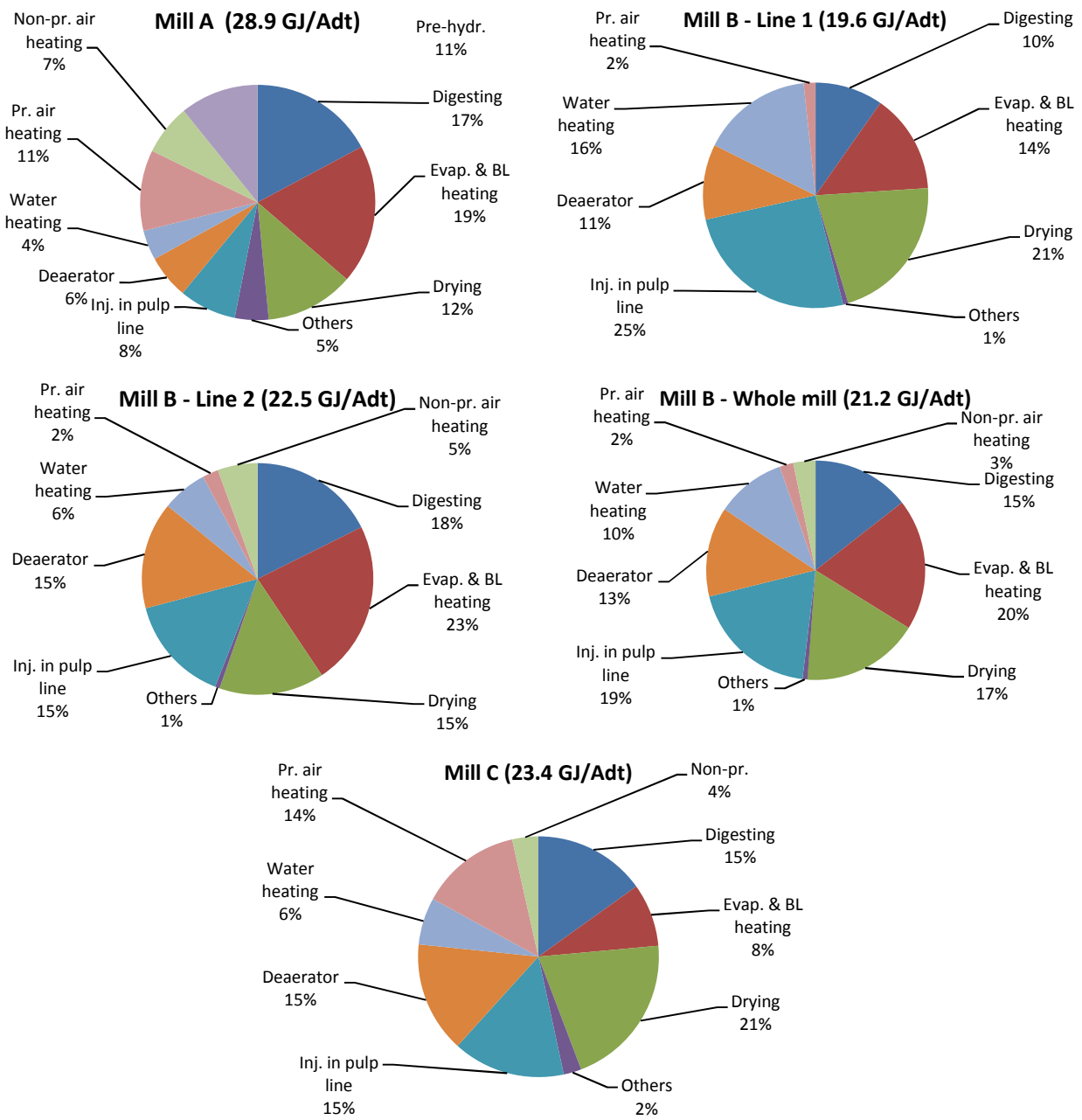

Fig. 4-10 - Allocation of steam consumption to different usages. (Pr.: process, Evap.: evaporation, BL: black liquor, Inj.: injection, Pre-hydr.: pre-hydrolysis)

4.2.2.3 HEX network

The specific characteristics of the mills regarding the existing heat exchanger network are summarized in Table 4-1. The analysis reveals the similarities and differences for the heat recovery system of the three mills. It could also help to channel the efforts into taking advantage of the positive characteristics and avoiding the negative ones. For example, the higher the

temperature of the smelt tank, the larger the potential for the installation of a green liquor cooler and heat recovery. In the case of mill C, the temperature of the smelt tank is 75°C, so the steam heater is required to reheat the green liquor and there is no potential for heat recovery. There are also several heat recovery schemes to heat up water and air using effluent of the pulp line, stack gas of boilers, and exhaust air of dryers. The stack gas of the recovery boiler is also used to concentrate further the black liquor after the evaporation system. In addition, it should be noted that the higher the temperature of air to boilers and dryers, the higher the boilers' efficiency, and the lower the steam consumption in the dryer. These advantageous approaches for heat recovery and also air supply to the main equipment could be helpful to reduce steam consumption and improve the energy efficiency of the process.

Table 4-1 -Specific characteristics of HEX network of three mills

HEX network characteristics	Impact	A	B1	B2	C
Installed HEX to recover the heat of bleaching effluent	Lower steam consumption for hot or warm water production				√
Using green liquor cooler (High temp. at smelt tank ~100°C) at recausticizing	No need for steam heater to reheat the green liquor	√	√	√	
Using wet scrubber to clean and recover the heat of RB stack gas	Lower steam consumption for hot or warm water production	√			√
Using RB stack gas at black liquor cascade concentrator	Lower steam consumption to concentrate the BL	√	√		√
Air economizer at power boiler (PB) to produce high temperature air	Lower steam consumption for air preheating	√			√
Water economizer at dryer	Lower steam consumption for hot or warm water production	√	√		√
Air economizer at dryer	Lower steam consumption for air preheating	√	√	√	
Preheat the air at dryer for recovery boiler (RB)	Lower steam consumption for air preheating (no distance barrier)	√			
Air to boilers at high temperature (>160°C)	Larger boiler efficiency	√			√
Air to dryer at high temperature (>80°C & <100°C)	Lower steam consumption at dryer		√	√	√

4.2.2.4 Water network

The specific characteristics of the mills' water networks and the similarities and differences are presented in Table 4-2. This table can help to begin identifying potential areas for saving water that would also affect the steam consumption. For example, high temperature water is utilized at the pulp line of mill A and line 1 of mill B resulting in lower steam consumption at the bleaching sections of these two mills compared to mill C (Fig. 4-2 to 4-4). However, line 2 of mill B consumes a smaller amount of steam (1.8 GJ/Adt) compared to line 1 (2.5 GJ/Adt) (Fig. 4-3). This can be explained by the higher level of filtrate reutilization of line 2 compared to line 1 (Fig. 4-6). The total water consumption of bleaching at line 1 (24 m^3/Adt) is larger than line 2 (11 m^3/Adt) (Fig. 4-6).

Table 4-2 – Specific characteristics of water network of three mills

Water network Characteristics	Impacts	A	B1	B2	C
High temperature water at pulp line & machine (HW85°C & 92°C & 80°C)	Lower steam injection at pulp line & white water tank	√	√		
Sending back the condensate of digester heaters to condensate tank	Lower steam consumption at deaerator	√	√	√	
Reutilization of filtrate from knotters or alkaline effluent at chip bin	Lower clean water consumption & lower white liquor consumption	NA†	√	√	
Utilization of non-clean condensate of evaporation at washing	Lower clean water consumption & Lower steam consumption for hot water production & lower steam injection at the pulp line	√	√	√	√
Reutilization of all white water at process		√	√	√	
Reutilization of the reject of machine in the process		√		√	
Utilization of warm or hot water at smelt tank of recausticizing (High temp. at smelt tank ~100°C)	No need for steam heater to reheat green liquor	√	√	√	
Reutilization of alkaline effluent at recausticizing	Lower clean water consumption & Lower NaOH make-up & Lower steam consumption for hot water production	√			
Reutilization of scrubber discharge of recausticizing	Lower clean water consumption at recausticizing	√			
Utilization of non-clean condensate of evaporation at recausticizing	Lower clean water consumption & Lower steam consumption for hot water production		√	√	
Average acidic effluent in three mills; 29% of filtrate that leaves D_0 washer	Lower the acidic and alkaline effluents, lower the heat loss through effluent, lower the clean water consumption, and lower the chemicals requirement	√	√	√	√
Average alkaline effluent in three mills;18% of filtrate that leaves the Eop washer		√	√	√	√
Complete discharge of all non-clean condensate from surface condenser of digesting & evaporation	Cleaner pulp & reduced odor problem	√	√	√	√
Complete discharge of all rejects from knotters, screeners, & cleaners of washing	More uniform pulp & Less accumulation of solid particles	√	√	√	√
Complete discharge of all rejects from screeners & cleaners of pulp/ paper machine		√	√	√	√

† Not applicable: there is no chip bin at the mill A

The water network and the approach for filtrate reutilization in the bleaching stages are crucial and require particular attention due to the utilization of a large quantity of different chemicals with different natures (acid and base). In bleaching, the mixing of dissimilar streams should be avoided in order to not neutralize the preceding streams and damage the pulp with filtrate from a subsequent stage (Turner et al., 2001). However, the reutilization of subsequent filtrate (ex., E_2) at the preceding washer (ex., D_1 washer) is a common practice (Turner et al., 2001) and is also employed in the three mills (Table 4-3). This could decrease the clean water consumption, exploit efficiently the filtrate, retain the temperature of pulp at bleaching at a high level and, consequently, decrease the total steam injection in the bleaching stages and also lower the chemicals requirement at the bleaching stages. Table 4-3 presents the approach for water reutilization for washers of bleaching stages and can be used to determine the potential and possibility for filtrate reutilization in this department.

Table 4-3 – Specific characteristics of water reuse in bleaching of three mills

Characteristics	Impacts	A	B1	B2	C
D_0 filtrate to D_0 washer	Lower clean water consumption	√	√	√	√
D_1 filtrate to D_0 washer	Lower clean water consumption & Smaller steam injection at Eop steam mixer		√	√	√
D_2 filtrate to D_0 washer		√	√		NA†
Eop filtrate to D_0 washer	Lower clean water consumption & Smaller steam injection at Eop steam mixer & Less chemicals required at Eop				√
E_2 filtrate to D_0 washer		√			NA†
Eop filtrate to Eop washer	Lower clean water consumption & Smaller steam injection at D_1 steam mixer			√	√
E_2 filtrate to Eop washer			√	√	NA†
D_1 filtrate to Eop washer	Lower clean water consumption & Smaller steam injection at D_1 steam mixer & Less chemicals required at D_1		√	√	√
D_2 filtrate to Eop washer			√		NA†
D_1 filtrate to D_1 washer	Lower clean water consumption & Smaller steam injection at E_2 steam mixer			√	√
D_2 filtrate to D_1 washer			√	√	NA†
E_2 filtrate to D_1 washer	Lower clean water consumption & Smaller steam injection at E_2 steam mixer & Less chemicals required at E_2		√	√	NA†
E_2 filtrate to E_2 washer	Lower clean water consumption & Smaller steam injection at D_2 steam mixer		√	√	NA†
D_2 filtrate to E_2 washer	Lower clean water consumption & Smaller steam injection at D_2 steam mixer & Less chemicals required at D_2		√	√	NA†
D_2 filtrate to D_2 washer	Lower clean water consumption			√	NA†

† Not applicable: there are no E_2 and D_2 stages at the mill C

4.2.3 Step 3: Synthesis

Based on the results of previous steps, the potential for water and steam savings are synthesized in Table 4-4 and 4-5. At mill A, the water can be reduced at washing, the pulp machine, and recausticizing. For both lines of mill B, the water can be reduced at the pulp machine and recausticizing and for line 2, washing and steam plants have the potential for saving water. The main areas in mill C in which water can be reduced are washing and mechanical pulping. For all mills, improvement of the heat exchanger network for water and air can decrease or eliminate steam consumption to produce hot and warm water and hot and warm air for process and non-process uses. In addition, by further improvement in the heat recovery system and supplying

higher temperature water to the process line and deaerator, the steam consumption can be reduced significantly.

Table 4-4 – Summary of potential for water saving in three mills

	Mill A	Mill B – Line 1	Mill B – Line 2	Mill C
Washing	√		√	√
PM	√	√	√	√
Recausticizing	√	√	√	
Steam plant			√	

Table 4-5 – Summary of potential for steam saving in three mills

Potential	How to improve
Non-process air heating	HEX network improvement
Process air heating	
Water heating	
Steam injection points	Utilization of water at higher temperature
Deaerator	

4.3 Conclusion

A benchmarking technique has been developed to diagnose inefficiencies in steam and water systems and begin to identify the potential for energy and water efficiency improvements. It has been conducted on three Canadian Kraft mills. Two different approaches were introduced: benchmarking with current practices and a comparison of cases. The benchmarking against current practices shows the areas of inefficiency for water and steam consumptions and could also suggest improvements. The results of the comparison of the cases from the standpoint of water and steam allocation for different usages indicate inefficiencies in steam or water uses for different areas of the plants. The HEX and water networks of the cases have also been compared to determine similarities and differences and advantageous characteristics of each case in heat recovery and water reutilization systems. The advantageous characteristics of a given case can be used to propose the steam and water saving measures for another. To have more precise results, a comparison of more cases is recommended.

5 CHAPTER 5: SIMULTANEOUS ENERGY AND WATER NETWORKS ANALAYSIS

The objective of this chapter is to develop a technique to address all challenges which have been listed in section 3.4.5 of literature review. This technique simultaneously analyzes the water and energy system in both the process line and the water production network and determines the projects for water and steam savings. It gives the guidelines to extract the data. It identifies the constraints regarding the water reutilization and consumption in the process line. The fundamentals of the technique are presented in Part I of this chapter. In Part II, the technique is applied in three Canadian Kraft mills and the results are presented.

Figure 5-1 synthesizes the evolution of the main PI techniques to conceptually analyze water and energy systems, individually and simultaneously. It also shows the position of this new technique in contrast to other techniques.

5.1 Part I: Development of simultaneous energy and water networks analysis

In Part I of this chapter, first of all, the generic example is presented to show the different steps of the technique. Then, the principle of simultaneous energy and water networks analysis (SEWNA) is expressed and, finally, the structure is displayed.

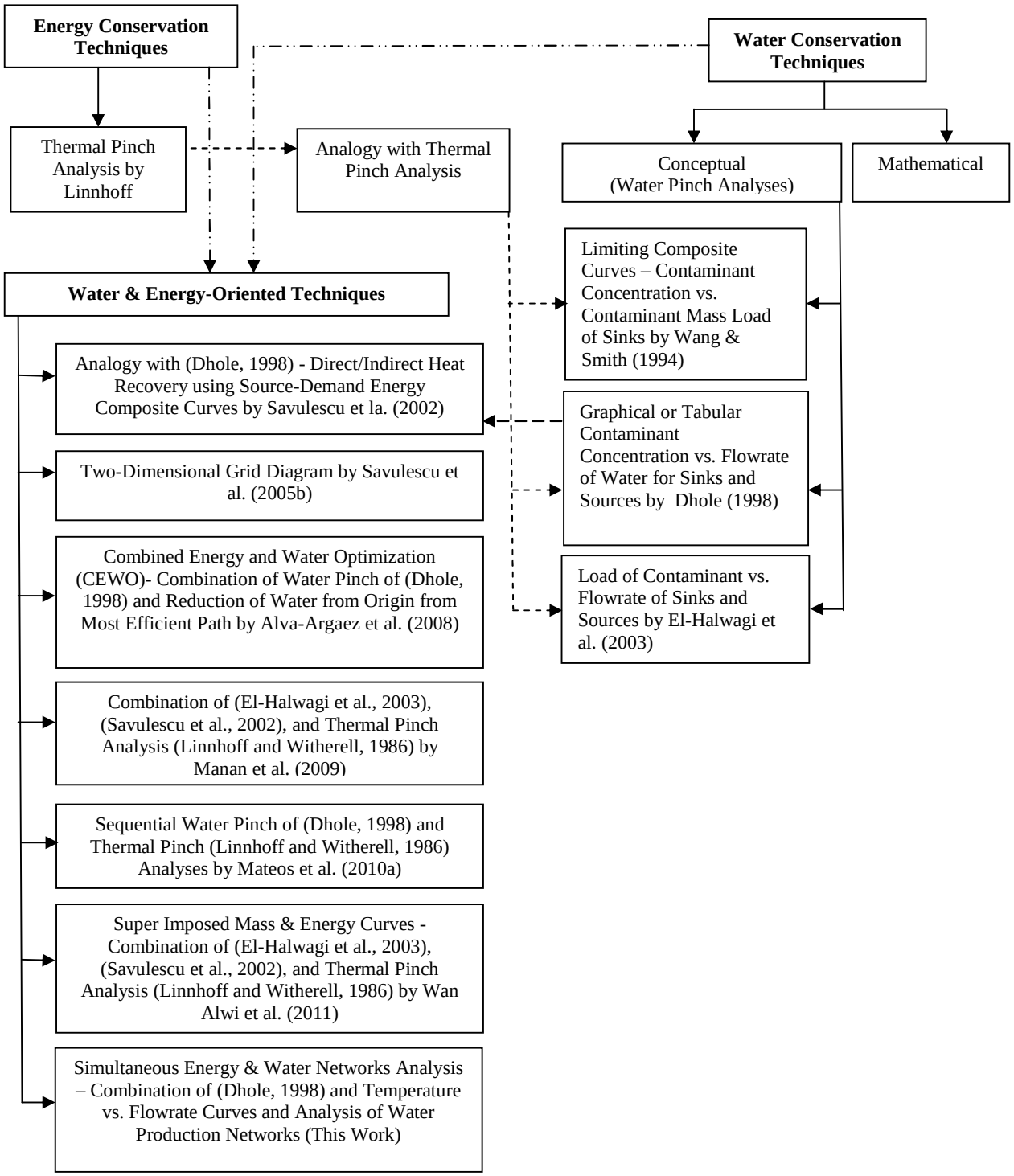

Fig. 5-1 - The evolutionary diagram process integration techniques to assess water and energy systems (——— line: derived by analogy with other techniques, —·—·—: combination of two techniques)

5.2 Case Study: Generic Example

To explain the different steps of the technique, a generic example is used and shown in Fig. 5-2. This example has been simulated in the Aspen Plus V7.1 platform. It is a process consisting of 8 unit operations; A to H. The input of the main process line (PL) is a suspension containing a significant amount of water that undergoes different operations. Chemicals X (CH-X) are used in units B and F and chemical Y (CH-Y) in unit D. These chemicals have negative effects on each other and mixing their strong solution should be prevented. There are some other assumptions that are applied for this generic example. They are explained in the following process description.

- Unit A is a separator; water is added to the suspension and then is divided into two portions; the suspension and the filtrate. The filtrate is rejected to a filtrate tank (FT-A) and partially recycled before or at the same unit and the remainder is overflow from the filtrate tank and goes to effluent (Eff-A). The temperature of the water and filtrate to this unit should not exceed 85°C.
- Unit B is a reactor where the chemical CH-X is added and some reactions are carried out. The acceptable temperature of operation is less than 80°C. The filtrate of unit E cannot be employed after this unit because it contains a significant amount of chemical Y and negatively affects the suspension after unit B, which contains a considerable quantity of chemical X.
- Unit C is another separator. The steam is utilized at this unit to retain the temperature of the suspension above 50.3^{o}C. Similar to unit A, the suspension is separated from the filtrate. The filtrate goes to the filtrate tank (FT-C) and is partially reutilized before and on unit C. A part of the filtrate from unit C must be sent to effluent to prevent the build-up of chemical X in the process line. This accounts for 29% of the filtrate that leaves unit C. However, the remainder of the filtrate, which accounts for 66% of generated filtrate from unit C is currently discharged to effluent (Eff-C). The temperature of the water and filtrate to this unit should not exceed 85°C.
- The suspension is heated up using steam to attain the temperature of 95°C at unit D. Then, it goes to unit D where it is mixed with chemical CH-Y and undergoes some reactions. The acceptable temperature of operation is less than 95°C. The filtrate of unit G

cannot be employed after this unit because it contains a significant amount of chemical X and negatively affects the suspension after unit D, which contains a substantial quantity of chemical Y.

- Unit E is a separator where the water is added and the suspension and filtrate are split. The filtrate part is drained to the filtrate tank (FT-E) and reutilized at unit C as well as before and at unit E. To prevent the accumulation of chemical Y in the process line, 18% of filtrate from unit E must be rejected to effluent. However, the remainder, which is 36% of the filtrate from unit E, is currently passed through a heat exchanger (HX-4) and then sent to effluent (Eff-E). The temperature of water and filtrate to this unit should not exceed 85°C.
- Unit F is the final reactor where the Chemical CH-X is added and some reactions are carried out. The acceptable temperature of operation is less than 80°C.
- Unit G is another separator. The water is added and the suspension and filtrate are separated from each other. The filtrate is drained to the filtrate tank (FT-G) and reutilized at units C, E, and also before and at unit G. Since the prevention for accumulation of chemical X is carried out at filtrate tank C (FT-C), it is not necessary to reject any of the produced filtrate of this unit to effluent. However, a part of the filtrate is currently overflowed and sent to effluent (Eff-G). The temperature of water and filtrate to this unit should not exceed 85°C.
- Unit H is the last separator where the suspension is mixed with another suspension from process line 2 (PL2) and water. In this unit, the bigger solid particles of the mixed suspensions must be separated as effluent (Eff-H1) to produce a uniform suspension. The remainder is separated into concentrated suspension and filtrate. The filtrate is sent to the filtrate tank (FT-H) and partially recycled to the same unit. The remainder of filtrate is overflowed from the tank and goes to effluent (Eff-H2). To maintain the temperature of the filtrate tank (FT-H), steam is employed. The temperature of water and filtrate to this unit should not exceed 85°C.

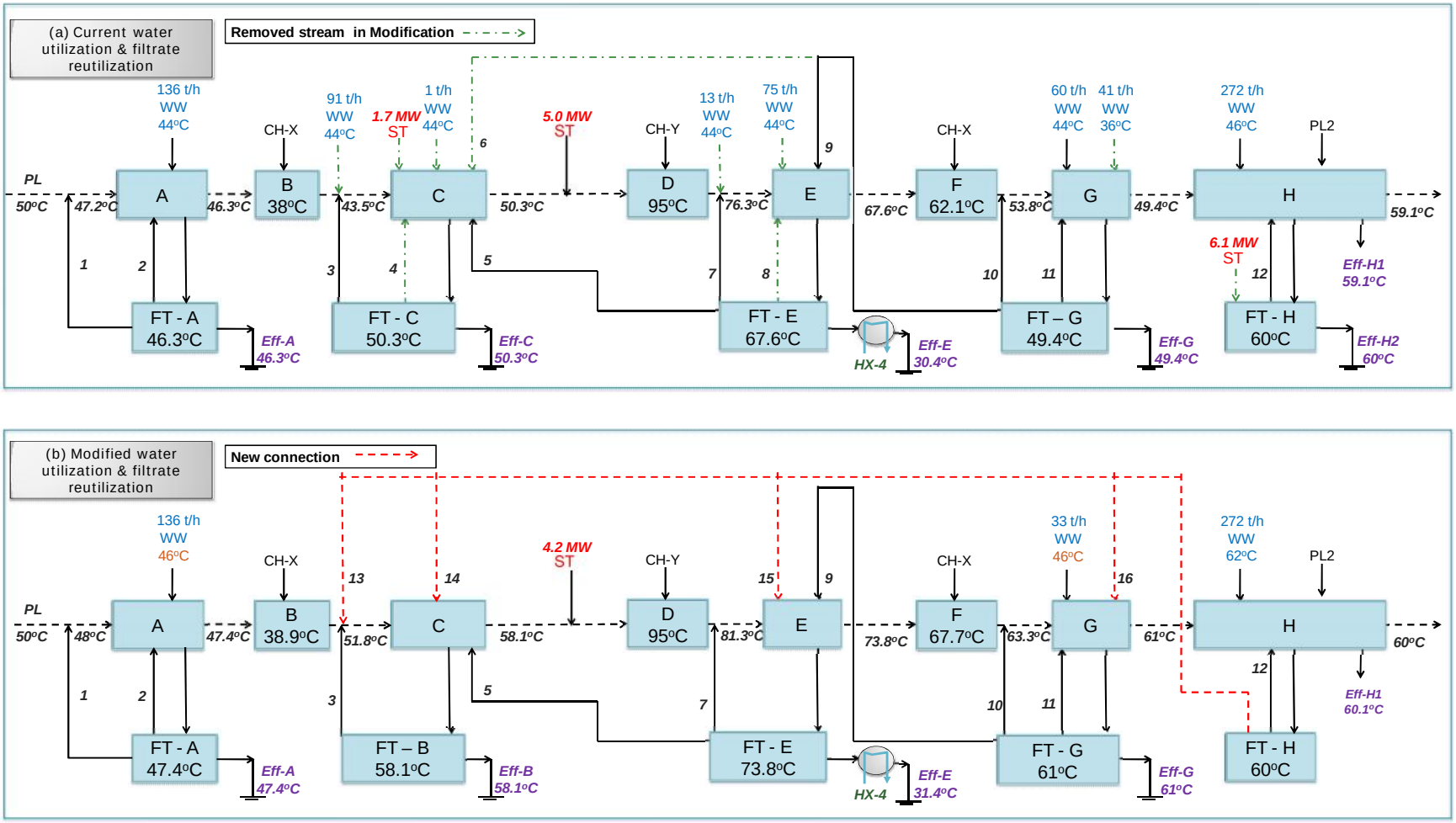

Fig. 5-2 - Generic example under (a) current conditions and (b) after final modification; dashed red lines: new connections; dotted-dashed green lines: removed connections (FT: filtrate tank, CH-X: chemicals X, CH-Y: chemicals Y, PL: process line, PL2: process line 2, ST: steam, Eff: effluent, WW: warm water)

The characteristics of this example are presented in Table 5-1. Total steam injection at the process line and filtrate tank of unit H (FT-H) is 12.8 MW. There are three temperature levels of utilized water at this generic example and the total water consumption is 689 m^3/h. The total effluent production from different unit operations is 794 m^3/h. The input to the process line (PL) is a low concentration of suspension and also the second suspension of process line 2 (PL2) contains a significant amount of water while the final product is concentrated suspension. Hence, the quantity of effluent is more than fresh water.

Table 5-1 – Main characteristics of generic example

Steam injection in process line (MW)	Water consumption (m^3/h)			Effluent production (m^3/h)
	WW 36	WW 44	WW46	
12.8	41	376	272	794
	689			

5.3 Simultaneous Energy and Water Networks Analysis (SEWNA)

This work is part of a steam and water analysis enhancement and integration (SWAEI) methodology to improve energy and water efficiencies of water-based processes and, in particular, Kraft mills. In this methodology, the interaction of applying simultaneous energy and water networks analysis (SEWNA) with the other process integration techniques, including heat exchanger design and equipment performance analysis, will be assessed. The methodology is a general method and has been applied in the Kraft process as a case study. The focus of this paper is only developing and applying SEWNA as an individual technique regardless of its interaction in the framework of the SWAEI methodology.

5.3.1 Principles

Figure 5-3 presents the main principles of the simultaneous energy and water networks analysis (SEWNA). In general, a water-based process consists of a process line as the main water user and water production network.

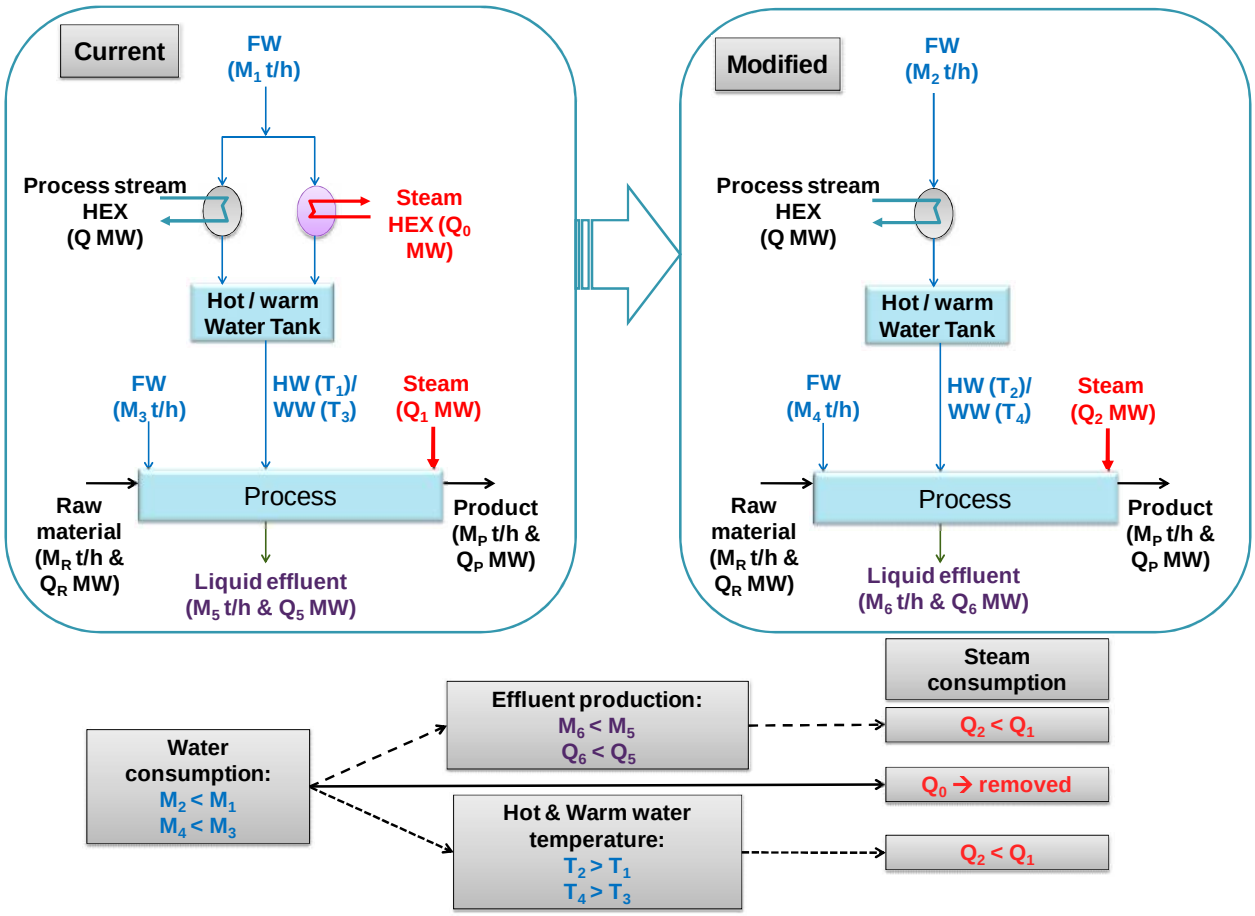

Fig. 5-3 – Simple schematic of the principle of simultaneous energy and water networks analysis (SEWNA)

A portion of generated steam from the boilers is utilized to produce hot and/or warm water using steam heaters or steam injection at the water network. A part is also used to be injected to attain and retain the temperature of the process line. Thus, it could be said that there are two types of steam consumption: steam consumption linked to water production and steam consumption linked to water consumption. The latter one shows that if water at low temperature is utilized in the process, more steam is needed to attain and retain the temperature of the process line.

In the configuration of Fig. 5-3, the heat and mass balances can be written as follows:

$$M_1 + M_3 + M_R = M_5 + M_P \qquad [1]$$

$$Q + Q_0 + Q_1 + Q_R = Q_5 + Q_P \qquad [2]$$

where the M_1 and M_3 are the mass of water inputs and M_R is the mass of raw material, while M_5 and M_P denote mass of effluent output and product, respectively. Q and Q_0 are recovered heat from process streams and the heat of steam to produce warm and hot water using HEX network, respectively. Q_1 is the heat of injected steam to the process line. Q_R denotes the heat content of the raw material. Q_5 and Q_P represent the heat content of the effluent and product, respectively.

The objectives of SEWNA are to simultaneously

- Decrease water consumption; M1 → M2 and M3 → M4
- Reduce the steam consumption linked to both water consumption (Q1→ Q2) and water production (Q0 → removed) (Fig. 5-3).

In the case of steam consumption linked to water production, the goal is to eliminate the steam heater and steam injection for hot and warm water production (Q0→ removed).

For the steam consumption linked to water consumption, the story differs from the case of water production.

- By reducing the total water consumption (M1 → M2 and M3 → M4), correspondingly, the total effluent production declines (M5 → M6).
- The total rejected heat by effluent is also reduced significantly (Q5 → Q6) and the demand for steam injection to the process line is diminished (Q1 → Q2).
- By reducing the water consumption (M1 → M2), the existing HEXs of the water production network should be revamped due to less water demand for the process.
    - Since M1 (→ M2) is reduced, there is a potential to reach the first objective, which was the removal of steam heaters and steam injections for hot and/or warm water production.
    - Secondly, using the water network and exploiting the same available heat (Q) in the process stream HEXs, hot and warm water at higher temperature can be produced (T1 → T2).
- Utilization of warmer and hotter temperature water will also shift the heat load from steam to water and results in a reduction of steam injection at the process line (Q1 → Q2).

5.3.2 Structure

The structure of simultaneous energy and water networks analysis (SEWNA) is illustrated in Fig. 5-4. The technique consists of five successive steps; data extraction, constraint analysis, water and energy analysis, hot and warm water network analysis and, finally, economic analysis. Each step is elaborated in the following sections.

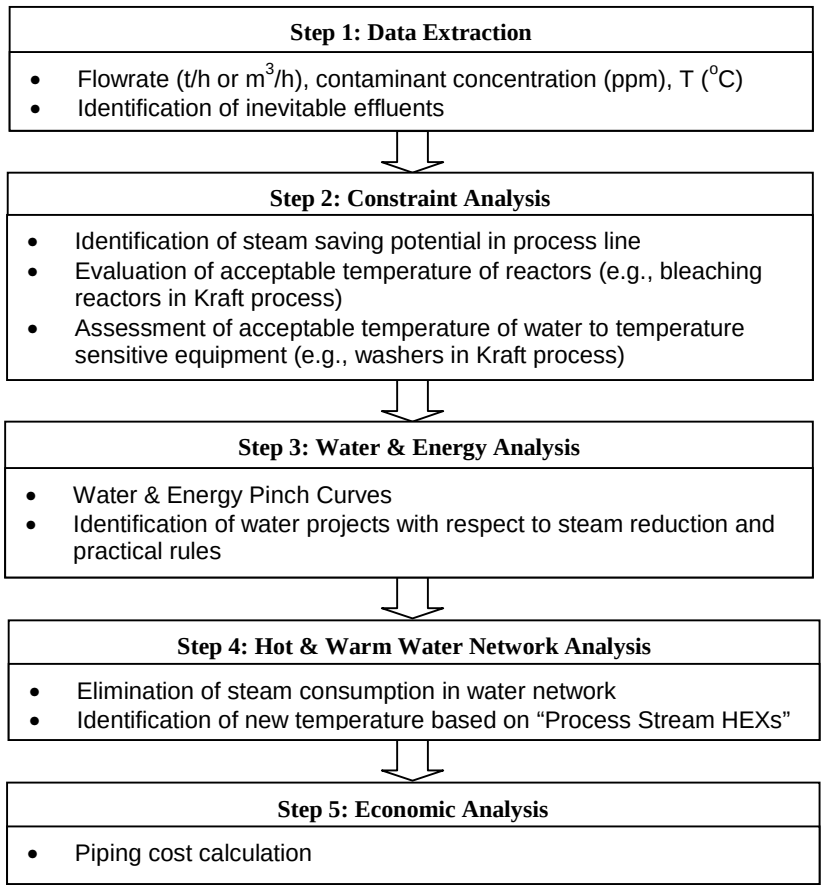

Fig. 5-4 - Simultaneous energy and water networks analysis (SEWNA)

5.3.2.1 Step 1: Data extraction

Data extraction is a crucial step in this analysis, because the final results highly depend on the quality of the employed data. To extract the data, the first task is to determine the control volume (Fig. 5-5). Control volume is started in the process line (PL) from the outlet of a unit operation that generates the filtrate (e.g., separator unit A) until the outlet of the next unit operation(s) that again generates the filtrate (e.g., separator unit C). It means that the control volume should include the unit(s) with at least one filtrate stream. For example, unit B by itself cannot be the

only unit in the control volume due to a lack of filtrate production while units B and C should be included in one control volume because unit C generates filtrate. All water and filtrate from the filtrate tank of the same and succeeding units to control volume is the sink (demand) and the filtrate that drains off the control volume to the filtrate tank is the source. The total flowrate (M_T), contaminant concentration (C_T) and temperature (T_T) of sink and source are calculated as the following:

$$M_T = \sum_{i=1}^{n} M_i \qquad [3]$$

$$C_T = \frac{\sum_{i=1}^{n} C_i M_i}{\sum_{i=1}^{n} M_i} \qquad [4]$$

$$T_T = \frac{\sum_{i=1}^{n} T_i M_i}{\sum_{i=1}^{n} M_i} \qquad [5]$$

where C_i, M_i, T_i, and n represent the contaminant concentration of stream i (ppm), the flowrate of stream i (t/h or m^3/h), the temperature of stream i (^oC), and the total number of streams, respectively.

The contaminant concentration of sink is regarded as a maximum acceptable contaminant concentration that is an important parameter to identify the water projects.

Figure 5-5 displays the data extraction for units BC and DE. The starting point of the control volume BC is the outlet of the process line from unit A and ends at the outlet of unit C. The sink BC comprises two warm water (WW) streams at 44^oC and four filtrate streams from filtrate tanks of unit C (FT-C), unit E (FT-E), and unit G (FT-G). The only BC source is the filtrate that leaves the unit C.

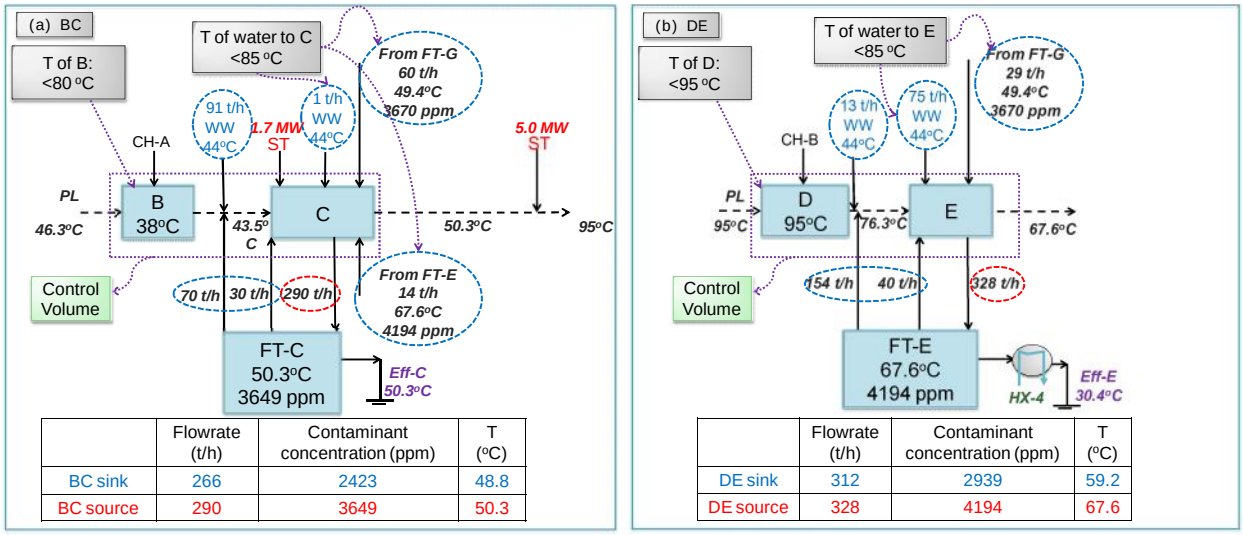

	Flowrate (t/h)	Contaminant concentration (ppm)	T (°C)
BC sink	266	2423	48.8
BC source	290	3649	50.3

	Flowrate (t/h)	Contaminant concentration (ppm)	T (°C)
DE sink	312	2939	59.2
DE source	328	4194	67.6

Fig. 5-5 – Procedure for data extraction of units BC and DE of the generic example (Fig. 5-2) and constraint analysis for water reutilization (WW: warm water, Eff: effluent, FT: filtrate tank)

Data for the sink and source of each unit are extracted and presented in ascending order of contaminant concentration in Table 5-2 and 5-3.

Table 5-2 – Extracted data for all sinks in ascending order of contaminant concentration

Sink	Flowrate (t/h)	Contaminant con. (ppm)	T (°C)
DE	312	2939	59.2
BC	266	2423	48.8
FG	286	2378	46.4
H	4729	323	59.2
A	428	17	45.6

Table 5-3 – Extracted data in ascending order of contaminant concentration for (a) overall sources, (b) inevitable effluents, and (c) final sources after excluding the inevitable effluents

a (overall sources)				b (inevitable effluents)		c (Final sources)			
Overall Source	**Flowrate (t/h)**	**Contaminant con. (ppm)**	**T (°C)**	**Inevitable effluent**	**Flowrate (t/h)**	**Final Source**	**Flowrate (t/h)**	**Contaminant con. (ppm)**	**T (°C)**
DE	328	4194	67.6	**DE**	59	**DE**	269	4194	67.6
FG	299	3670	49.4			**FG**	299	3670	49.4
BC	290	3649	50.3	**BC**	84	**BC**	206	3649	50.3
H	4743	343	59.1			**H**	4743	343	59.1
A	429	25	46.3			**A**	429	25	46.3
				Eff-H1	24				

The inevitable effluent streams should also be identified and subtracted from the source pool so as to prevent chemical and big solid particle accumulation and scaling in the process line. According to the process description, the inevitable effluent streams are 29% of filtrate from unit C (containing a high concentration of chemical X), 18% of filtrate from unit E (containing a high

concentration of chemical Y) and all suspension reject containing big solid particles from unit H (Eff-H1). The values of inevitable effluents are presented in Table 5-3b. Table 5-3c is the final source for water and energy analysis and is the subtraction of Table 5-3b (inevitable effluents) from Table 5-3a (overall sources).

5.3.2.2 Step 2: Constraint analysis

Analysis of the constraints is a prerequisite task to define the projects for efficient water reuse. Each process has its own restrictions for water reutilization that should be identified in the early stages of the design. The first task in constraint analysis is to determine the potential for steam savings in the process line. In the Fig. 5-5, the principal difference between the control volume BC and DE is that *in* and *after* BC, the steam is injected in the process line while *in* and *after* DE, there is no steam demand. If the water and recycled filtrate to sink BC are supplied at a higher temperature than it is currently (48.8^{o}C), the steam demand at unit C and after unit C will decrease significantly. In the case of the generic example, there are three points where steam is injected into the process line and by improving water reutilization and also providing clean water at a higher temperature to the process line, there is potential for steam reduction or elimination at these points. They are positioned at unit C, before unit D, and the filtrate tank of unit H (FT-H).

It is important to notice that when the projects for filtrate reutilization and water utilization are identified the temperature of the process line to the reactor should not go beyond the acceptable temperature of the units (herein reactor units B, D, and F). The temperature of water and filtrate to temperature sensitive equipments (herein separator units A, C, E, G, and H) also should not be more than the acceptable temperature of water/filtrate to this type of unit. For example, in Fig. 5-5, the acceptable temperature of unit B is less than 80°C and the acceptable temperature of water/filtrate to unit C is less than 85°C. The acceptable temperature of reactor units B, D, and F are respectively 80, 95, and 80°C while the maximum allowable temperature of water and filtrate to separator units (A, C, E, G, and H) is 85°C as mentioned in the process description.

5.3.2.3 Step 3: Water and energy analysis

5.3.2.3.1 Rules for water reutilization

One principle rule and two heuristic rules are established to determine the water reuse projects:

Rule 1 - Countercurrent flow rule: do not reuse the filtrate of the preceding unit in the following units. Nevertheless, the filtrate of the preceding unit is clean enough for reutilization (Fig. 5-6a).

Rule 2 - Existing connections and flowrates consideration: retain the existing connections with the highest flowrate (Fig. 5-6b). For example, in Fig. 5-5, the largest flowrate of filtrate to control volume BC is 100t/h from the filtrate tank of unit C (FT-C) and similarly for DE it is 195 t/h of filtrate from the filtrate tank of unit E (FT-E). In the project proposition, these connections should be kept in order to avoid substantial changes.

Rule 3 - Higher temperature before steam injection (Fig. 5-6c):

- **a.** Reuse the higher temperature filtrate before steam injection points. Do not just follow the clean to clean rule of El-Halwagi et al. (2003).
- **b.** Utilize the higher temperature water before steam injection points.

The other heuristic rules also can be defined based on the nature of the process. For example, another heuristic rule for the generic example (Fig. 5-2) can be defined as follows:

Rule 4 - Avoid dissimilar mixing: in the generic example it is assumed that chemical X has a negative impact on chemical Y and vice versa. Therefore, do not reutilize the filtrate from unit E in the process line after reactor unit B because this filtrate from unit E contains a significant amount of chemical Y, which negatively affects the suspension at the outlet of unit B, which contains a large amount of chemical X. However, the filtrate from unit E can be used at separator unit C because the suspension after unit C is directed to unit D, which requires chemical Y. A similar argument can be used for the reutilization of filtrate from unit G after unit D and at unit E (Fig. 5-6d).

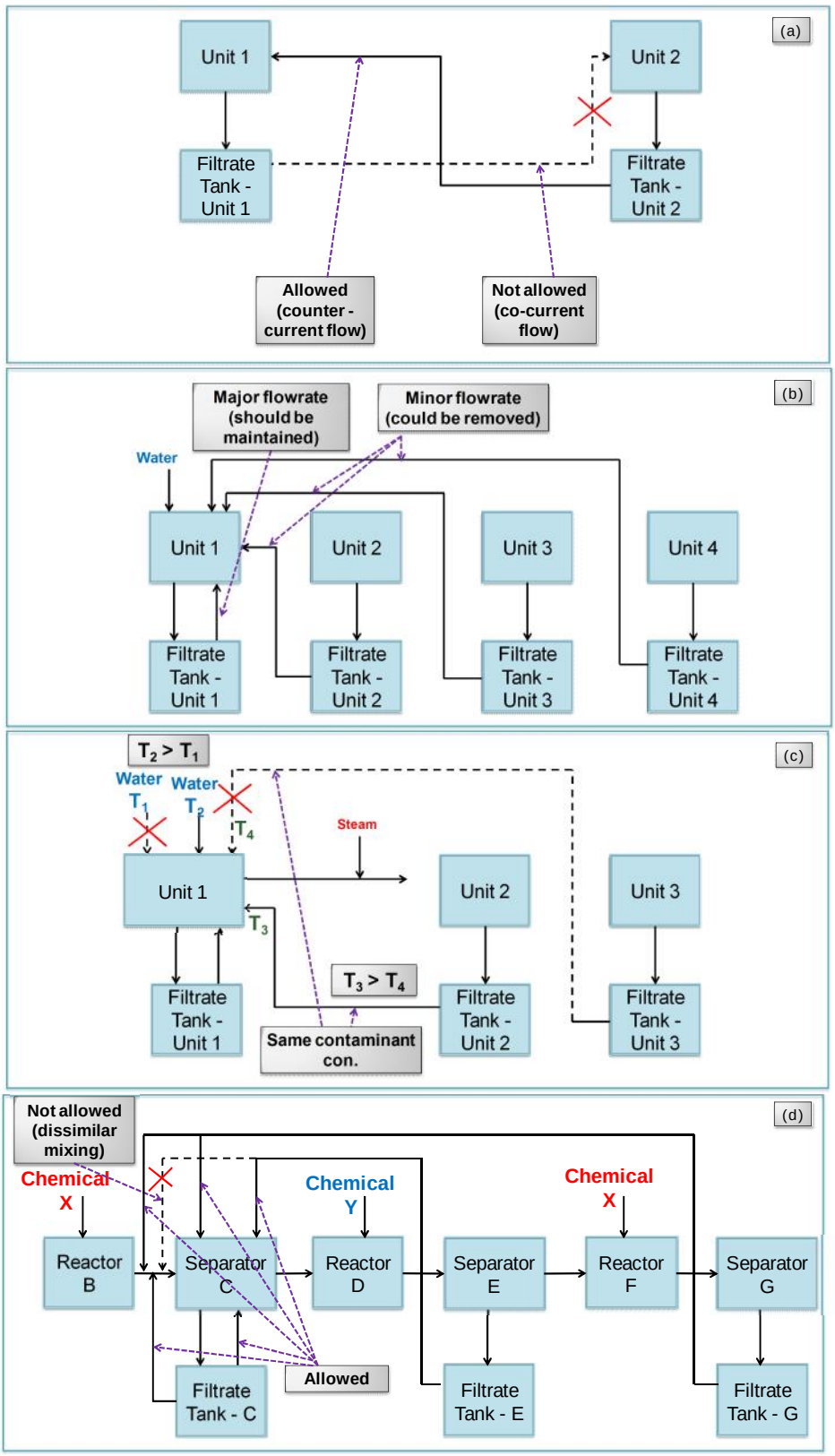

Fig. 5-6 – Simple schematic of rules to identify projects; (a) Rule 1, (b) Rule 2, (c) Rule 3, (d) Rule 4

5.3.2.3.2 Water & Energy Pinch

The core of the technique is the identification of water projects with respect to steam reduction. For this purpose, the Water & Energy Pinch is developed that can be performed in the tabular form of sinks and sources or with curves. This technique combines the Water Pinch Analysis of Dhole (1998) and temperature tables or curves for both sinks and sources. The temperature of sources represents the available energy and the temperature of sinks show the minimum energy demand for the sinks.

The Water & Energy Pinch Curves consist of contaminant concentration versus flowrate and temperature versus flowrate for all sinks and sources. The sinks and sources are arranged in ascending contaminant concentration order. However, in a tabulated approach, it is possible to arrange them based on the sequence of units. Figure 5-7 demonstrates the Water & Energy Pinch curves for the generic example. Table 5-4 also presents the tabulated approach based on the sequence of units. The Pinch point is located at 5517 t/h of the flowrate and the source contaminant concentrations of 343 and 25 ppm and sink contaminant concentrations of 2378 and 323 ppm.

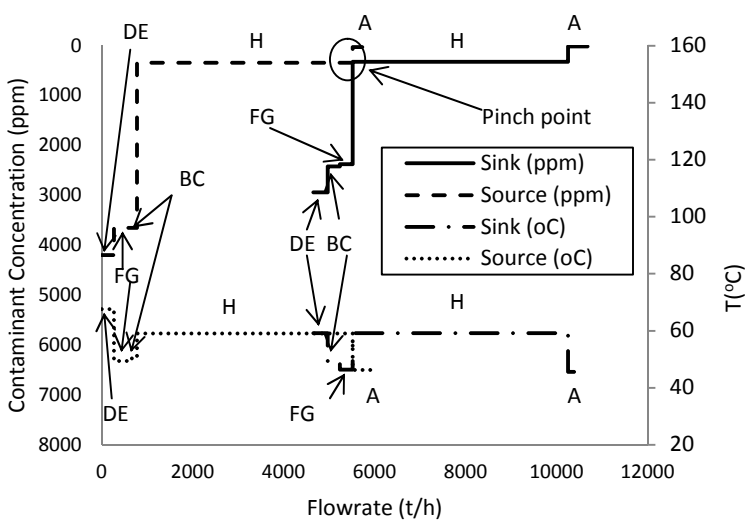

Fig. 5-7 – Water & Energy Pinch Curves before identification of water projects for generic example (Fig. 5-2)

Table 5-4 – Tabulated Water & Energy Pinch before identification of water projects for generic example (Fig. 5-2)

	Sink			Source		
	F (t/h)	C (ppm)	T (°C)	F (t/h)	C (ppm)	T (°C)
A	428	17	45.6	429	25	46.3
BC	266	2423	48.8	206	3649	50.3
DE	312	2939	59.2	269	4194	67.6
FG	286	2378	46.4	299	3670	49.4
H	4729	323	59.2	4743	343	59.1
WW36				41		36
WW44				377		44
WW46				272		46

5.3.2.3.3 Water & energy projects identification

Water first should be supplied to those sinks with the lowest acceptable contaminant concentration (A and H) and then others (BC, DE, and FG). If the acceptable contaminant concentration of some units is close, as in the case of BC, DE, and FG, the one in which steam is used *in* or *after* should be evaluated first. It means that the order to supply water is A, H, BC, DE, and FG. The sources and clean water at the current temperature levels should be mixed to obtain the contaminant concentration and temperature for the sink according to the following conditions:

Contaminant concentration to sink ≤ acceptable contaminant concentration of the sink [6]

Temperature to sink ≥ Current temperature of the sink
(Especially when there is steam injection in or after the sink) [7]

Sink A can receive the water from all sources according to rule 1. Nevertheless, Fig. 5-7 indicates that if the other sources rather than source A want to be reutilized, the clean water consumption should substantially increased. Therefore, similar to current configuration, warm water at 44°C (WW44) is used to dilute source A (rule 2) and make it suitable for sink A. Hence there is no change in the current configuration (Fig. 5-8 & Table 5-5).

According to the traditional rule of “clean to clean” (Dhole, 1998; El-Halwagi et al., 2003), sink H can receive the water from source A (Fig. 5-7). Nevertheless, according to rule 1 and 2 of this work, this sink can only receive water from the source H and warm water. Since the current existing warm water to this unit is WW46, this water is utilized to dilute the source H for sink H (Fig. 5-8 & Table 5-5). This selection does not alter the current configuration of water supply at

sink H, however the temperature is slightly lower than it is right now and steam is still required for the filtrate tank of unit H (FT-H). This issue will also be resolved in analysis of the hot and warm water production network, which is explained in the next section. In addition, all available WW46 is employed at this point (Table 5-4) and, hence, the WW44 and WW36 could be used in other units. The remainder of source H is 286 t/h that can be reutilized at BC to FG.

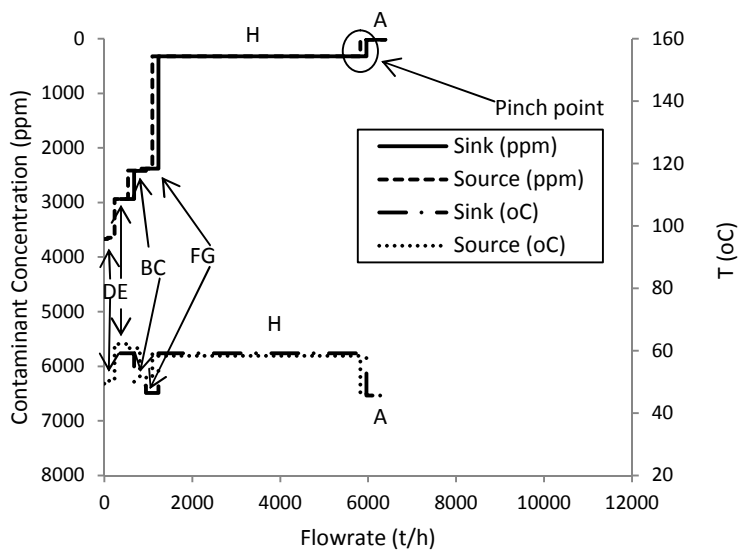

Fig. 5-8 - Water & Energy Pinch Curves after identification of water projects for generic example (Fig. 5-2)

Table 5-5 - Tabulated Water & Energy Pinch after identification of water projects for generic example (Fig. 5-2)

From source						To sink				
	F (t/h)		F (t/h)		F (t/h)		F (t/h)	C (ppm)	Modified T (°C)	Current T (°C)
A	292	WW44	136			A	428	17	45.6	45.6
BC	48	U3	102	U5	116	BC	266	2416	60.8	48.8
DE	167	U4	50	U5	95	DE	312	2937	62.1	59.2
FG	178	U5	75	WW44	33	FG	286	2378	51.3	46.4
H	4457	WW46	272			H	4729	323	58.3	59.2
						To effluent				
A	137					Eff-A	137	25	46.3	
BC	158					Eff-BC	158	3649	50.3	
FG	71					Eff-DE	71	3670	49.4	

After and *in* BC, steam is injected to raise the temperature of the process line. According to rule 1, the sources BC to H are suitable to supply water for sink BC. The source DE has the highest temperature among the others, so it could reduce the steam injection after BC (rule 3), this source could be reused more efficiently than it is right now. However, the source DE contains more

contaminant than source BC (Fig. 5-7) and mixing the source BC with source DE violates the traditional rule of cleanest to cleanest (Dhole, 1998; El-Halwagi et al., 2003). This shows one of the main features of the technique that clearly reveals the importance of countercurrent flows as well as raising the temperature for sinks, and not only the importance of contaminant concentration. Furthermore, the source DE cannot be reused after unit B (rule 4), but can only be used at unit C. Sink DE itself requires 167 t/h of source DE after unit D, so the remainder filtrate from source DE (102 t/h) could be used at unit C, which needs 105 t/h of water. The rest of the water for sink BC could be supplied by mixing either source BC or FG with source H. Source BC is preferred over source FG because of the existing connection (rule 2) and its higher temperature (rule 3). The result is presented in Table 5-5 and Fig. 5-8. The temperature for sink BC significantly rises from 48.8 to 60.8^{o}C and results in lower steam consumption at and after unit C.

Sink DE, respecting rule 1, can receive the water from sinks DE, FG, and H. In the current configuration, source DE provides more than 60% of the water demand for sink DE. Therefore, according to rule 2, this connection should be retained. In the current configuration, sink DE consumes 167 t/h of water after unit D and 145 t/h at unit E. Thus, according to rule 4, the source FG can only be utilized at unit E, not after unit D. As mentioned earlier, 167 t/h of source DE is reutilized after unit D and the remainder is provided from source FG and H (Fig. 5-8 & Table 5-5). This also raises the temperature of the water for sink DE from 59.2 to 62.1^{o}C. However, it does not affect the steam consumption directly, but it would raise the temperature of the process line and result in steam savings at the filtrate tank of unit H (FT-H).

After and *in* FG there is no steam injection and the only available sources for sink FG are sources FG and H, according to rule 1. In the current configuration sink FG receives around 55% of its demand from source FG, so in the modification this also should be taken into account (rule 2). The remainder of source H after reutilization in BC, DE and H is 75 t/h. This water and WW44 could be used to dilute the source FG and make it appropriate for sink FG. The final proposition for this unit is shown in Table 5-5 and Fig. 5-8. This raises the temperature for sink FG from 46.4 to 51.3^{o}C. Similar to sink DE, this would not directly affect the steam consumption but it would save steam at the filtrate tank of unit H (FT-H) by raising the temperature of the process line.

The Pinch point is changed to the flowrate of 5959, sink contaminant concentrations of 324 and 17 ppm, and source contaminant concentrations of 25 and 17 ppm. By applying this step, from the current water sources, 272 t/h of WW46 is used at sink H and 169 t/h of WW44 is utilized at sinks A and FG. The remainder that involves 208 t/h of WW44 and all WW36 (41 t/h) is saved.

5.3.2.4 Step 4: Hot and warm water network analysis

The current hot and warm water network is illustrated in Fig. 5-9a. To produce and store three levels of warm water (WW36, 44, and 46°C), three warm water tanks (WWT1-3), five process stream heat exchangers (HX1-2, 4-6), and one steam heater (HX3) have been employed. The current heat exchanged in the process stream HEXs is 28.91 MW.

- A surface condenser (HX1) is used to condense a non-clean flashed steam and recovers 4.06 MW heat.
- A water economizer (HX2) is employed to absorb 7.04 MW heat from a stack gas and generate 50°C warm water.
- A steam heater (HX3) is employed to produce 202 t/h of warm water at 13°C using 2.31 MW of live steam.
- This water is consequently passed through E-exchanger (HX4) to recover 4.98 MW of heat from liquid effluent (Fig. 5-2a) from the filtrate tank of unit E (FT-E) and generate warm water at 36°C.
- Surface condenser (HX5) condensates a clean flashed steam and recovers 2.55 MW of heat.
- Another water economizer (HX6) recovers 10.28 MW of heat from an air exhaust and produces water at 46°C.

After applying step 3 and identifying the water projects and water savings, it is necessary to reduce the saved water from the resources. The existing hot and warm water network should be redesigned so as to reduce the saved water (249 t/h), eliminate steam as one of the goal of this analysis, and finally identify the new water temperature based on the existing process stream heat exchangers and their heat load. Figure 5-9b illustrates the water network after the modification. The steam heater (HX3) is completely removed and results in 2.3 MW of steam

savings. In addition, surface condenser (HX5) is also removed and its clean flashed steam is injected into warm water tank #3 (WWT3) to raise the temperature to 62°C. The temperature level of water to A and FG rises from 44 to 46°C while for H, it rises from 46 to 62°C (Fig. 5-9b). The total heat that is exchanged by the four process stream heat exchangers (HX1, 2, 4, 6) is 23.53 MW. This value is even smaller than the current heat exchanged (26.36 MW) of these four heat exchangers while producing warmer and hotter water. Since the total water that passes through these heat exchangers decreases, water at higher temperature can be produced. To maintain the same area of heat exchangers as existing ones, the total heat exchanged should be reduced and the temperature of each heat exchanger should also be adjusted.

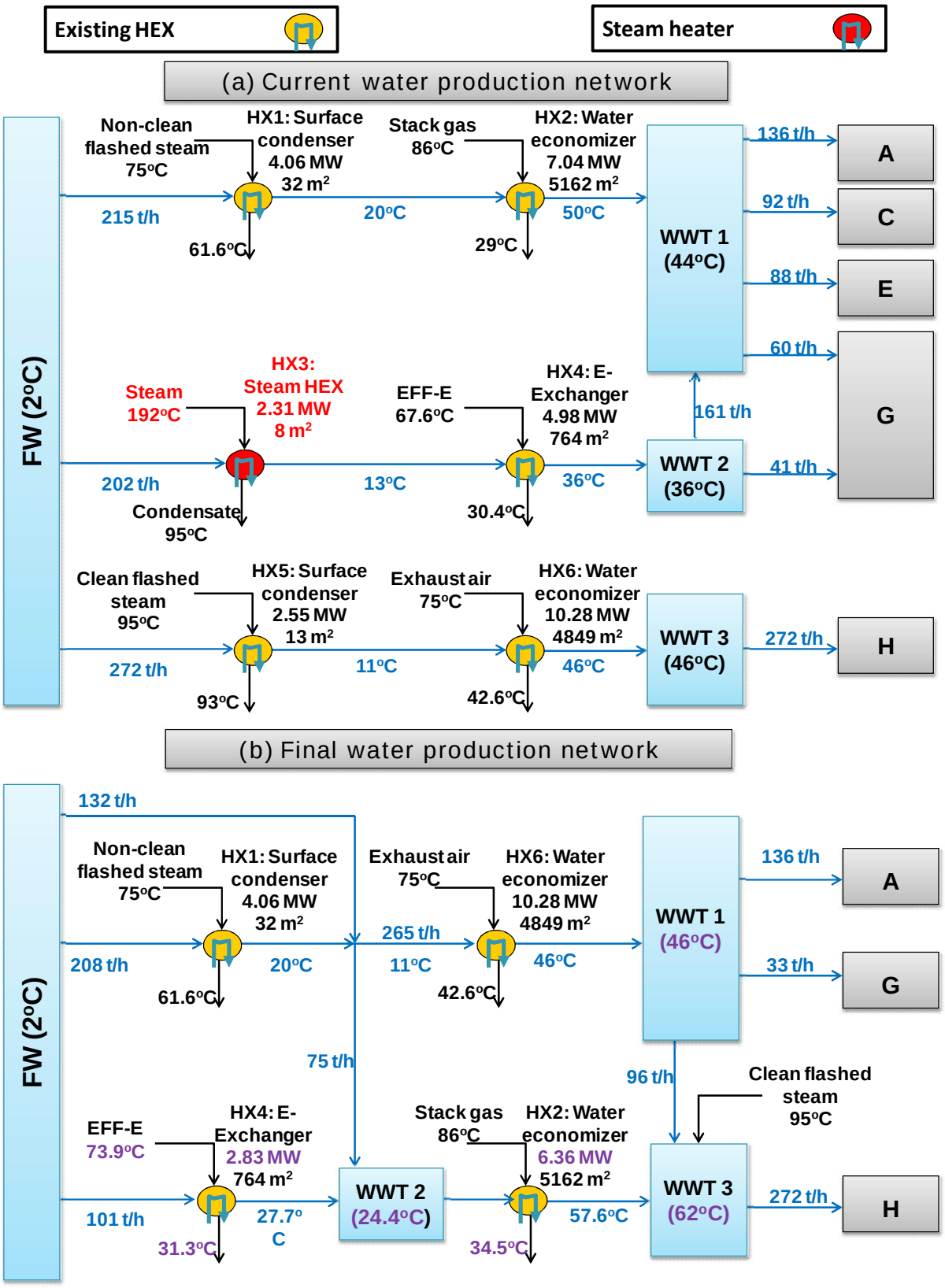

Fig. 5-9 – (a) Existing and (b) final hot and warm water network for generic example

5.3.2.4.1 Final configuration of the process line

Applying all the modifications of step 3 and incorporating the new water temperatures of step 4 are displayed in Fig. 5-2b as the final configuration. The changes in flowrate of each existing connection and new connection are presented in Table 5-6. In total there are three eliminated connections while four new connections should be made and the effluent from the filtrate tank of unit H (Eff-H1) is completely recycled in the process. The flowrate of most of the reutilized filtrates to different units are also changed. These results show that the existing filtrate reutilization should not be assumed to be efficient, but can be improved upon.

Table 5-6 – (a) The final changes in flowrate of existing connections and (b) new connections

Connection #	From	To	Flowrate (m^3/h)	
			Current	Final
(a) Existing Connection				
1	FT-A	Before A	50	50
2	FT-A	A	242	242
3	FT-BC	After B	70	48
4	FT-BC	C	30	Removed
5	FT-DE	C	14	102
6	FT-FG	C	60	Removed
7	FT-DE	After D	154	167
8	FT-DE	E	40	Removed
9	FT-FG	E	29	50
10	FT-FG	After F	156	156
11	FT-FG	G	30	22
12	FT-H	H	1238	1238
(b) New Connection				
13	FT-H	Before C	-	113
14	FT-H	C	-	3
15	FT-H	E	-	95
16	FT-H	G	-	75

Applying the new water temperature raises the temperature to sinks. The temperature of the total water to each sink under the current conditions, after applying step 3 (with the current water temperature of 36, 44, and 46°C) and step 4 and determining the new water temperature (46 and 62°C), are displayed in Fig. 5-10. Results show that the temperature of water to sinks BC, DE, and FG rose after step 3 while it dropped down for sink H and steam was still required to

maintain the temperature of the filtrate tank of unit H (FT-H). After applying step 4, by providing the water at a higher temperature (62°C), the temperature of water going to sink H returns to the desired temperature, so the steam in FT-H is not required anymore. In other words, the heat load to FT-H is shifted from steam to water. This shows an important aspect of this technique and the importance of performing step 4, because applying this step results in steam savings at both the hot and warm water networks and the process line while applying only step 3 results in partial steam savings on the process line.

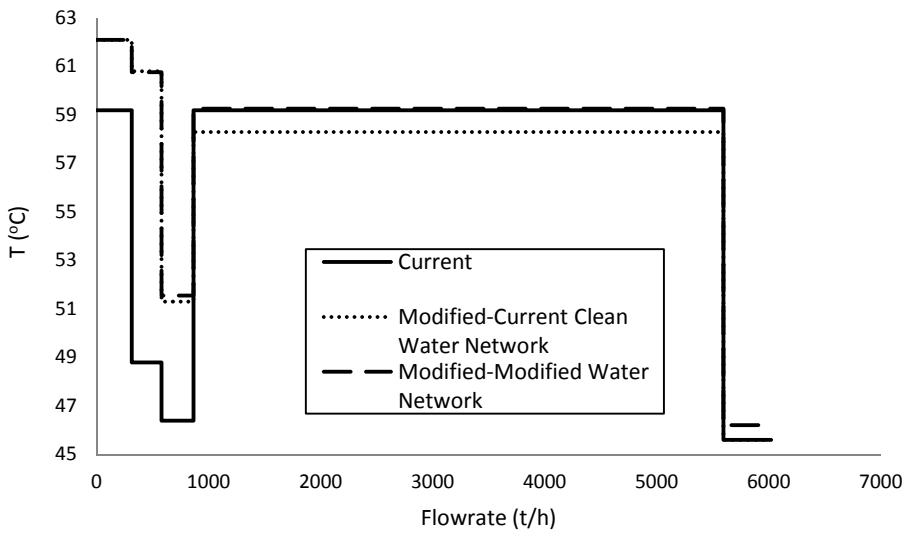

Fig. 5-10 – Temperature of total water and filtrate to sinks under current conditions after applying step 3 and 4

5.3.2.4.2 Summary of savings

The total steam and water savings as well as effluent reduction are summarized in Table 5-7. The water is significantly saved at BC, DE, and FG and correspondingly the effluents are substantially reduced from DE, FG, and H. However, the effluent of BC has been increased. The total water savings and effluent reduction are 36 and 33%, respectively. The steam injection in the process line is eliminated at unit A and the filtrate tank of unit H (FT-H) and also reduced before unit D. The only steam heater to produce warm water (HX3) is removed. The steam savings over the current consumption of these four steam users is 73%.

Table 5-7 – Total water and steam savings and effluent reduction for generic example (Fig. 5-2)

	Water Consumption (m^3/h)		Effluent production (m^3/h)		Steam consumption (MW)		
	Current	**Final**	**Current**	**Final**		**Current**	**Final**
A	136	136	137	137	**Process Line**		
BC	92	-	190	242	**A**	1.7	-
DE	88	-	119	59	**Before D**	5.0	4.2
FG	101	33	25	71	**FT-H**	6.1	-
H	272	272	322	24	**Water network**		
Total	689	441	793	533	**HX 3**	2.3	-
					Total	15.7	4.2

5.3.2.5 Step 5: Economic Analysis

The main cost of this technique is piping. The cost of each new pipe (CP) for 2012 is calculated as follows (Kim and Smith, 2004):

$$CP = (7346.7\,A + 258)L \qquad [5]$$

where L is the length of the pipe and is assumed to be 150 m for all connections. However, the correct length can be measured based on the map of the process. The cost includes the supply and erection of the pipe, flanges, fitting and welding requirements. The cross sectional area of pipe (A) for new connections is calculated as follows (Kim and Smith, 2004):

$$A = \frac{\dot{V}}{\upsilon \times 3600} \qquad [6]$$

where $\dot{V}$ and υ denote volumetric flowrate (m^3/h) and velocity of fluid in the pipe, respectively. The velocity is assumed to be 1 m/s (Kim and Smith, 2004).

Labor for installation and material and labor for pipe insulation are estimated at 40% and 20% of the total installed cost of piping, respectively (Peters et al., 2002). Table 5-8 presents the total capital cost requirement for the three proposed new connections of the generic example. These projects entail 0.51 M$ in capital costs for piping.

Table 5-8 – Capital cost for the piping of three new connections of generic example (Fig. 5-2b)

Pr. #	Project Name	Stream From	Stream To	Flowrate (t/h)	Cost (M$)
1	BC	FT-H	Before and at C	116	0.19
2	DE	FT-H	E	95	0.17
3	FG	FT-H	G	75	0.15
			Total		**0.51**

5.4 Conclusion of Part I

Simultaneous energy and water networks analysis (SEWNA) has been developed for water-based processes. The technique aims at reducing water and steam consumption at the same time. It involves the water utilization and filtrate reutilization systems, water production and related steam networks. It does not assume that all existing connections for water reutilization at the process are correct, but some of them require reconsideration and improvement.

This technique has several important features;

- It provides a systematic approach to extract the data for water and energy analysis. It shows how the control volume should be defined and what data is required for the sinks and sources. It also displays that some of the sources based on the nature and characteristic of the process should be subtracted from the pool of sources. These inevitable effluents generally cause the accumulation of some chemicals or particles in the process, if they are not sent to the sewer. This ensures that the level of contaminants in the process line would be in the safe region.
- The technique also helps to identify the areas where steam can be saved.
- The constraints for filtrate reutilization and water utilization in the process should be determined as a prerequisite step for analysis, for instance, the acceptable temperature of the reactors and the allowable temperature of the water/filtrate for temperature sensitive units.
- New rules have been proposed to redesign existing water reutilization and correct inefficient connections. These rules do not only concern contaminant concentration of sinks and sources, but also their temperature. The clean to clean criterion is not the main factor for filtrate reutilization, but respecting countercurrent flow is the most important factor. Respecting the current connections is also considered in the rules to avoid major changes. The higher temperature filtrate and water should be supplied before steam injection in the process line. Other rules considering the constraints of process can be added to these three main rules.
- A new Water & Energy Pinch Analysis has been developed by coupling the contaminant concentration versus flowrate curves with temperature versus flowrate curves of sinks

and sources. This analysis can also be performed in tabular form. The temperature of sinks and sources represents the minimum demand and available heat, respectively. These curves or table help to identify the water reutilization projects respecting the energy aspects.

- The technique also involves an important step where the analysis of the existing hot and warm water production network is carried out in order to reduce the saved water from the origin. This analysis aims to eliminate steam heaters and steam injection for hot and warm water production. It also exploits the existing heat exchanger network and its available heat to produce hotter and warmer water, because the higher the temperature of water to the process, the lower the steam injection in the process line. This is a shift in the energy load from steam to water using the current infrastructure.

The SEWNA could significantly reduce steam at both the process line and water production network and also reduce water consumption in a water-based process.

5.5 Part II: Application of simultaneous energy and water networks analysis (SEWNA) for Kraft processes

In Part I of this chapter, the simultaneous energy and water networks analysis (SEWNA) has been presented. The objective of Part II is to apply the presented technique of Part I in Kraft mills as an industrial application in order to assess how effective the SEWNA is. The detailed results of mill C are shown. The overall results of applying the technique to two other Canadian mills (A and B) are presented and the results of the three mills are compared.

5.6 Results

5.6.1 Step 1: Data extraction

The process layouts of the pulp line and the main water users of the recovery loop are demonstrated in Fig. 5-11a to 5-13a.

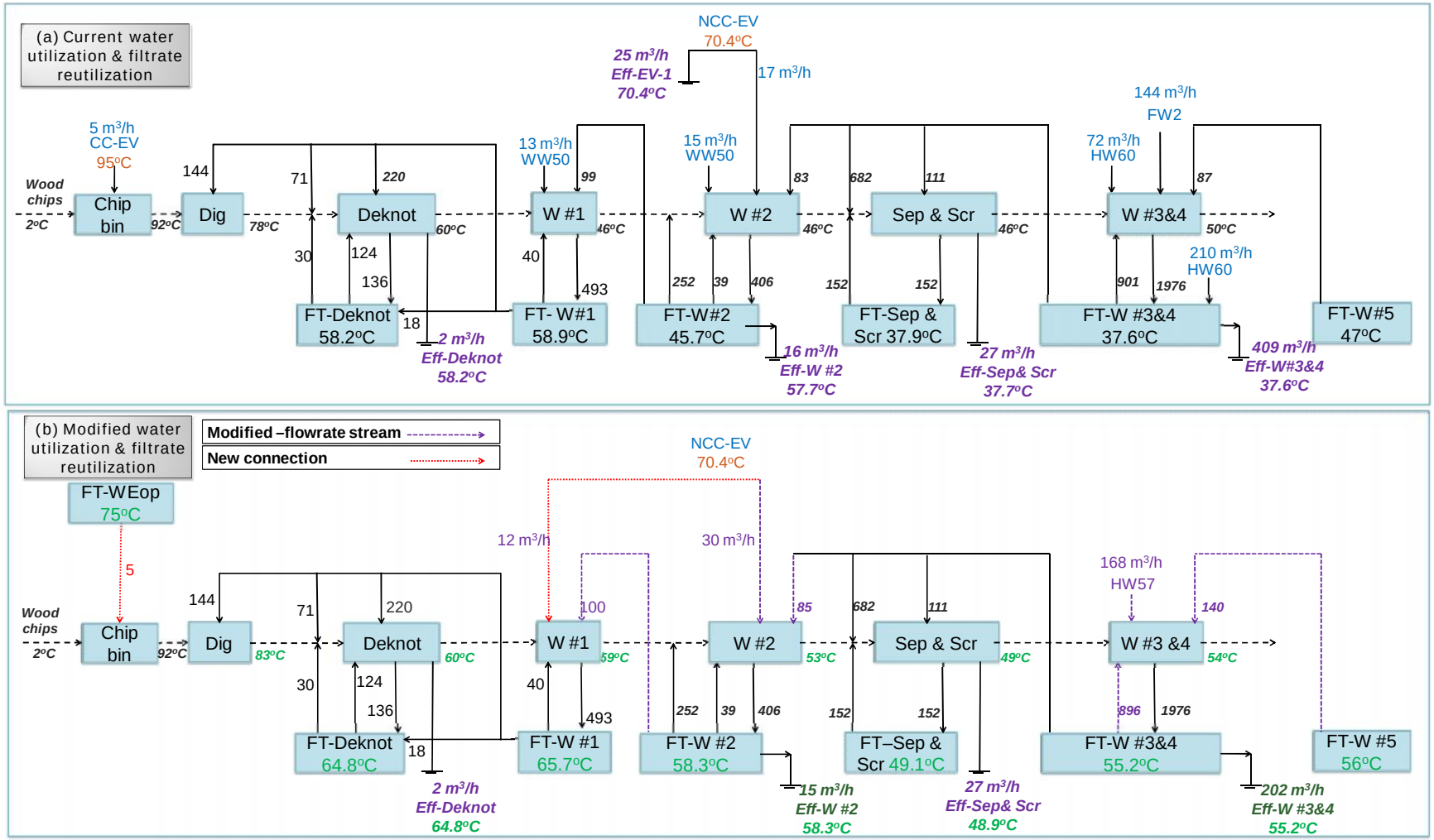

Fig. 5-11 - (a) current, (b) final water utilization and filtrate reutilization in digesting and washing departments – mill C; dotted red lines: new connections; dashed purple lines: the existing connections with change in flowrate (W: washer, FT: filtrate tank, Sep & Scr.: separators and screeners, Dig: digester, Deknot: deknotters, NCC-EV: non-clean condensate of evaporation, WW: warm water: FW: fresh water: HW: hot water, Eff.: effluent)

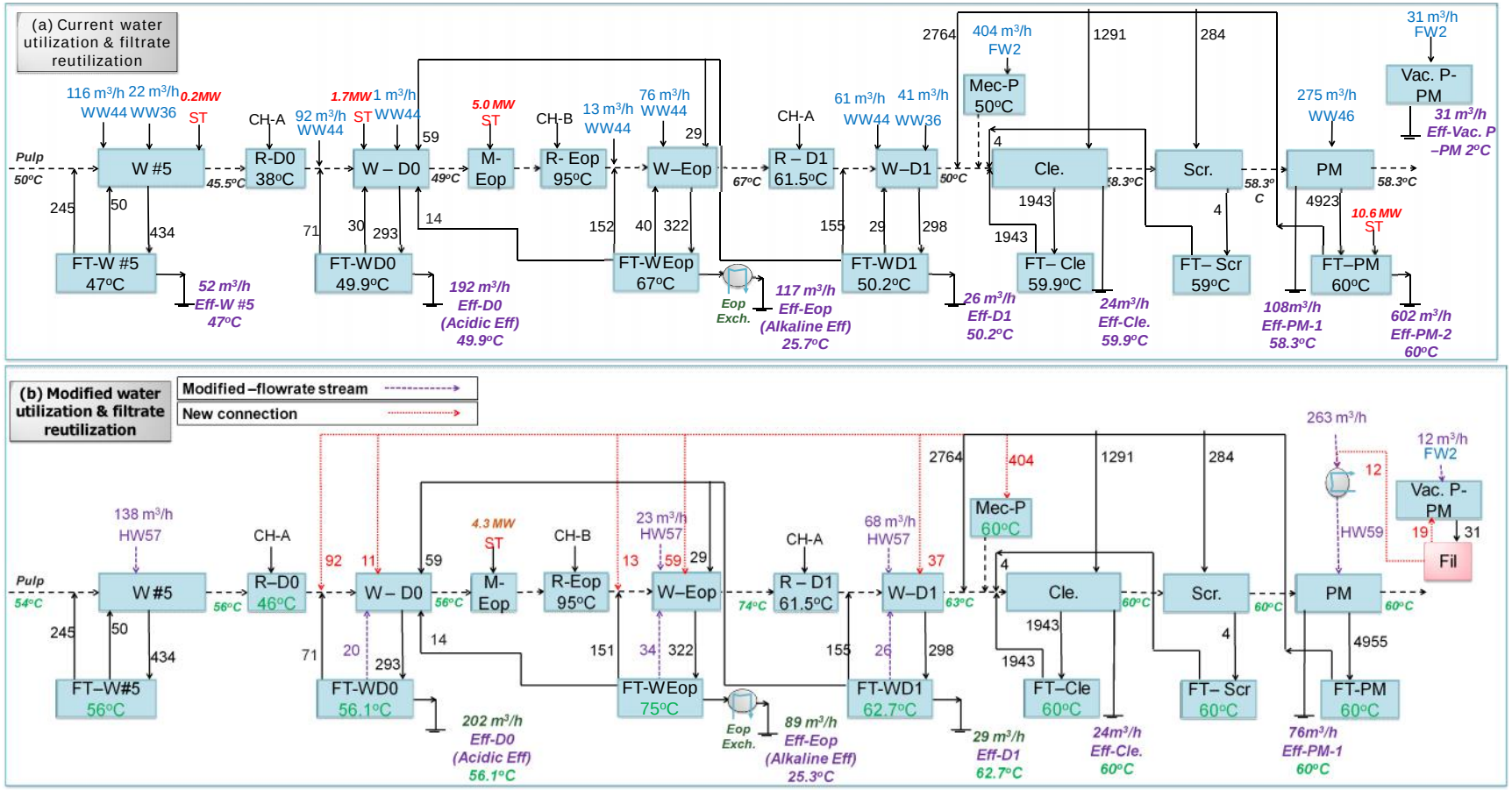

Fig. 5-12 - (a) Current, (b) final water utilization and filtrate reutilization in bleaching and paper machine departments – mill C; dotted red lines: new connections; dashed purple lines: the existing connections with change in flowrate (W: washer, R: reactor; M: steam mixer, FT: filtrate tank, Mec.-P: mechanical pulping, Cle.: cleaners, Scr.: screeners, PM: paper machine, Vac. P: vacuum pump, Fil: filter, WW: warm water: FW: fresh water: HW: hot water, CH-A: acidic chemicals, CH-B: base chemicals, ST: steam, Eff.: effluent)

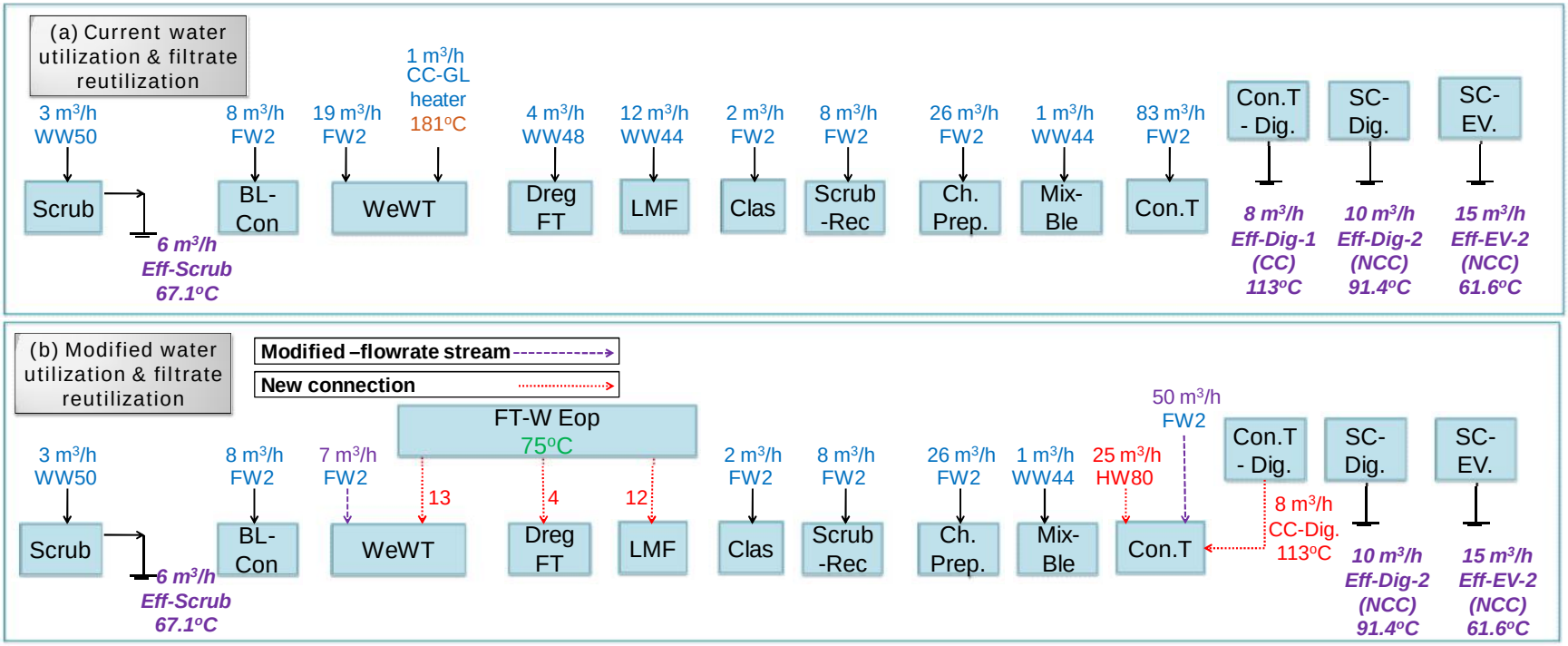

Fig. 5-13 - (a) current, (b) final water utilization and filtrate reutilization in scrubber, recausticizing, chemical preparation, and steam plant department, - mill C; dotted red lines: new connections; dashed purple lines: the existing connections with change in flowrate (Scrub: scrubber, BL-Con: black liquor concentrator, WeWT: weak wash tank, Dreg FT: dreg filter, LMF: lime mud filter, Clas: classifier, Scrub-Rec: scrubber of recauticizing, Ch. Prep.: chemical preparation, Mix-Ble: mixer-bleaching, Con. T: condensate tank, Con. T-Dig.: condensate tank of digesting, SC-Dig.: surface condenser of digesting, SC-EV.: surface condenser of evaporation, WW: warm water: FW: fresh water: HW: hot water, CH-A: acidic chemicals, CH-B: base chemicals, ST: steam, Eff.: effluent)

The data, including the flowrate, temperature, and contaminant concentration for both sinks and sources, are extracted. Table 5-9 presents the sinks in ascending contaminant concentration order.

Table 5-9 – List of all sinks in ascending order of contaminant concentration

Sink	Flowrate (m^3/h)	T (oC)	Contaminant concentration (ppm)
Deknotters	445	57.8	93507
Digester	144	57.6	93028
Chip bin	5	95	55540
Washer #1	152	49.3	27753
Weak wash tank-Recaust.	20	12.9	5987
Washer #2	406	45.2	3048
EOP	309	58.9	2939
D0	267	48.9	2423
D1	286	46.9	2378
Dregs filter tank-Recaust.	4	47.5	2033
Lime mud filter-Recaust.	12	44.4	2033
Mechanical pulping	404	50	363
Cleaners-PM	6002	59.9	346
Screeners-PM	284	60	343
Separators & Screeners-washing	945	37.7	231
Washer #3 & 4	1204	35.4	173
Washer #5	433	45.7	17
Scrubber	3	50	0
Paper machine-PM	279	46	0
Mixer#2-Bleaching	1	44.4	0
BL concentrator-Scrubber	8	2	0
Classifier-Recaust.	2	2	0
Scrubber-Recaust.	8	2	0
Chemical prep.	26	2	0
Condensate tank	101	2	0
Vacuum pump	31	2	0

Table 5-10 presents the sources, which are the filtrates that leave each stage, excluding those streams that cannot be reutilized in process and must be sent to wastewater treatment as inevitable effluents.

The inevitable effluent in the Kraft process can be divided into three different categories. In the first category, the streams contain a high level of contamination, such as non-clean condensate from surface condensers of evaporation and digesting. The streams making up the second group must be discharged in order to prevent the accumulation of big solid particles in the pulp line, such as rejects from deknotters, separators and screeners of washing and cleaners of the paper machine. Finally, in the third category, there are the streams that should be drained away to avoid the accumulation of the chemicals, such as acidic effluent of D0 and alkaline effluent of Eop. The inevitable acidic and alkaline effluents account for 29 and 18% of the filtrates that

leave the D0 and Eop washers, respectively (Keshtkar et al., 2013). The respective values, however, in the current operation of the mill are 36 and 66%. This shows the high water and chemical loss in the bleaching section of this mill and leaves the room for improvement. Table 5-11 lists all inevitable effluents from three categories in mill C.

Table 5-10 – List of all sources in ascending order of contaminant concentration

Source	Flowrate (m^3/h)	T(oC)	Contaminant concentration (ppm)
Deknotters	136	58.2	94593
Washer #1	493	58.9	93028
Eop‡	264	67	4194
Washer #2	406	45.7	4183
D1	298	50.2	3670
D0‡	208	49.9	3649
Screeners-PM	4	59	363
Cleaners-PM	1926	59.6	346
Paper machine-PM	4968	58.3	343
Separators & Screeners-washing	152	37.9	240
Washers #3 & 4	1976	36	229
Washer #5	434	47	25
Condensate tank-Digesting	8	113	0
Non-clean condensate-Evap.	42	70.4	0
Vacuum pump	31	2	0

‡After subtraction from inevitable effluent

Table 5-11 – List of all inevitable effluents

Inevitable effluent	Flowrate (m^3/h)	T(oC)	Contaminant concentration (ppm)
Deknotters	2	58.1	94538
Separator & Screeners-Washing	27	37.7	144
Cleaners-PM	24	59.9	339
Non clean condensate of SC-Digesting	10	91.4	
Non clean condensate of SC-Evap.	15	61.6	
Scrubber effluent	6	67.1	
Eop *	58	67	4194
D0 †	85	49.9	3649
Total	**227**		

*Alkaline effluent: 18% of filtrate from Eop washer (currently: 66%) (Keshtkar et al., 2013)

†Acidic effluent: 29% of filtrate from D0 washer (currently: 36%) (Keshtkar et al., 2013)

5.6.2 Step 2: Constraint analysis

Several potentials for steam saving could be determined in the pulp line. There are four steam injection points (Fig. 5-11a to 5-13a),where the steam can be diminished; washer #5 (W #5), the D0 washer (W-D0), the Eop steam mixer (M-Eop), and the white water tank of the paper

machine (FT-PM). There are also two other points located in the steam plant (deaerator) and recausticing (green liquor heater) where the steam can potentially be saved.

The bleaching department consists of three reactors (Fig. 5-12a), R-D0, R-Eop, R-D1, and temperature is one of the principal parameters of their efficiency. The acceptable temperature for R-D0, R-Eop, and R-D1 is in the range of 20-80, 60-95, and 60-80°C, respectively (Brogdon and Bell, 2004; Georgia Tech, 2013; Smook, 2002; van Lierop et al., 2008). Therefore, when the projects are identified, the temperature of these units should not exceed the acceptable temperature.

Several washers are used in the pulp line to wash the pulp. Every type of washer receives the water at a certain temperature level and beyond this temperature, it does not perform properly. The typical temperature of water to common pulp and paper washers are collected (Brännvall, 2009; Garza Villarreal, 2011; Orzechowska, 2006; Turner et al., 2001) and presented in Table 5-12. The current case study involves three compact baffle filter washers (W #1, 2, and 5), two rotary vacuum drums (W #3 and 4) in the washing section, and three compact baffle filter washers (W-D0, W-Eop, and W-D1) in bleaching section (Fig. 5-11a and 5-12a). Similar to bleaching reactors, to identify the projects for water and energy improvements, the temperature of supplied water or filtrate to these washers should be kept lower than typical values.

Table 5-12 – Acceptable temperature of filtrate and water to different types of washer

Washer	Typical temperature (^{o}C)
Rotary vacuum drum (RVD)	80-85
Compact baffle filter (CBF)	<100
Diffusive washers	<100

5.6.3 Step 3: Water and energy analysis

The Water & Energy Pinch curves for all sinks and sources are constructed in Fig. 5-15a using extracted data from Table 5-9 and 5-10. This graph consists of contaminant concentration versus flowrate and temperature versus flowrate for both sinks and sources. The Pinch point occurs at the flowrate of 10911 m^3/h, sink contaminant concentrations of 231 and 173 ppm, and source contaminant concentrations of 229 and 25 ppm. These curves are used to determine the

modifications in water closure of the process using the water reutilization rules. As was mentioned in Part I, the other heuristic rules can also be defined based on the nature of the process for the identification of water reutilization projects (Keshtkar et al., 2013). In the case of the pulp and paper process, two other rules can be recognized as follows:

Rule 5 – Do not use the effluent from recausticizing at the pulp line (Fig. 5-14): the effluent from recausticizing contains many ionic metals and other contaminants and if it is reutilized in the pulp line, it may damage the quality of the produced pulp. It therefore should be avoided.

Rule 6 – Use the alkaline effluent of the pulp line in recausticizing (Fig. 5-14): a portion of chemicals (NaOH and Na_2S) that are used for cooking in the digester is lost in the pulp line and recovery loop. The chemical make-up is required to compensate for this loss. Alkaline effluent of the pulp line contains a significant amount of NaOH and if it is reutilized at recausticizing, the total amount of the make-up chemical requirement and water consumption at this section would be reduced considerably (Keshtkar et al., 2013).

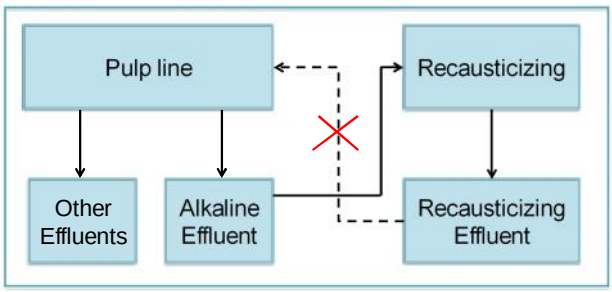

Fig. 5-14 - Simple schematic of rules 5 and 6 to identify projects;
Rule 5: Do not use the effluent from recausticizing at pulp line and
Rule 6: Use the alkaline effluent of pulp line in recausticizing

Figure 5-15a is used to identify the supply water for the sinks based on the existing sources and clean water levels. The final modification of Fig. 5-15a after providing the water for each sink is displayed in Fig. 5-15b. The Pinch point is moved towards the left side at the flowrate of 10175, the sink contaminant concentrations of 231 and 173 ppm, and the source contaminant concentrations of 229 and 173 ppm. This analysis results in a reduction of water consumption from 1760 to 800 m^3/h in both Kraft and mechanical pulping. The total water savings is significantly large and accounts for 54% of current water consumption. Subsequently, the total effluent reduction is 970 m^3/h or 57% of current effluent production.

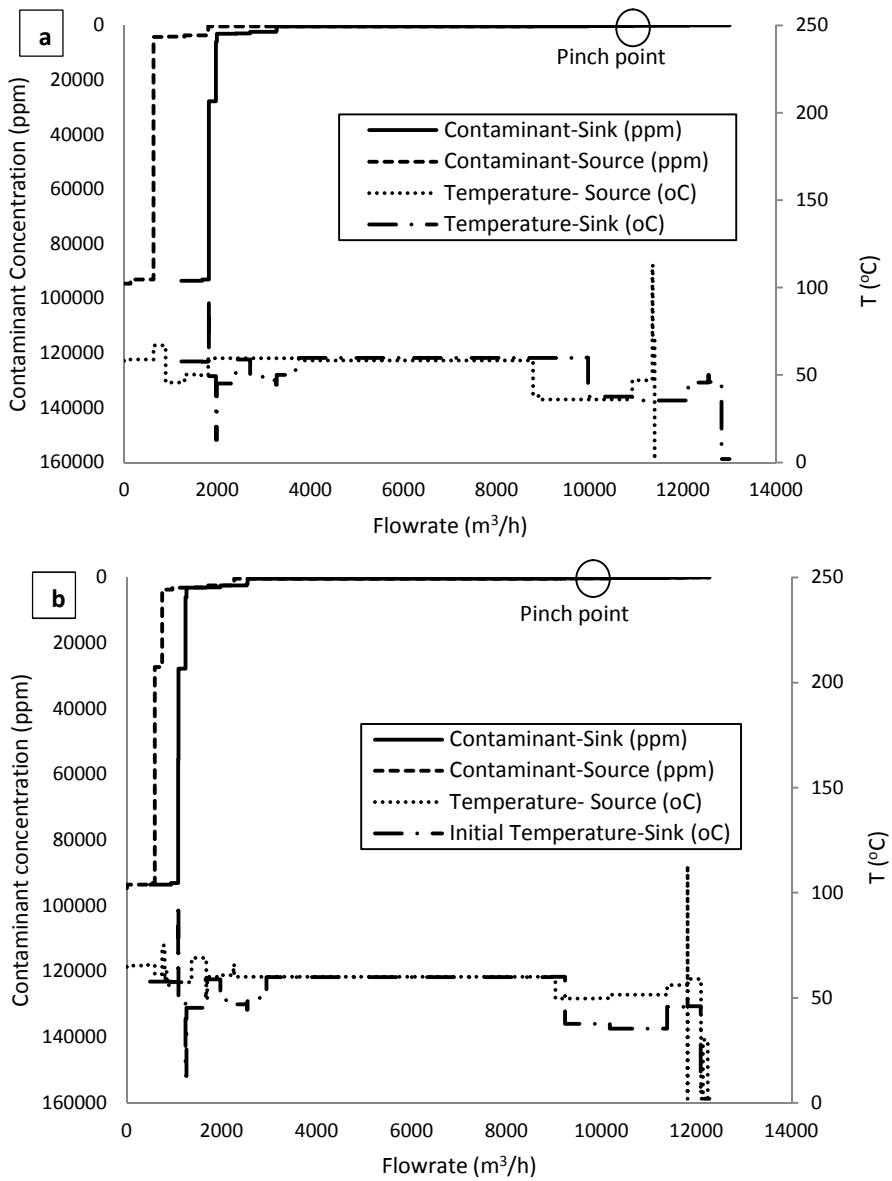

Fig. 5-15 – Water & Energy Pinch Curves; (a) before and (b) after identification of water projects

5.6.4 Step 4: Hot and warm water network analysis

The saved water of step 3 should be reduced at the origin in the water network. Figure 5-16a illustrates the current hot and warm water network of the mill. The main temperature levels of utilized water are 46, 36, 44, 50, and 60°C. The yellow HEXs are the ones that recover the heat from process streams while the red HEXs utilize the steam for water heating. The first objective of this step was to eliminate steam consumption for hot or warm water production. Then the network is redesigned based on the existing process HEXs and the available heat load of each of these HEXs in order to generate water at a higher temperature. Since less water (800 vs. 1760

m^3/h) is required, the higher temperature for hot and warm water can be achieved using existing HEXs. Figure 5-16b displays the modified hot and warm water network. The main temperature levels of utilized water rise to 57, 59, and 80^oC. Utilization of water at these new temperatures raises the temperature of the pulp line and also the condensate tank of the steam plant and decreases the total steam injection in the pulp line and deaerator of the steam plant. The existing area and current and final heat load of the process and steam HEXs for hot and warm water production are presented in Table 5-13. The area does not change, but the heat load does, because the final temperature levels of water are higher than what they currently are. Therefore, in order to maintain the same area, the heat load should be decreased.

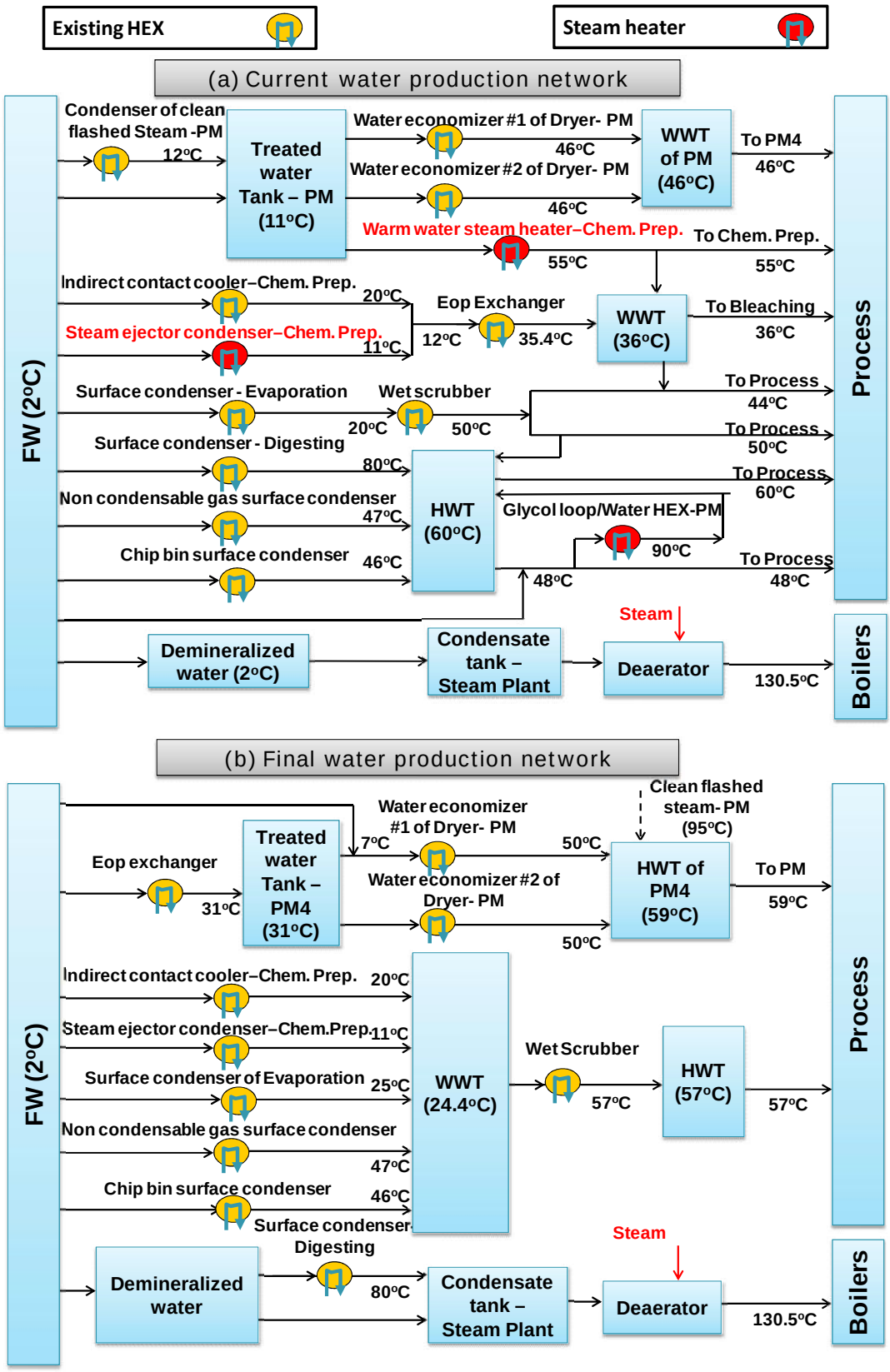

Fig. 5-16 – (a) Current and (b) final water production network

Table 5-13 – Existing area and current and final heat load of process and steam HEXs

HEX	Area (m^2)	Heat exchanged (MW)	
		Current	Final
Surface condenser- Digesting	18	2.2	2.2
Surface condenser- Evaporation	79	9.9	8.8
Wet scrubber	12218	16.8	15.2
Indirect contact-Chem. Prep.	249	0.6	0.6
Non condensable gas surface condenser	50	0.2	0.2
Chip bin surface condenser	206	0.7	0.7
Eop exchanger	965	5.5	6.3
Water economizer #1 – PM	2621	5.6	5.6
Water economizer #2 – PM	2621	5.6	3.7
Surface condenser – PM	14	2.7	2.7
Total of heat recovered from waste stream using existing HEX		**50**	**46**
Steam ejector- Chem. Prep. ‡	36	1.8	0.3
Water HEX of Glycol loop – PM	237	3.8	Removed
WW steam heater – Chem. Prep.	1	0.2	Removed
Total heat from the steam (MW)		**5.5**	**0**

‡ This HEX is employed to cool down the produced chemicals at chemical preparation plant. The steam is mixed with chemicals at this HEX to produce the warm water. In the final design, the steam part is removed; however, there is still the heat load of chemical cooling.

5.6.4.1 Final configuration of the process line

The hot and warm water with new temperatures are substituted for the current water temperatures. This step is incorporated into step 3 and results in raising the water temperature to different sinks of the pulp line and recovery loop, as shown in Fig. 5-17. This rise in temperature reduces the total steam consumption at the pulp line, recovery loop and steam plant. Table 5-14 summarizes the steam savings in both the water network and steam injection points. The total steam savings is 32 MW and accounts for 29% of the current steam consumption of the whole mill.

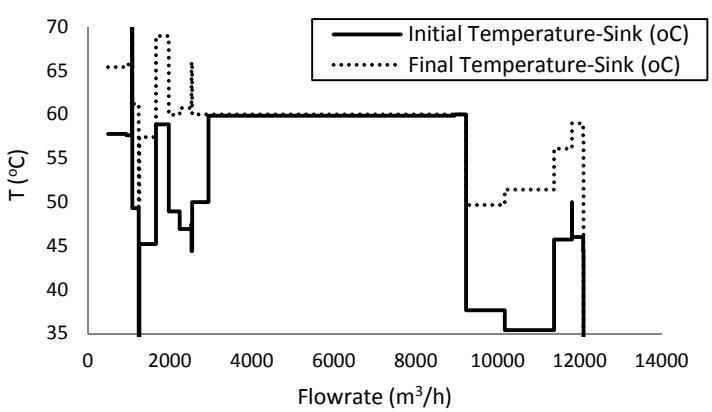

Fig. 5-17 – The change in temperature of total water and filtrate to sinks in current conditions and after applying SEWNA

Table 5-14 – Summary of steam saving at water network and steam injections in process line

#	Point of steam saving	Equipment	Steam consumption (MW)	
			Current	Final
1	Water Network	Glycol loop – PM	5.3	0
2		Water heater – Chem. Prep.	0.3	0
3		HW production-Steam ejector condenser – Chem. Prep.	1.5	0
4	Steam injection points	Pre-D0 washer	0.2	0
5		D0 washer- Bleaching	1.7	0
6		Eop– Bleaching	5	4.3
7		Silo chest – PM	10.6	0
8		Deaerator – Steam plant	17.3	7.9
9		Green liquor heater – Recaust.	1.1	0
10		Air heater – PB#3	1.9	0.7‡
		Total	**44.9**	**12.9**

‡the saved steam can be used to reduce steam generation at PB #3. Thus, the steam consumption to preheat the air decreases.

The final changes in water utilization and filtrate reutilization of the whole mill after applying step 3 and 4 are demonstrated in Fig. 5-11b to 5-13b. The dashed purple lines show the change in the flowrate of the existing connection and the dotted red lines show the new connections. The total number of changes that is carried out in the flowrate of existing connections is 11 while 13 new connections for filtrate reutilization should be implemented. In contrast to other studies (Mateos-Espejel et al., 2010a, b), which assumed that all existing connections of filtrate reutilization are efficient, the results of this study show that some of the existing connections require modifications in their flowrate in order to reach larger steam and water savings.

5.6.4.2 Summary of water and steam savings and effluent reduction

Steam and water consumption and effluent production before and after applying all modifications are shown in Fig. 5-18. Steam is saved at bleaching, the paper machine, the steam plant, and recausticizing (Fig. 5-18a). Water consumption is reduced at digesting, bleaching, and recausticizing of the Kraft process and mechanical pulping (Fig. 5-18b) while effluent production is decreased at digesting, washing, bleaching, paper machine, and evaporation (Fig. 5-18c). This shows that the effluents from these departments are reutilized effectively in the same or previous departments and results in considerable water savings.

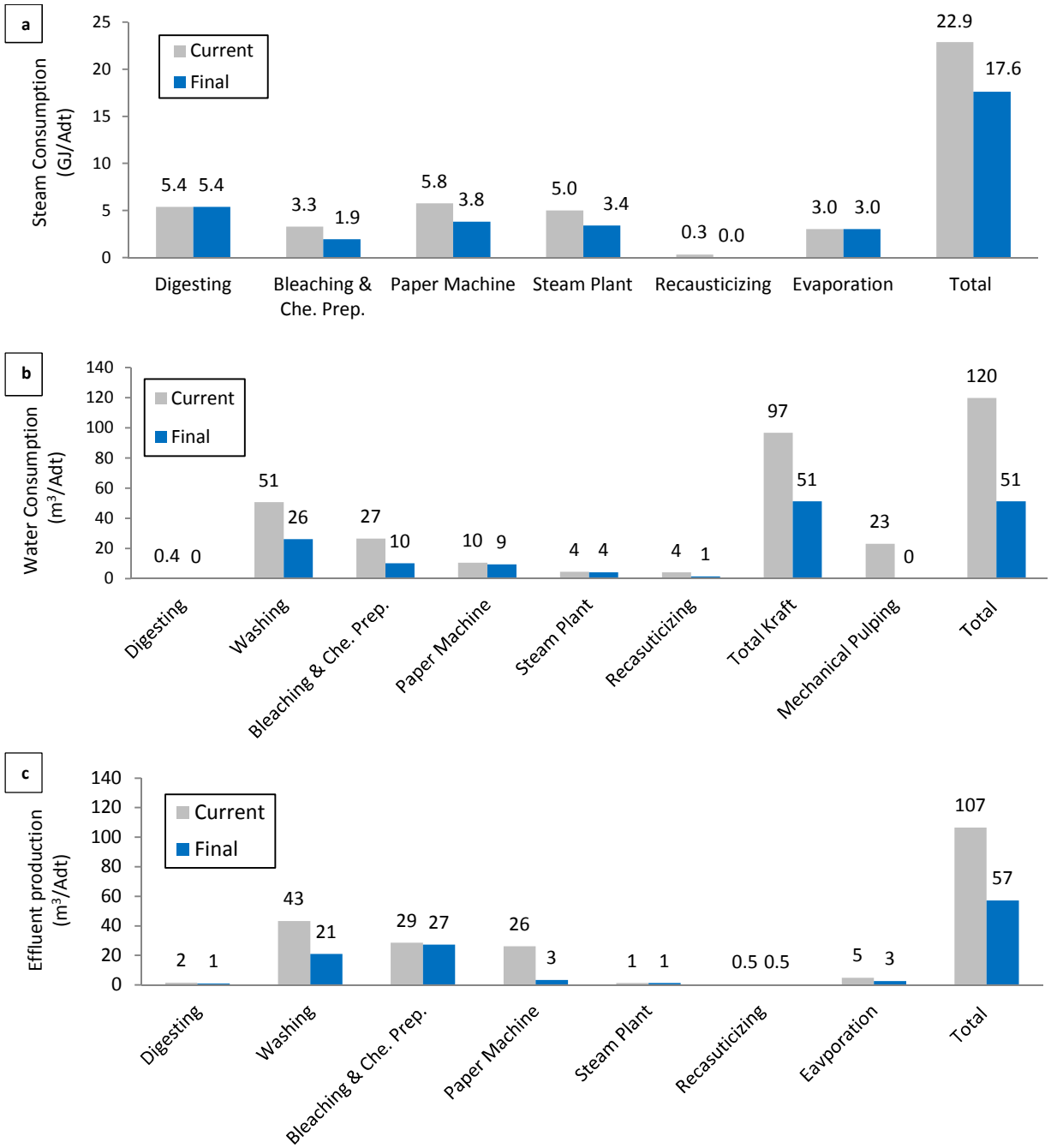

Fig. 5-18 – Current and final, (a) steam consumption, (b) water consumption, and (c) effluent production – Mill C

5.6.5 Step 5: Economic analysis

The summary of all proposed new connections and the capital cost requirements for piping are presented in Table 5-15. For all the new connections, the length of the pipe is assumed to be 150 m. The total piping cost is 1.8 M$.

Table 5-15 – List of new connections and the capital cost for purchasing, insulation, and installation of new pipes

Pr. #	Project Name	New stream connection		Flowrate (m^3/h)	Cost (M$)
		From	To		
1	Chip bin	Filtrate tank – Washer Eop	Chip bin	5	0.10
2	Washer #1	Non-clean condensate-Evap.	Washer #1	12	0.11
3	D0	Filtrate tank -PM	Before & at D0 washer	103	0.18
4	Eop	Filtrate tank -PM	Before & at Eop washer	72	0.15
5	D1	Filtrate tank -PM	At D1 washer	37	0.13
6	Mechanical pulping	Filtrate tank -PM	Mechanical pulping	404	0.41
7	Paper machine (PM)	Vacuum seal water-PM	Paper machine	12	0.11
8	Vacuum pump-PM	Vacuum seal water-PM	Vacuum seal water-PM	19	0.11
9	Weak wash tank –Recaust.	Filtrate tank – Washer Eop	Weak wash tank –Recaust.	13	0.11
10	Dregs filter – Recaust.	Filtrate tank – Washer Eop	Dregs filter – Recaust.	4	0.10
11	Lime mud filter – Recaust.	Filtrate tank – Washer Eop	Lime mud filter – Recaust.	12	0.11
12	Condensate tank-steam plant	Condensate tank of digesting	Condensate tank of steam plant	8	0.10
13	Condensate tank-steam plant	HW80	Condensate tank of steam plant	25	0.10
		Total		**726**	**1.82**

The saved steam of 32 MW can be used to reduce total fossil fuel consumption at the natural gas power boilers. This mill has three natural gas power boilers (PB) to produce steam. The PB #2 can be completely shut down (15 MW) and the steam generation at PB #3 can be reduced by 17 MW, so the total natural gas savings is 3800 GJ/d. The following assumptions and also economic data from the mill are employed for the profitability calculation:

- The natural gas price is 6.0 $/GJ.
- The price of fresh water is 0.0175 $/m^3.
- The price for effluent treatment is 0.069 $/m^3.
- Number of operating days is 354 (Browne et al., 2011).

The total effluent production, and water and natural gas savings are translated into costs and summarized in Table 5-16. The natural gas savings represents the biggest portion of 8.8 M$/a total savings, while the piping is the main capital cost associated with the changes. This results in a significantly short payback period of 0.2a, which makes it extremely attractive for investment.

Table 5-16 - The economic benefits of savings from different resources – Mill C

Effluent Reduction (m^3/h)	Water saving (m^3/h)	Steam saving (MW)	NG saving (GJ/d)	Effluent Reduction (M$/a)	Water saving (M$/a)	NG saving (M$/a)	Total saving (M$/a)	Piping cost (M$)	Payback period (a)
960 (54%)	970 (57%)	32 (29%)	3800	0.6	0.2	8.0	8.8	1.8	0.2

The results are compared with the previous study (Mateos-Espejel et al., 2011c), which assumed that all existing connections of water reutilization are efficient. The authors sequentially applied Water and Thermal Pinch Analyses to a similar Kraft mill (700 Adt/d of pulp production) in terms of water and steam consumption. The water consumption was 110 m^3/Adt and a savings of 34% was achieved, while in the case of mill C, savings of 54% (Table 5-16) were achieved. Steam consumption was 21.1 GJ/Adt and a savings of 8.5% was accomplished whereas in the case of mill C, steam savings of 29% were obtained. This shows that the results of SEWNA are substantially superior to other similar studies using other techniques.

5.7 Summary of the Application in Two Other Canadian Kraft Mills (A and B)

The simultaneous energy and water networks analysis (SEWNA) is also applied in two other Canadian mills (mill A and B). Mill A is a dissolving Kraft pulp mill and manufactures 750 Adt/d of pulp. Mill B is a Kraft paper pulp mill with two separate lines, lines 1 and 2, and produces 1765 Adt/d of pulp. Mill C is the case study, which has been explained in detail in the previous sections. Figure 5-19 compares the total pulp/paper production, steam and water savings, and effluent reductions of these three mills using SEWNA. The water saving for different cases varies in the range of 24-54% depending on how efficient the water reutilization currently is in the mill. For example, in mill B, 10 m^3/Adt of water reduction results in water savings of 24%, indicating that this mill is currently efficient in terms of water reutilization whereas in the case of mill C, 68 m^3/Adt of water savings is equivalent to 54% in water reduction, which shows the inefficient current water reutilization. The water reduction and effluent reutilization in all cases yield significant steam savings, ranging between 11-29% of current consumption.

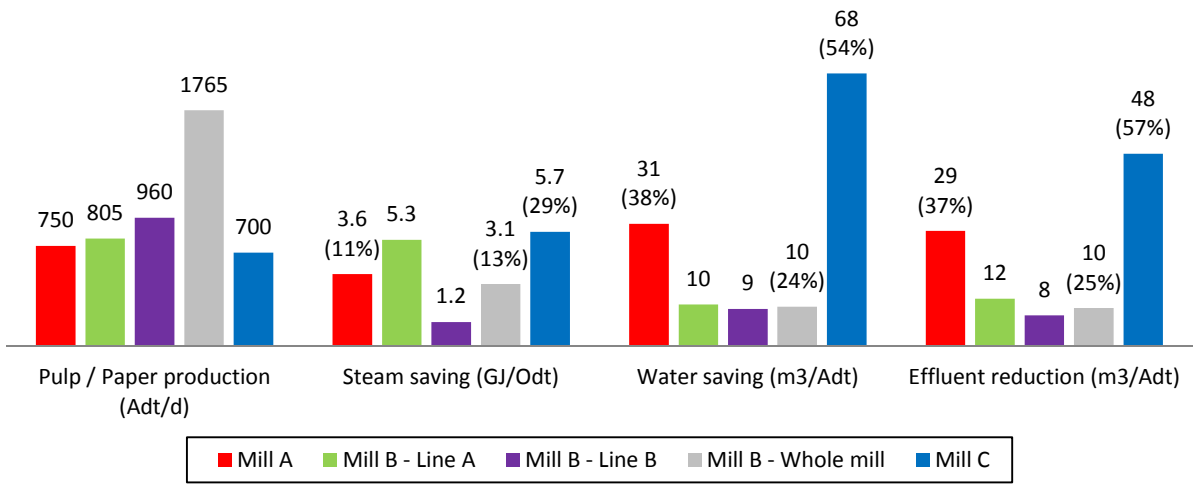

Fig. 5-19 – The steam and water savings and effluent reduction of applying SEWNA on the other two Canadian Kraft mills (mill A and B) and a comparison between the three mills (mill A, B, and C)

The economic aspects of three mills are compared in Fig. 5-20. The graph shows that mill B requires significant investment for new piping, however, its water savings is the lowest among the three mills (Fig. 5-19), while mill C has much lower capital costs (Fig. 5-20) yet greater water savings (Fig. 5-19). It should be noted that in paying more attention to existing water management, additional effort will be required to identify new water saving potential, the more new connections required, and the higher capital cost needed. Payback period for all cases are short, however, in the case of mill B it is much longer than the other two cases. There are two reasons for the longer payback period of mill B; first is the higher capital cost and second is the smaller net profit. The net profit is mainly the result from the reduction of steam generation in power boilers. Mill A and C consume fossil fuel and hog fuel in their power boilers while mill B only has one hog fuel boiler. Therefore, in the case of mill A and C, the steam reduction leads to larger profit than the steam reduction at mill B, however, the saved steam in mill B is more than mill A (Fig. 5-19).

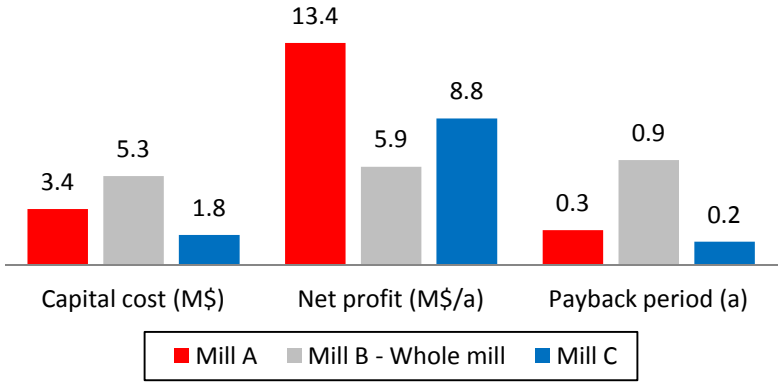

Fig. 5-20 - The capital cost, net profit, and payback period after applying SEWNA on two other Canadian Kraft mills (mill A and B) and a comparison between the three mills (mill A, B, and C)

5.7.1 Benchmarking of water and steam consumption

The water and steam consumption of three mills for their current status and after applying SEWNA are benchmarked with reference data (Fig. 5-21). The water consumption is benchmarked against the average mills designed in the 1960s and 1980s (Johnston et al., 1996; Turner et al., 2001). The steam consumption is benchmarked against the reference data from the survey conducted by the Pulp and Paper Research Institute of Canada (Paprican) (CIPEC, 2008).

Figure 5-21a shows that using SEWNA, it is possible to reduce significantly the water consumption and bring it close to mills designed in the 1980s for all three cases. Figure 5-21b illustrates the steam consumption for the three mills. Mill A is a dissolving Kraft pulp mill with a batch digester and is benchmarked against the data for Kraft *paper* pulp with a batch digester due to a lack of data for benchmarking against *dissolving* Kraft pulp with a batch digester. The principal difference between *dissolving* and Kraft *paper* pulp is that there is an extra step before digesting, called pre-hydrolysis, to separate the hemicelluloses. Therefore, it is possible to divide the mill into two parts for benchmarking; the pre-hydrolysis and the Kraft *paper* pulp with batch digester (Keshtkar et al., 2013). The yellow portion of total steam consumption indicates the steam consumption of the pre-hydrolysis (3.1 GJ/Adt) and the rest is allocated to Kraft paper pulping with the batch digester. For this mill, the steam consumption smaller than the 75th percentile of Canadian mills can be accomplished using SEWNA. The steam consumption of mill B and C after applying SEWNA is less than median Canadian mills. These results suggest

that this technique could yield high steam savings and improve the energy efficiency of the whole process, by simply adding new piping for some streams at a small capital cost.

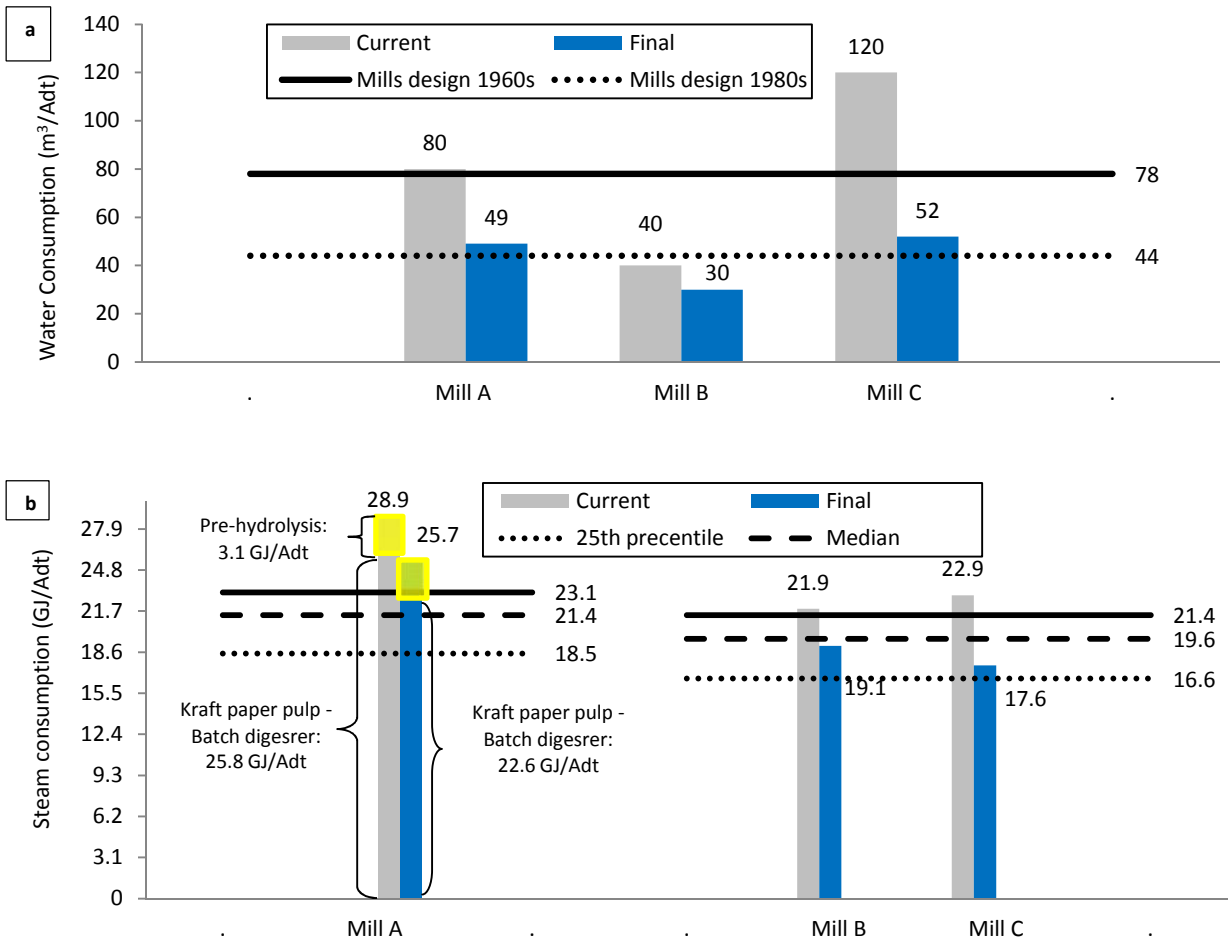

Fig. 5-21 – Benchmarking of (a) water consumption and (b) steam consumption of three mills (mill A, B, and C) before and after applying SEWNA

5.8 Conclusion

The simultaneous energy and water networks analysis (SEWNA), presented in Part I of this paper, has been applied in three Canadian Kraft pulp and paper mills (mill A, B, and C). The detailed results have been shown for mill C while for both mills A and B only the final results have been displayed. The substantial steam and water savings in the range of 11-29% and 24-54%, respectively, have been accomplished. They demonstrated that using this technique, the water and steam consumptions can be reduced significantly.

The results confirmed that the existing water reutilization can be improved. They proved that the new established rules for water reutilization and also new Water and Energy Pinch Curves are considerably more effective. Furthermore, they showed the importance of analyzing the existing hot and warm water networks from both steam saving and economical perspectives. This analysis yielded the steam removal for hot and warm water production. It led to water production at higher temperatures, which resulted in steam reduction on the process line. It also avoided the proposal of new heat exchangers for warm and hot water production. The comparison of overall results with other similar studies also showed the superiority of the results of this technique over other current engineering practices.

New connections were required for new piping for filtrate reutilization or water utilization. The piping costs of 2.4, 5.3, and 1.8 M$ has been estimated for mill A, B, and C, respectively. This shows that if the current water system is well-managed, it will be more difficult to identify water projects and more new connections will be required, at a greater piping cost (mill B). A total savings of 13.4, 5.9, and 8.8 M$/a has been achieved for mills A, B, and C, respectively. The main reason for the low savings of mill B in comparison to the other two mills (mill A and C) is that at mill B, hog fuel was the principal source of savings while in the two others, fossil fuel savings was the main contributor to the total savings. Accordingly, the payback period for the mills A and C was respectively 0.3 and 0.2a while for the mill B it was 0.9a. If fossil fuel savings is the main source of energy saving (Mill A and C), the payback period is shorter whereas if hog fuel savings is the main source of energy saving (Mill B), the payback period is longer.

6 CHAPTER 6: EQUIPMENT PERFORMANCE ANALYSIS TECHNIQUE

This chapter is a preliminary analysis of equipment and departments and could be used as a starting point for further detailed and in-depth analysis. The objective is to develop a systematic methodology to analyse, characterize, and diagnose the performance of each equipment and department from the standpoint of energy (steam) and water efficiency. The probable causes were identified and the probable remedial projects were proposed. Finally, the economic aspects of these improvements have been preliminarily evaluated. This technique has been applied on mill C as case study.

6.1 Nomenclature of This Chapter

a	Annual	A	Cross-sectional area of pipe (m^2)
Adt	Air dried ton	BHF	Burning heat of fuel (GJ/d)
BLF	Blowdown flash	C	Consistency
C_d	Discharge consistency	d	Day
DCF	Discharge factor	DF	Dilution factor
DR	Displacement ratio	Eco.	Economy of evaporation or dryer (t/t)
EDR	Equivalent displacement ratio	E_{st}	Modified Norden efficiency factor
FCB	Fuel consumption of boiler (GJ/GJ)	FF	Flowrate of fibre (t/d)
FL	Flowrate of filterate leaving the washer (t/d)	GL	Green liquor
H_{BFW}	Enthalpy of boiler feedwater (GJ/d)	H_{Cout}	Enthalpy of condensate out of process to condensate tank of steam plant (GJ/d)
HHV_{NG}	Higher heating value of natural gas	H_{STB}	Enthalpy of generated steam by boiler (GJ/d)
H_{STin}	Enthalpy of steam in process (GJ/d)	HW	Hot water
HWT	Hot water tank	ICF	Inlet correction factor
kPa	Kilopascal	KPI	Key performance indicator
LP	Low pressure	MP	Medium pressure
MRDS	Maximum reduction of dissolved solids at washer	Odt	Oven dried ton
PI	Process integration	PP	Paper production (Odt/d)
RDS	Reduction of dissolved solids at washer	ST	Steam consumption (%)
STD	Steam consumption at deaerator (GJ/d)	ST_{DC}	Steam for drying or concentrating (t/d)
SPB	Steam production at boiler (GJ/d)	t	Ton
TEC	Thermal energy consumption (GJ/Odt)	TEP	Thermal energy production (GJ/d)
WE	Water evaporated (t/d)	WL	Flowrate of wash liquor and clean water to washer (t/d)
WP	Washed pulp at washer (Odt/d)	WW	Warm water

6.2 Equipment Performance Analysis Technique

The overall methodology for equipment and department performance analysis is presented in Fig. 6-1. It consists of four major steps: identification, diagnosis, performance improvement, and economic analysis. It should be noted that the simulation model of the mill is the main source of data for analysis.

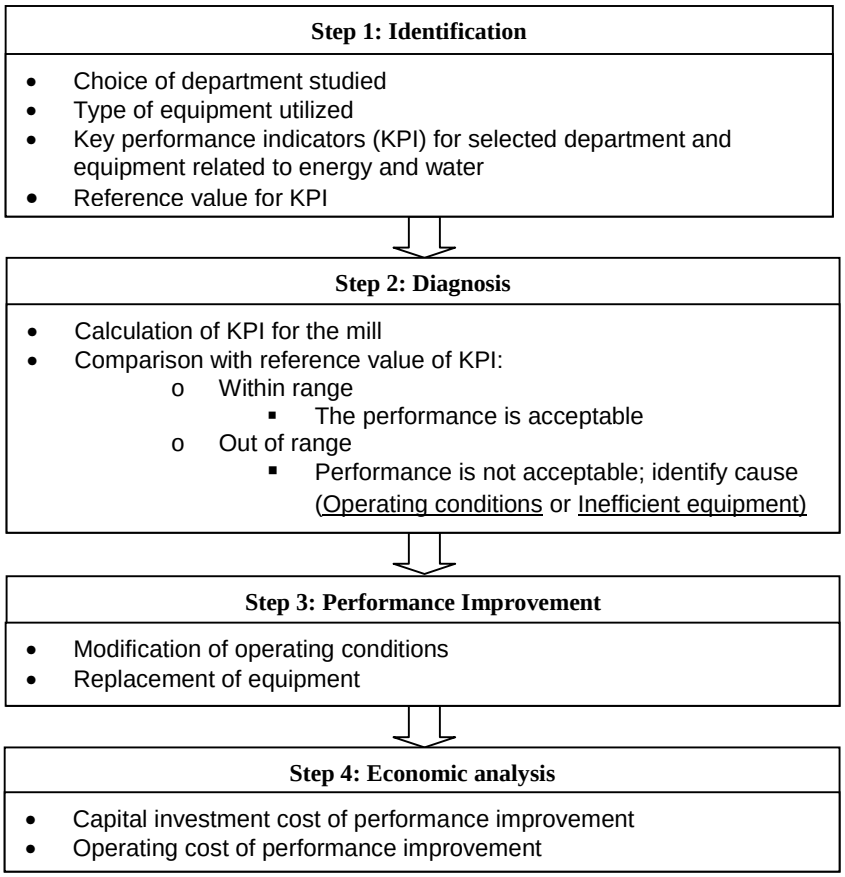

Fig. 6-1 - Methodology of equipments and department performance analysis

6.2.1 Step 1: Identification

The departments and the types of equipment utilized are determined. The key performance indicators (KPIs), which characterize the energy or water performances of the department and equipment, are identified based on the published data. KPIs when used efficiently can quickly show the areas that have opportunities for energy and water savings. KPIs already exist for most equipment, including the washers, dryers, evaporators, boilers, and deaerator and for most departments, such as digesting, bleaching, and recausticizing.

6.2.1.1 KPI of digesting, bleaching, and recausticizing

The main KPI for these departments is the thermal energy consumption (TEC) (CIPEC, 2008) :

$$TEC = \frac{H_{STin} - H_{Cout}}{PP} \qquad [1]^1$$

Since this mill is a combination of Kraft and mechanical pulping, the base of production for calculation in GJ/Odt is different for each department. Digesting, washing, bleaching, evaporation, chemical preparation, recovery boiler, and recausticizing are part of the Kraft line and Kraft production is used for their calculation. Total Kraft pulp production is 255 Odt/d. In the paper machine, Kraft and mechanical pulp are blended and the base of production for calculation at this department is the total paper production of the mill, which is 630 Odt/d. Power boilers are installed to supply enough heat for the paper machine and 630 Odt/d of paper production is used as the base for computation. Another KPI to evaluate the water performance of the bleaching and chemical preparation departments is water consumption (m^3/Adt).

6.2.1.2 KPIs of washers in washing department

The washers are the equipment that remove the impurities from the pulp using water. They are widely used in Kraft mills, in particular, in the washing section where a series of countercurrent ones are employed. To better understand the KPIs for the washers of the washing department, a schematic of a washer is shown in Fig. 6-2.

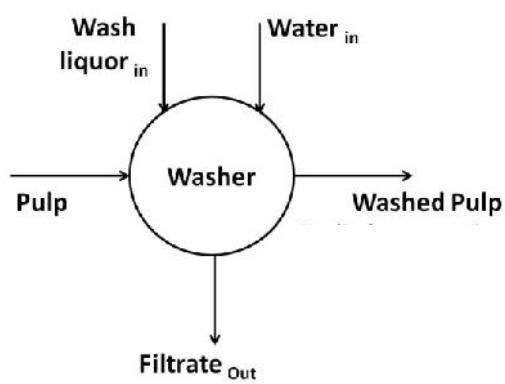

Fig. 6-2 - Simplified schematic of a washer

KPIs for washers have been presented in several studies (Crotogino et al., 1987; Luthi, 1983; Miliander, 2009; Stromberg, 1991). These KPIs are divided into two categories: those that represent the amount of wash liquor and water used, such as the dilution factor (DF), and those

[1] The symbols are defined in the Nomenclature section of this chapter

that represent the efficiency of the washing, such as equivalent displacement ratio (EDR). The high DF represents the high water consumption at the washer and the big EDR shows the efficient washing. DF (Ek et al., 2009) and EDR (Luthi, 1983) are defined as follows:

$$DF = \frac{WL-FL}{WP} \quad [2]$$

$$EDR = (1 - DR)(DCF)(ICF) + 1 \quad [3]$$

Displacement Ratio (DR) is the parameter that shows the efficiency of displacing in the washer,

$$DR = \frac{RDS}{MRDS} \quad [4]$$

Discharge Factor (DCF),

$$DCF = \frac{100-C_d}{7.33 \times C_d} \quad [5]$$

C_d and ICF denote the discharge consistency and inlet correction factor for calculation, respectively. ICF for dilution and thickening washers with no displacement washing is defined as follows:

$$ICF = \frac{99}{[99+DF+\left(\frac{100-C_d}{C_d}\right)]} \quad [6]$$

Discharge consistency (C_d) represents the total fibre in the outlet stream from a washer:

$$C_d = \frac{FF}{TF} \quad [7]$$

6.2.1.3 <u>*KPI of the paper machine dryer and evaporation*</u>

The main KPI for these pieces of equipment is *economy*. The *economy* of the paper machine dryer is defined as steam consumed per evaporated water (Smook, 2002):

$$Eco. = \frac{ST_{DC}}{WE} \quad [8]$$

The *economy* of evaporation represents the mass of evaporated water per mass of steam consumed (Beagle, 1962):

$$Eco. = \frac{WE}{ST_{DC}} \qquad [9]$$

6.2.1.4 *KPIs of the steam plant*

For the boilers, the major KPI to evaluate the energy performance is fuel consumption (GJ/GJ) (CIPEC, 2008):

$$FCB = \frac{BHF}{TEP} \qquad [10]$$

where TEP denotes thermal energy production,

$$TEP = H_{STB} - H_{BFW} \qquad [11]$$

The KPI for energy performance of the deaerator in the steam plant is the percentage of steam consumption (CIPEC, 2008):

$$ST = \frac{STD}{SPB} \times 100 \qquad [12]$$

6.2.1.5 *Reference data for KPIs*

The next step of identification is to extract the reference value for the KPIs from literature. The reference data for thermal energy consumption (TEC) of the digesting, bleaching, and recausticizing departments as well as the fuel consumption of boilers and steam consumption (%) of the deaerator in the steam plant are available in the survey by the Pulp and Paper Research Institute of Canada (Paprican). They collected the performance data of the mills around Canada. In this survey, the k percentile is the values of a distribution with k percentage of the values equal to or below it. For example, the 25th percentile value is equal to or greater than 25 percent of the values of the distribution (CIPEC, 2008).

The reference data for DF and EDR (washer's KPIs) have been presented by Turner et al. (2001). The reference value for the economy of the paper machine dryer and evaporation has been presented in the handbook for P&P technologists (Smook, 2002).

6.2.2 Step 2: Diagnosis

The KPI is calculated and compared with reference values. If the calculated KPI is close to or in the range of the reference values, it means that the department or equipment is operating efficiently. On the other hand, if it is far from the reference values, the probable causes of inefficiency should be identified. There is no on-site examination to perform an actual diagnosis. The identification of probable causes has been done based on the published work and the representative simulation model of the mill. These inefficiencies are sometimes due to poor operating conditions or lack of maintenance and sometimes due to inefficient and old equipment.

6.2.3 Step 3: Performance improvement

Some general and probable projects are proposed to correct the inefficiencies. They are identified based on the published work and also using the simulation model of the mill. The projects include modification of operating conditions, improvement of maintenance or replacement of equipment.

6.2.4 Step 4: Economic analysis

Changes in the operating conditions and improvement of maintenance entail new investment cost and increase the operating cost of the process. The capital cost requirement is calculated based on published work and proportionally adjusted for identified probable remedial projects.

6.2.4.1 Profitability analysis

There are some assumptions that are required for profitability analysis. They have been provided by the mill or taken from the published work:

- The natural gas price is 6.0 \$/GJ. The HHV of natural gas (HHV_{NG}) is 54.7 MJ/kg or 46.25 MJ/m^3.
- The price of fresh water is 0.065 \$/m^3 (Mateos-Espejel et al., 2011c).

- The price for effluent treatment is 0.069 $/m^3.
- Number of operating days is 354 or 8500 hours per year (Browne et al., 2011).

6.3 Results

6.3.1 Digesting department

The digesting department comprises three main pieces of equipment, which use steam and water: the chip bin, steaming vessel, and heaters of the digester (Fig. 6-3).

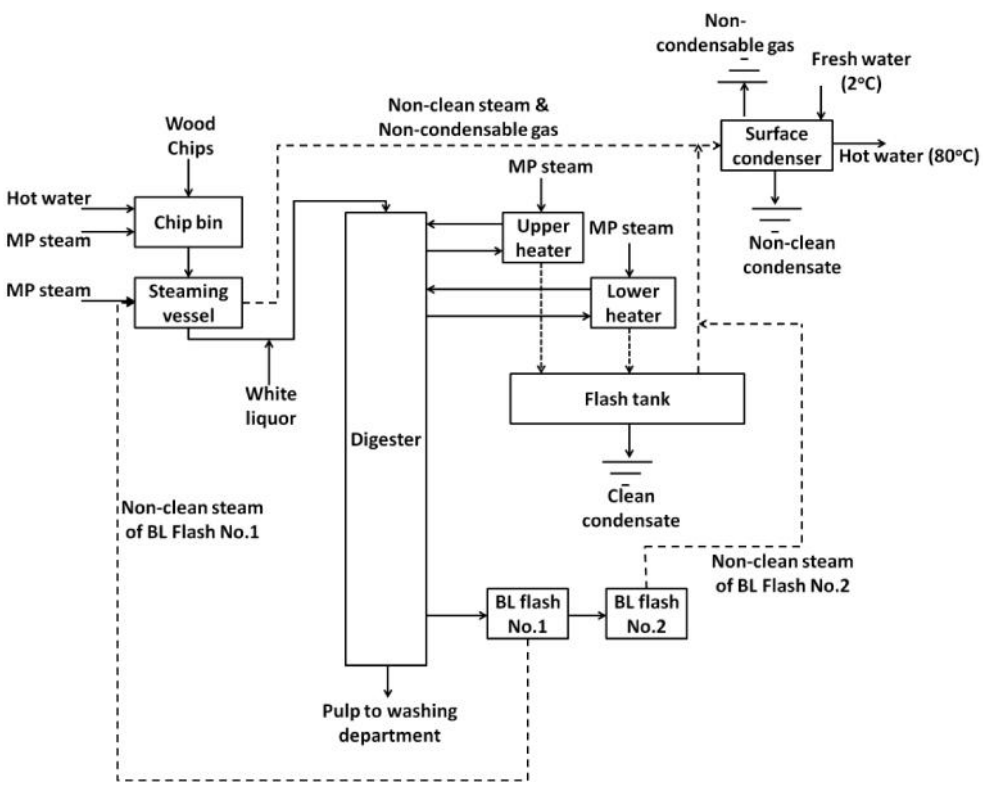

Fig. 6-3 - Schematic of digesting department

At the chip bin, the injection of hot water or filtrate as well as steam at atmospheric pressure is carried out to partially remove air from chips (Smook, 2002) and soften the wood. The chip bin consumes 5.0 m^3/h of hot water at 95°C and 5.4 MW of medium pressure (MP) steam (192°C and 1270 kPa). MP steam and non-clean steam of black liquor flash tank #1 (BL flash No.1) is injected into the steaming vessel to preheat the chips and drive off air and non-condensable gases (Smook, 2002). The steaming vessel consumes 6.1 MW of MP steam. The digester of the mill is a continuous digester. The steam consumption at its upper and lower heaters is 6.0 MW of MP

steam. The output of the digesting step is brown pulp, which is directed to the washing department.

The thermal energy consumption (TEC) is shown in Fig. 6-4 and compared with the reference data. The results show that the TEC of the digesting department is 1.6 times more than the 75th percentile. The probable reason is high heat loss through the equipment of this department due to old (equipment more than 90 years old) or poor insulation and/or a lack of maintenance. In addition, the clean condensate from digester heaters is discharged to the sewer. Therefore, with better insulation and maintenance, improving the recycling of waste heat (Martin et al., 2000) as well as sending back the clean condensate to the condensate tank of the steam plant, the heat loss could be reduced and, consequently, bring the TEC to at least the same value as the 75th percentile. This can result in 5.1 MW of total steam savings, which accounts for 4.6% of the total steam consumption of the mill. The impact of heat loss reduction in the equipment has been assessed using a simulation model. By improving the maintenance of the chip bin and steaming vessel, the steam injection will decrease and, consequently, the quantity of mixture of non-condensable gas and flashed steam from the steaming vessel will be reduced. This would result in a reduction of 6 m^3/h of hot water (80°C) from the surface condenser of digesting. The capital investment to improve the digesting equipment and also piping to return the clean condensate to the steam plant is approximately 0.28 (Martin et al., 2000) and 0.13 M$, respectively. In addition, the operating cost also would roughly increase by 40 k$/a (Martin et al., 2000).

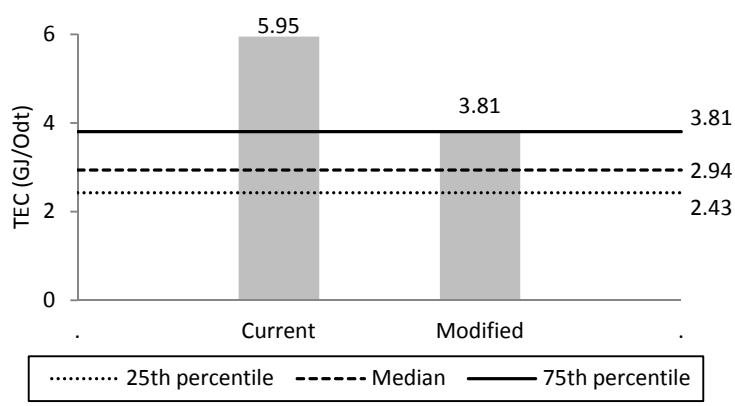

Fig. 6-4 - Thermal energy consumption (TEC) for digesting department

6.3.2 Washing department

The washing department is a major water user and has a direct effect on the steam consumption of the evaporators (Chandra, 1997). This department consists of a deknotter, screener, and five washers (Fig. 6-5). In general, knots are very thick, uncooked chips that exist in the pulp from the digester. They are separated from the pulp in the deknotter before the washers. Oversized particles are also removed in the screener before further washing and sending the pulp to bleaching (Smook, 2002). The direct clean water users of this department are washers while the deknotter and screener receive filtrate from the filtrate tank of the washers.

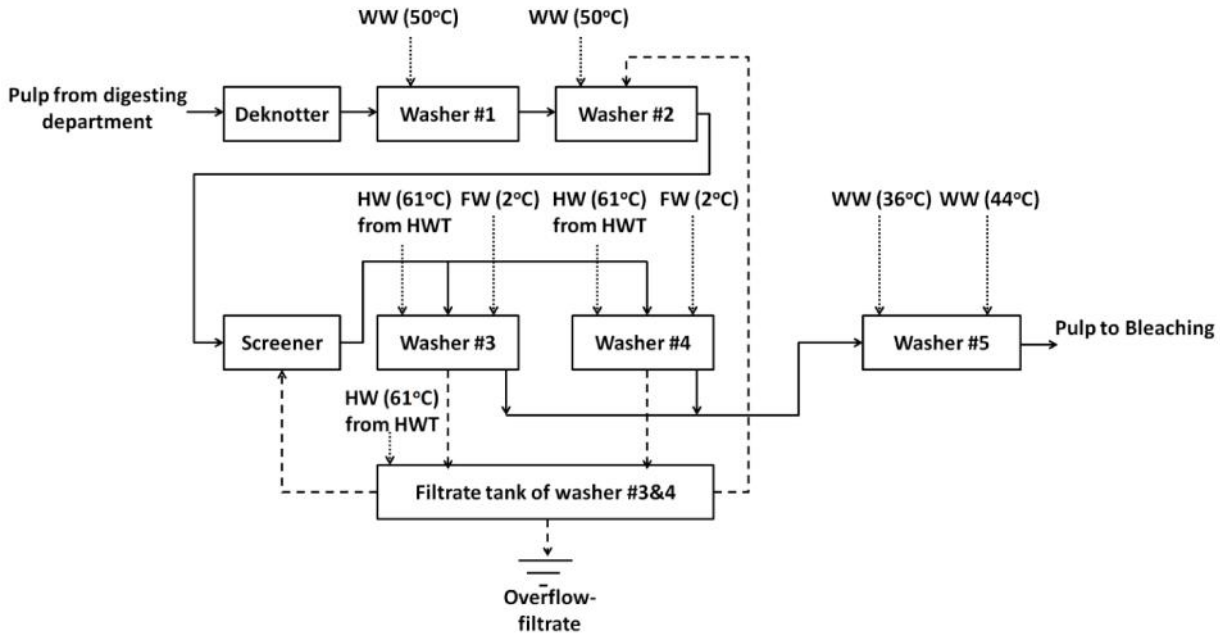

Fig. 6-5 - Schematic of washing department (WW: warm water, FW: fresh water, HW: hot water)

Washers # 1, 2, and 5 are the compact baffle filter (CBF) type while washers #3 and 4 are rotary vacuum drum (RVD). These five washers and filtrate tank of washer #3 and 4 consume 44% of the total warm, hot, and fresh water of the mill (Fig. 6-6).

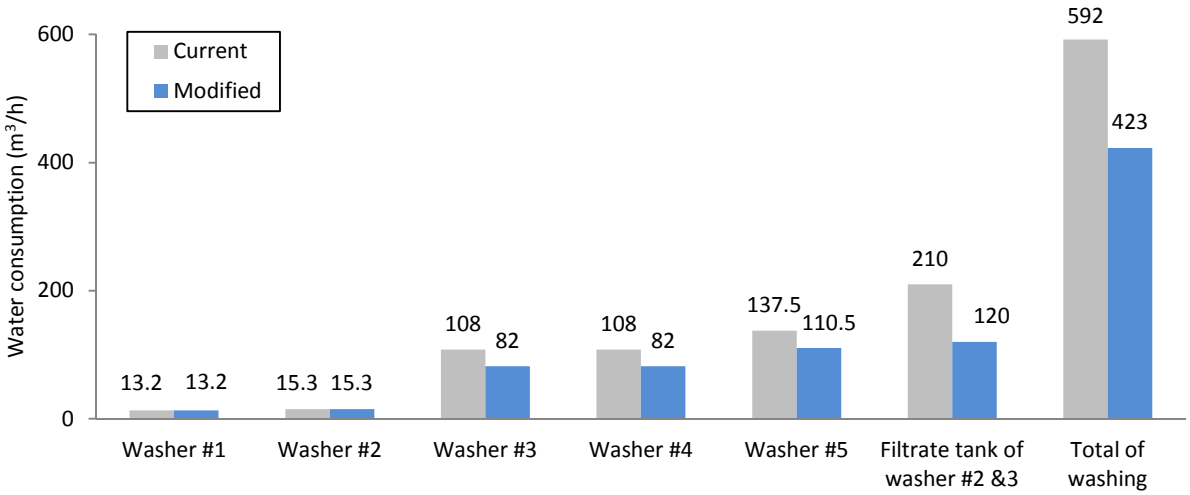

Fig. 6-6 - Water consumption at washing department – current and modified after projects

The calculated DF and EDR for washers and their typical values are illustrated in Fig. 6-7. High DF indicates high water consumption at the washer; however, it results in cleaner pulp. The high EDR shows the high efficiency of washing. Washers # 1 and 2 operate well because the EDR for both washers is acceptable. For washer # 1, this parameter is even higher than the typical high value while for washer # 2, it is within the acceptable range. In addition, DF for these washers is even lower than the typical value and shows that they do not consume too much water. Therefore, there is no modification required for these two washers.

Both washers # 3 and 4 operate similarly; 50% of pulp is directed to # 3 and 50% to # 4 (Fig. 6-5). The DF is high compared to the reference value (Fig. 6-7), which shows the high water consumption at the washers; however, the EDR is bigger than the reference value, which is acceptable. Using the simulation model of the mill, reducing the water consumption is proposed to bring the DF equal to the reference value while the EDR still remains higher than the typical value. Thus, the total water savings for these washers is 52 m^3/h (Fig. 6-6). This water is reduced from fresh water at 2°C that causes the low temperature of the filtrate, which leaves the washers for the filtrate tank of washers # 3 and 4 (Fig. 6-5). The total hot water at 61°C, which requires retaining the temperature of the tank at 38°C, can be decreased from 210 to 120 m^3/h (Fig. 6-6).

From an efficiency point of view, the EDR of washer # 5 is greater than the reference value (Fig. 6-7) and shows efficient washing. However, the DF of this washer is high and consumes a large quantity of water. The DF can be corrected by reducing the warm water (44°C) consumption for

this washer in a simulation model so as to reach the reference value. In this case, the warm water can be saved by 27 m^3/h (Fig. 6-6) and still provide efficient washing (EDR=0.87).

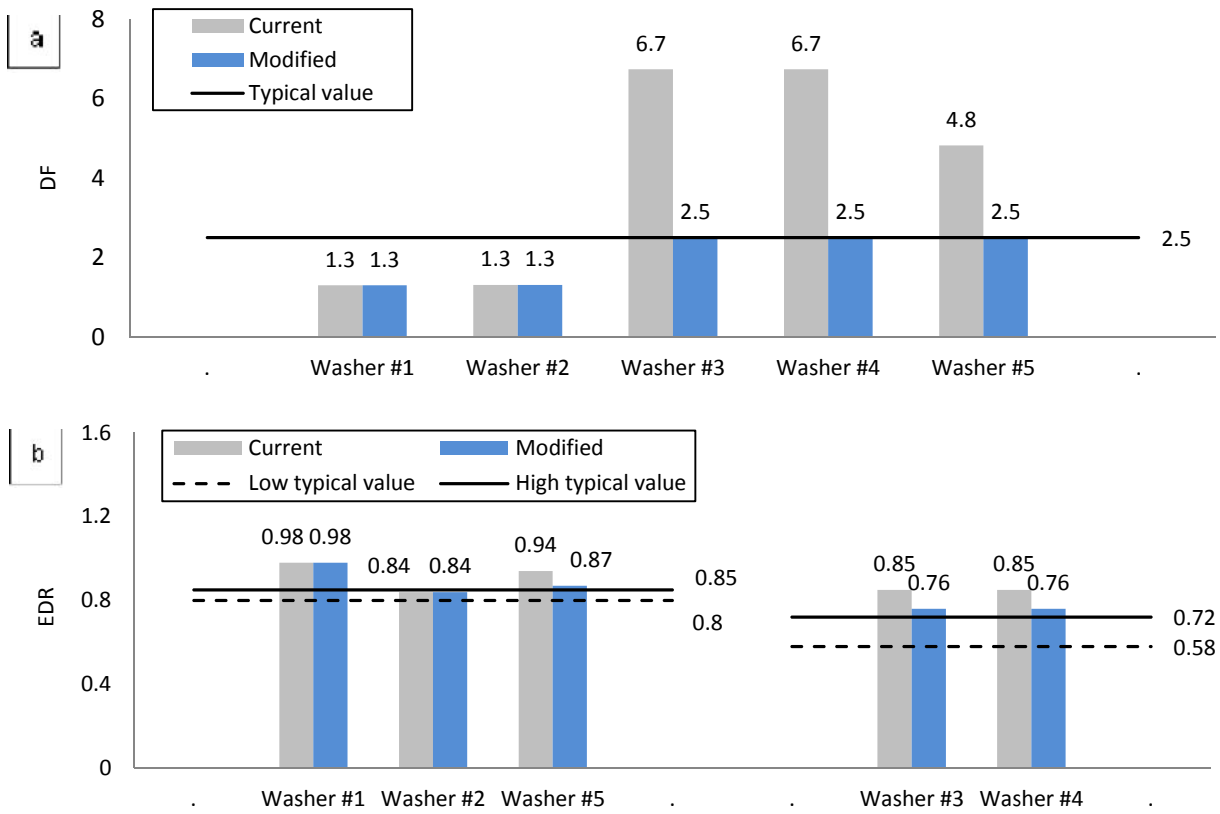

Fig. 6-7 – (a) DF and (b) EDR of washers – current and modified after projects

The total water savings of these projects would be 169 m^3/h, which accounts for 12.5% of the current water consumption of the Kraft mill. Further water savings at the washing department requires the use of process integration.

6.3.3 Bleaching and chemical preparation departments

The bleaching department consists of three stages: D_0, Eop, and D_1. The chemicals, such as ClO_2 and H_2SO_4, are added as bleaching agents at stages D_0 and D_1 while at stage Eop, the main bleaching agents are O_2, H_2O_2, and NaOH. Each stage is composed of one bleaching tower, one storage tower, and one washer (Fig. 6-8). The washers in the bleaching section do not function similar to washers in the washing department. In the washers of the washing department, water

plays the main role for cleaning the pulp while at the washers of the bleaching stages; both chemicals and water play this cleaning role. Therefore, the washer of bleaching stages cannot be evaluated like the washers of the washing department. In the bleaching department, the energy and water performance of the whole system should be taken into account.

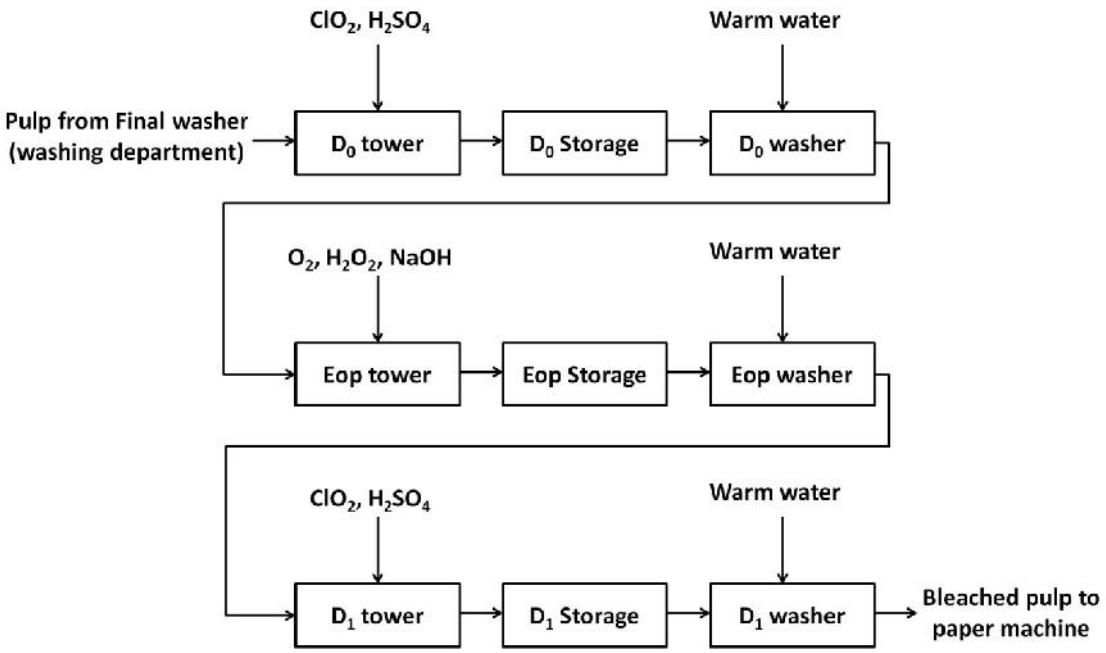

Fig. 6-8 - Schematic of bleaching sequences

Figure 6-9 demonstrates the summary of thermal energy and water consumptions of the bleaching and chemical preparation departments. The steam consumption is 11.7 MW, which corresponds to 3.51 GJ/Odt of thermal energy consumption. This number is close to the median Canadian one, so it can be concluded that the bleaching and chemical preparation perform well from the energy perspective. The water consumption is 24.4 m^3/Adt (332 m^3/h), which is below the water consumption of the average mills designed in the 1980s, thus, these departments are water efficient, too.

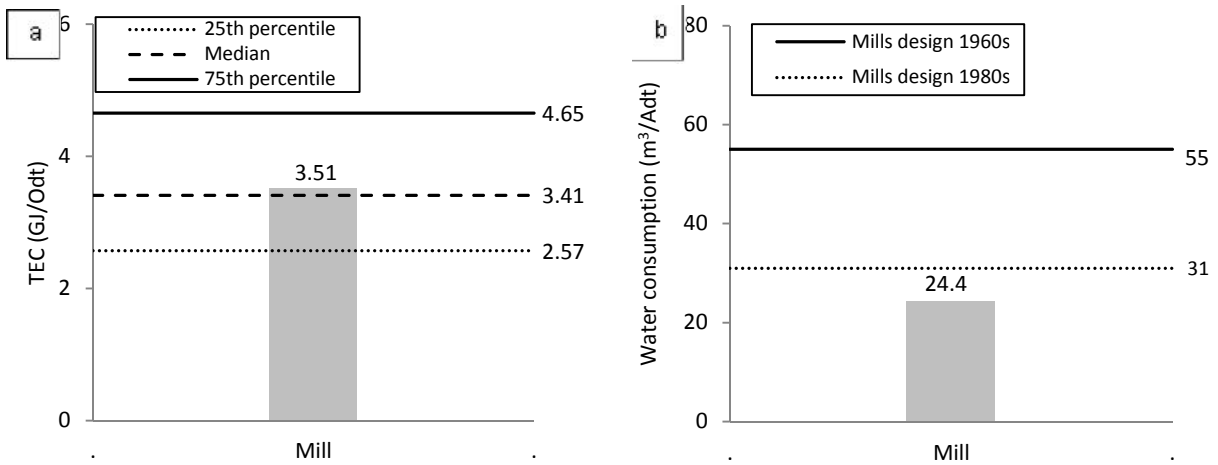

Fig. 6-9 – (a) Thermal energy (TEC) and (b) water consumption of bleaching and chemical preparation department

6.3.4 Paper machine department

The paper machine consumes 45.1 MW (5.15 GJ/Odt) of steam to pre-heat air, to warm up white water at the silo chest, and to dry paper (Fig. 6-10). This accounts for 40% of total steam consumption of the mill. The dryer by itself consumes 24.0 MW of this steam accounting for 22% of steam consumption of the mill. The calculated *economy* for the dryer is 1.1 ton of steam consumed per ton of water evaporated. This number is smaller than the typical *economy* which is 1.3 t/t (Smook, 2002), so the paper machine dryer is energetically efficient.

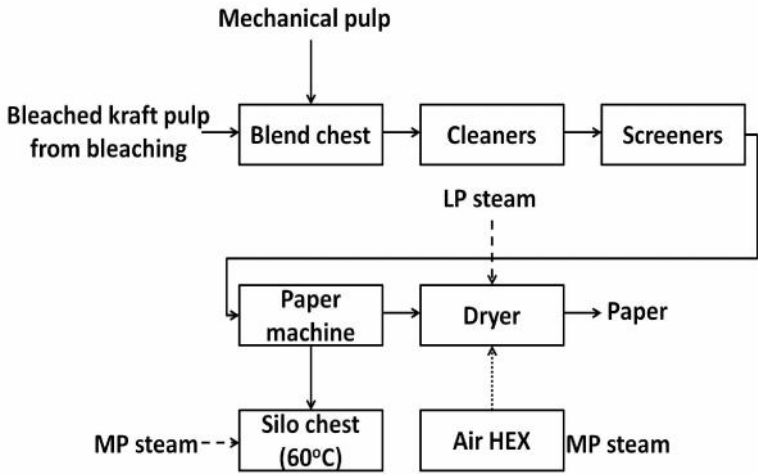

Fig. 6-10 - Schematic of paper machine

6.3.5 Evaporation department

The first department of the recovery loop is evaporation. The mill has a six-effect evaporator, which concentrates weak black liquor from 19 to 50% of dissolved solids (Fig. 6-11). The 50% dissolved solids black liquor, strong black liquor, is concentrated further in the cascade concentrator up to 71.5% using heat from the stack gas and then directed towards the recovery boiler (Fig. 6-12).

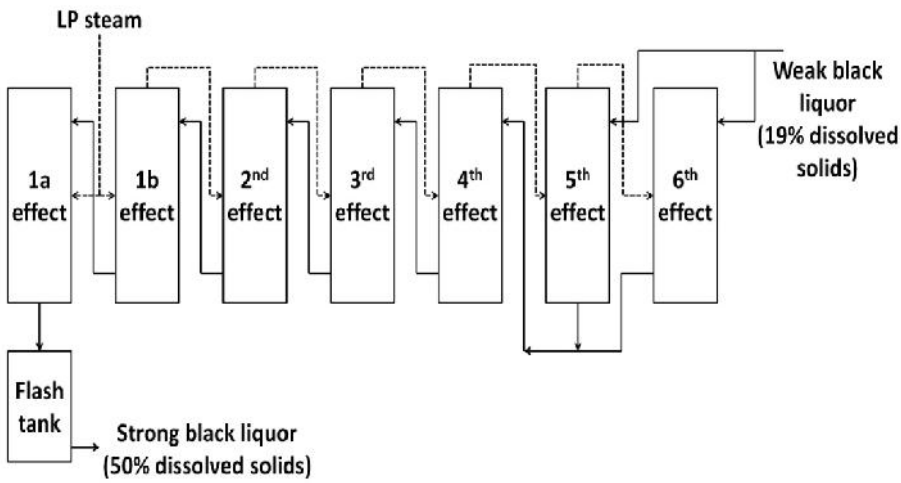

Fig. 6-11 - Schematic of six-effect evaporator

The calculated *economy* for all evaporation effects is 5.75 tons of evaporated water per steam consumed and it is larger than the typical *economy* (5.5 t/t). Thus, it can be concluded that the evaporation train operates well and has reasonable energy consumption.

6.3.6 Steam plant

The steam plant is the key area where enough energy is produced to operate the mill. It comprises one recovery boiler (RB), one bark power boiler (PB #1), and three natural gas power boilers (PB # 2, 3 & 6) during winter conditions. The reason for the utilization of four power boilers is that the Kraft pulp only accounts for 40% of total produced paper, so there is not enough black liquor generated from the Kraft process for burning at the recovery boiler. Thus, it cannot cope with the steam requirement of the mill and, in particular, the paper machine in which both Kraft and mechanical pulps are blended and which consumes 45.1 MW of steam.

6.3.6.1 Boilers

The recovery boiler (RB) evaporates water from the black liquor prior to burning. This involves passing hot stack gas from the boiler over the black liquor to drive off the water, so the black liquor is concentrated enough to burn efficiently (Fig. 6-12) (AbitibiBOWATER). The RB receives 34 t/h (813 t/d) of black liquor with 71.5% of total dissolved solids concentration and 96 t/h of air at 169°C. It produces 40.1 MW of MP steam, and 122 t/h of stack gas at high temperature (478°C), which passes through the cascade concentrator to concentrate the black liquor and produce warm water at 50°C at the scrubber (Fig. 6-12).

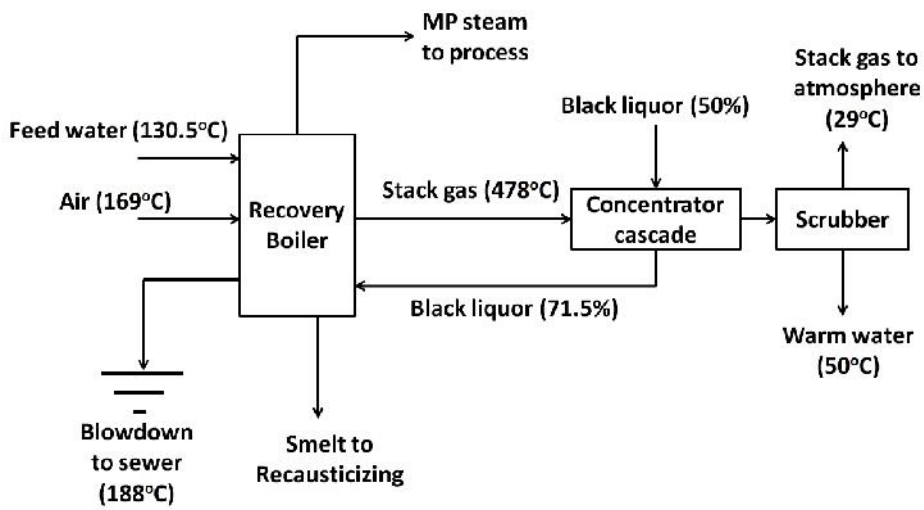

Fig. 6-12 – Schematic of recovery boiler, concentrator cascade, and scrubber

The flowrate of the fuel, air and stack gas temperatures, steam production, and calculated fuel consumption for the boilers, including RB, are displayed in Fig. 6-13. The temperature of the inlet air is an important factor for the efficiency of the boilers, the higher the inlet air temperature, the higher the boiler efficiency. At all boilers of the mill, this temperature is high enough and is in the range of 169-210°C. The fuel consumption of the recovery boiler is significantly higher than the 75th percentile of Canadian mills. This shows that the quantity of steam produced in the RB is too low. The probable causes could be high heat loss through the envelope of the recovery boiler by convection and radiation, incomplete fuel burning, irregular monitoring of the steam traps, or steam leakage via the pipes (Martin et al., 2000). In addition, in

the absence of good maintenance, the burners could probably be worn out or require adjustments (Martin et al., 2000). The probable solutions could be to optimize the lubrication of the bearings to reduce heat loss and wear and tear, improve maintenance and insulation of the boiler, repair steam leakage, and monitor the steam traps, which can prevent venting significant amounts of steam. Furthermore, the stack gas can be monitored to analyse the composition to ensure complete fuel burning. By implementing these probable solutions, the fuel consumption can be at least equal to the 75th percentile (2.13 GJ/GJ). Since the total received black liquor to the recovery boiler is not altered, the steam production can be raised from 40.1 to 57.0 MW. The total capital investment cost is approximately 0.4 M$ while the operating cost will increase about 17 k$/a (Martin et al., 2000).

The fuel consumption of PB # 1 and # 2 is greater than the 75th percentile (Fig. 6-13e). The probable reason for this high fuel consumption could be similar to the case of the recovery boiler. Thus, perhaps by applying the same improvements as for the RB, at least a fuel consumption of the 75th percentile could be achieved. These improvements could lead to an increase in steam production from 15.8 to 16.9 MW and 15.0 to 18.7 for PB # 1 and PB # 2, respectively. They entail approximate investment costs of 0.06 and 0.09 M$ for PB #1 and #2, respectively while the increase in their operating cost would be roughly 3 and 4 k$/a, respectively (Martin et al., 2000). The fuel consumption of PB # 3 and # 6 is close to the Canadian median (Fig. 6-13e). Therefore, it can be concluded that these two boilers operate well.

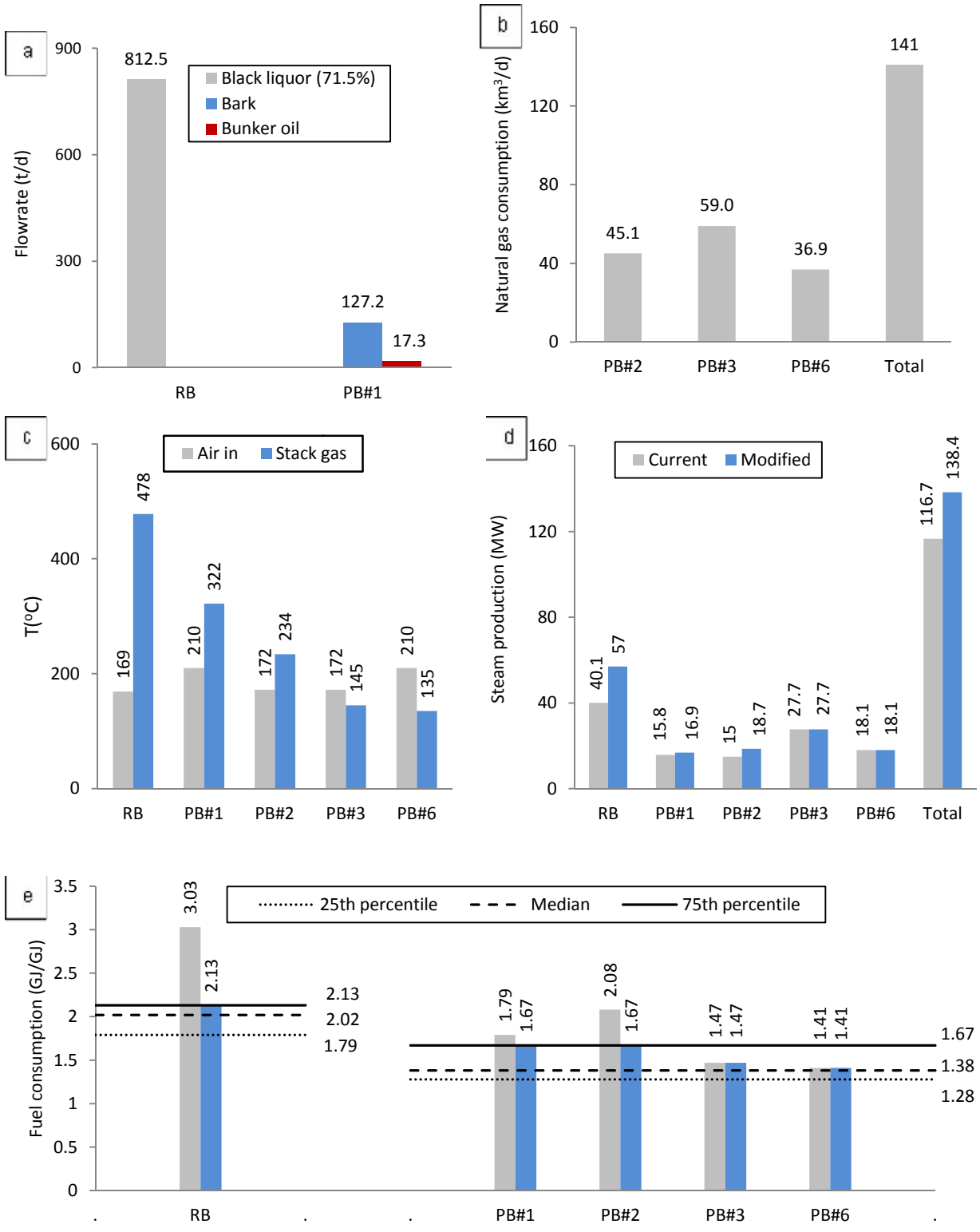

Fig. 6-13 – (a) & (b) Flowrate of fuel, (c) temperature of air and stack gas, (d) steam production, and (e) fuel consumption (KPI) of the boilers

6.3.6.2 Deaerator

The most energy intensive area in the steam plant is the deaerator, which is employed to pre-heat the water for the boilers up to 130.5°C and remove air from the water (Fig. 6-14).

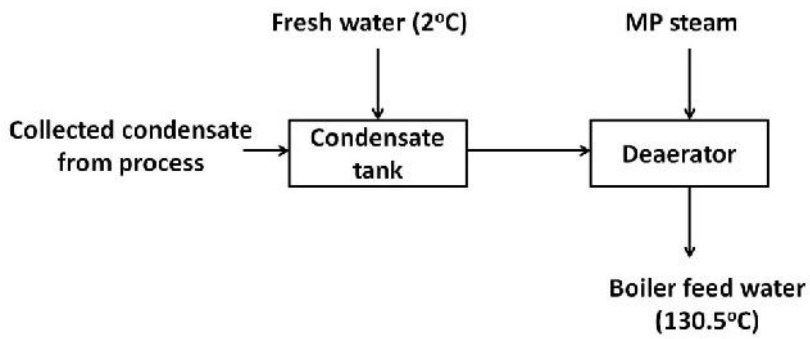

Fig. 6-14 - Simple schematic of deaerator

The water and steam consumption (MW) and calculated steam consumption (%) of the deaerator are presented in Fig. 6-15 (a-c). The deaerator consumes 15.0 % of total steam production of the mill (Fig. 6-15c). This load can be diminished by flashing the boilers' blowdown water (BLF) and injecting 2.9 MW produced low pressure (LP) steam to the deaerator (Fig. 6-15d) (EPA, 2010). The capital investment cost and operating cost to install the new flash tank are 0.33 M$ and 110 k$/a, respectively (Martin et al., 2000).

Applying the aforementioned projects to the boilers increases the total requirement of feed water to the deaerator. Thus, the fresh water to the condensate tank increases from 83 to 109 m^3/h (Fig. 6-15a) and the net steam consumption at the deaerator rises from 17.6 to 19.5 MW. However, the steam consumption (%) at the deaerator decreases to 14.1% due to LP steam from the blowdown flash tank. Further steam reduction at the deaerator requires substituting hot or warm water to condensate tank for fresh water (Fig. 6-14). The saved hot water (84 m^3/h) at 61°C and 7 m^3/h of saved warm water (44°C) from the washing department projects as well as 8 m^3/h of returned condensate from the digesting department can be substituted for fresh water at the condensate tank (Fig. 6-14). This decreases the demand for fresh water consumption at the condensate tank from 109 to 10 m^3/h and increases the temperature of the condensate tank from 42 to 66°C. Thus, the steam consumption at the deaerator drops from 19.5 to 13.2 MW through which 5.7% of total current steam consumption of the mill is saved. The total piping cost to transfer the warm and hot waters from warm and hot water tanks to the condensate tank is 0.26 M$. By applying these two

projects to the deaerator, the steam consumption is reduced to 9.4%, which stands between the median and the 75th percentile.

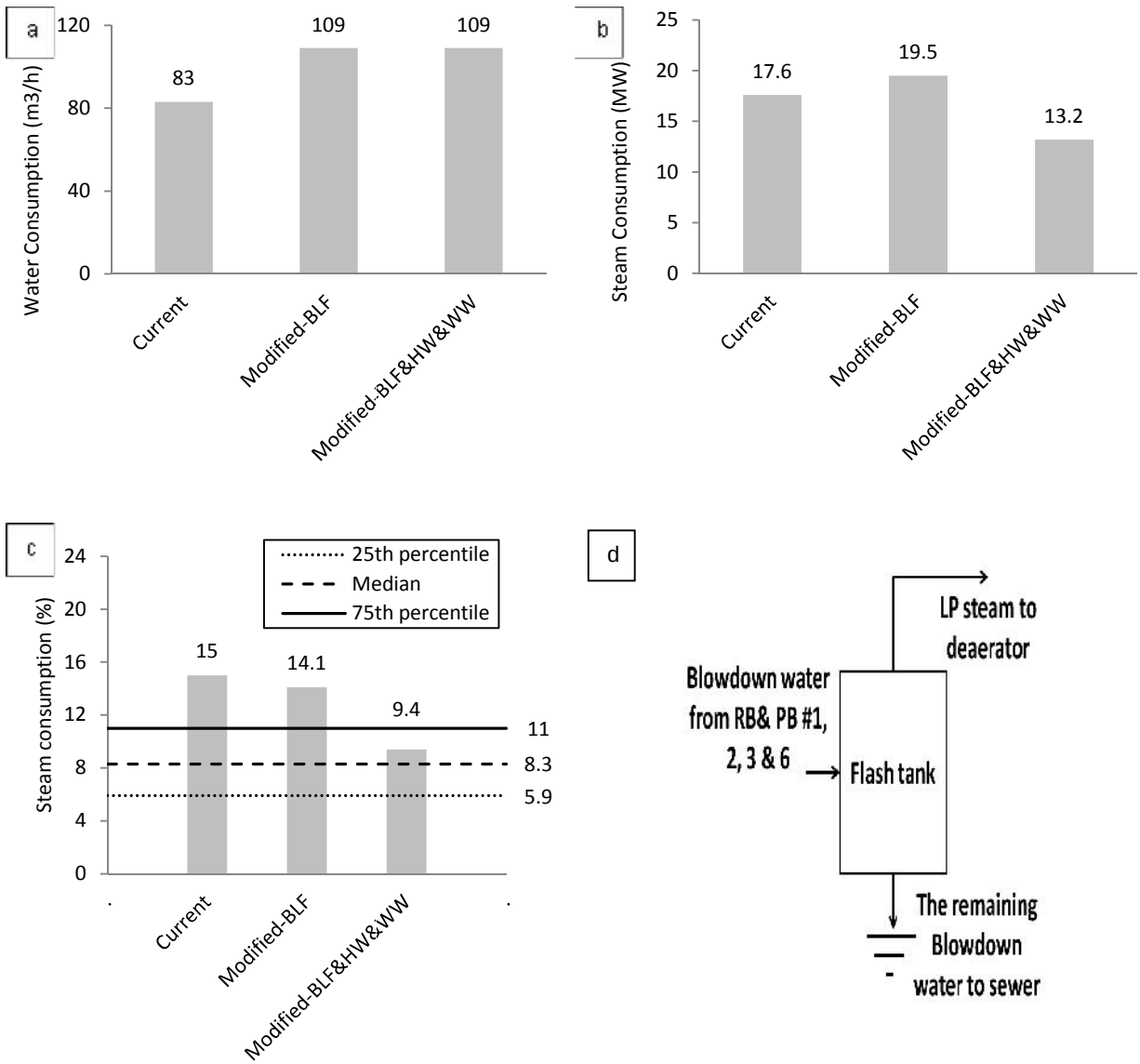

Fig. 6-15 – (a) Water consumption (m^3/h), (b) steam consumption (MW), and (c) steam consumption (%) of deaerator (d) flash of blowdown (BLF)

6.3.7 Recausticizing department

The thermal energy consumption of recausticizing stands between the median and the 75th percentile of Canadian mills (Fig. 6-16). This steam consumption is acceptable; however, it can be completely eliminated using the following strategy.

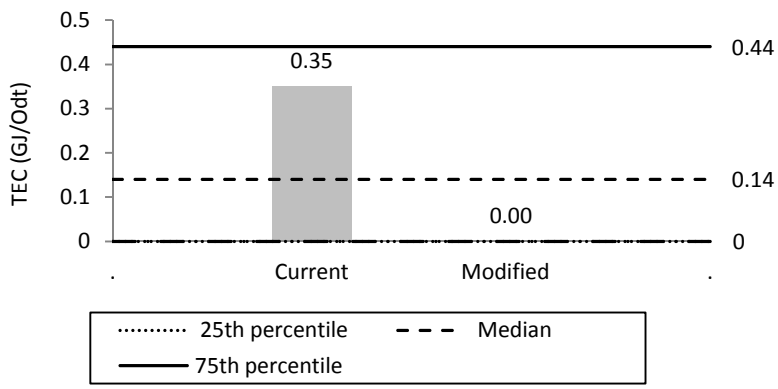

Fig. 6-16 - Thermal energy consumption (TEC) of recausticizing department

Green liquor is heated from 69°C to 84°C by a steam heater before being sent to the slaker (Fig. 6-17). The low temperature of the green liquor from the green liquor tank (69°C) is due to controlling the density of raw green liquor at the smelt tank (Frederick et al., 2011) using weak wash water at low temperature (22°C). Thus, the flowrate of raw green liquor towards the green liquor clarifier is 1278 t/d with 18% dissolved solids. The reason for the low temperature of the weak wash water is that fresh water (2°C) is used to control the level of the weak wash tank. Hence, the temperature of the smelt tank is lowered to 75°C. To eliminate steam consumption at the green liquor heater, four parameters become important: the temperature of the water to the weak wash tank, the temperature of the smelt tank, the flowrate of the weak wash water to the smelt tank, and the temperature of the green liquor to the slaker. The flowrate of weak wash water and the temperature of green liquor to the slaker should be maintained at the same numbers as they are right now. So, the parameters, which can be regulated to reach these two numbers, are the temperature of water to the weak wash tank and, subsequently, the temperature of raw green liquor at the smelt tank. After performing the sensitivity analysis in the simulation model, the temperature of the water to the weak wash tank was determined to be 39°C to maintain the conditions, but since the available warm water at the mill is 44°C, this water was chosen to

replace the fresh water. Therefore, the temperature of weak wash water to the smelt tank rises from 22 to 42°C. Subsequently, the temperature of the smelt tank goes up from 75 to 92°C. The temperature of green liquor to slaker becomes 86°C, which is still below the boiling point of green liquor (100-104°C) (Sanchez, 2007), so it is acceptable. The steam savings of this project is 1.0 MW. The project entails an investment of 0.11 M$ for piping to transfer the warm water from the warm water tank to the weak wash tank.

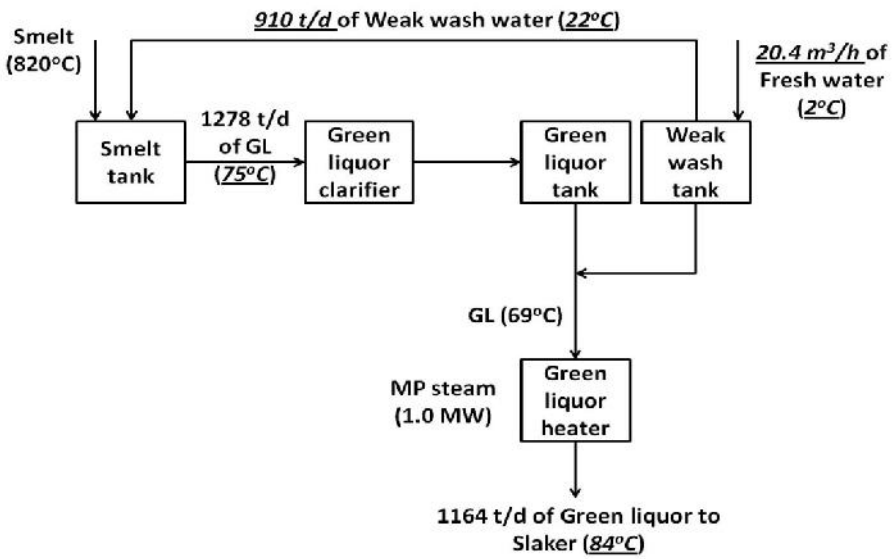

Fig. 6-17 - Simple schematic of green liquor preparation at recausticizing

6.3.8 Synthesis of the Performance Improvement Projects

There are nine performance improvement projects: one at the digesting department, two at the washing department, five at the steam plant (three for the boilers and two for the deaerator), and one at the recausticizing department. The synthesis of all projects has been summarized in Table 6-1.

Table 6-1 – Summary of the performance improvement projects

#	Project name	Probable remedial solution	Consequence of project on the process	Saving / increase*	
				Steam (MW)	Water (m^3/h)
1	Digesting department	Reduce the heat loss by improving the maintenance	-Reduction of steam consumption	+5.1*	-
			-Reduction of hot water (80°C) production at surface condenser	-	-6*
		Return the clean condensate to steam plant	-Reduction of water consumption at deaerator	-	+8
2	Washers #3 & 4	Reduce the DF	-Reduction of fresh water consumption	-	+52
			-Reduction of hot water (61°C) consumption at filtrate tank of washers # 3 & 4	-	+90
			-Increase the quantity of black liquor to recovery boiler from 813 to 817 t/d and increase steam production at RB	+1.6	-
3	Washer # 5	Reduce the DF	-Reduction of warm water consumption	-	+27
4	Recovery boiler	Reduce the heat loss by improving the maintenance	-Increase steam production	+16.9	-
			-Increase fresh water consumption at deaerator	-	-20
			-Increase steam consumption at deaerator	-3.7	-
5	Power boiler #1	Reduce the heat loss by improving the maintenance	-Increase steam production	+1.1	-
			-Increase fresh water consumption at deaerator	-	-1
			-Increase steam consumption at deaerator	-0.2	-
6	Power boiler #2	Reduce the heat loss by improving the maintenance	-Increase steam production	+3.7	-
			-Increase fresh water consumption at deaerator	-	-5
			-Increase steam consumption at deaerator	-0.9	-
7	Deaerator	Flash blowdown and inject the produced steam to deaerator	-Reduction of steam consumption at deaerator	+2.9	-
8	Deaerator	Replace fresh water to the deaerator with saved hot and warm water of projects #2 and #3 and clean condensate of project #1	-Reduction of steam consumption at deaerator	+6.3	-
9	Recausticizing department	Replace the fresh water with saved warm water of project #3	-Elimination of steam consumption at green liquor heater	+1.0	-
	Total			+33.8	+145

*Plus (+) means an increase in steam generation at the boiler, also steam and water savings; minus (-) means an increase in steam or water consumption at deaerator

Applying all projects together affects all the results. For example, the project of washers # 3 and 4 (Project #2) increases the quantity of black liquor to the recovery boiler from 813 to 817 t/d, so the steam production at the RB increases by 1.6 MW. The digesting department project (Project

#1) reduces the total hot water production at the surface condenser by 6 m^3/h (Fig. 6-3). Thus, the liberated hot water (61°C) from project # 2, which can be sent to the condensate tank is reduced from 90 to 84 m^3/h (Fig. 6-14). The saved warm water at 44°C from the project of washer # 5 is 27 m^3/h. A portion of this water (20 m^3/h) was proposed to be sent to the weak wash tank of recausticizing. The remainder (7 m^3/h) was proposed to be used at the condensate tank of the steam plant.

The sum of all the projects is presented in Fig. 6-18. The total increase in steam production at the boiler (23.3 MW) and the steam savings in the process (10.5 MW) form the excess steam. Therefore, the total excess steam is 33.8 MW, which corresponds to 30% of the current steam consumption at the mill. In addition, the saved fresh water and the reduced effluent are 145 m^3/h (11.9 m^3/Adt) and 125 m^3/h (10.6 m^3/Adt), respectively. These values correspond to 11% of current water consumption and 7% of total effluent production.

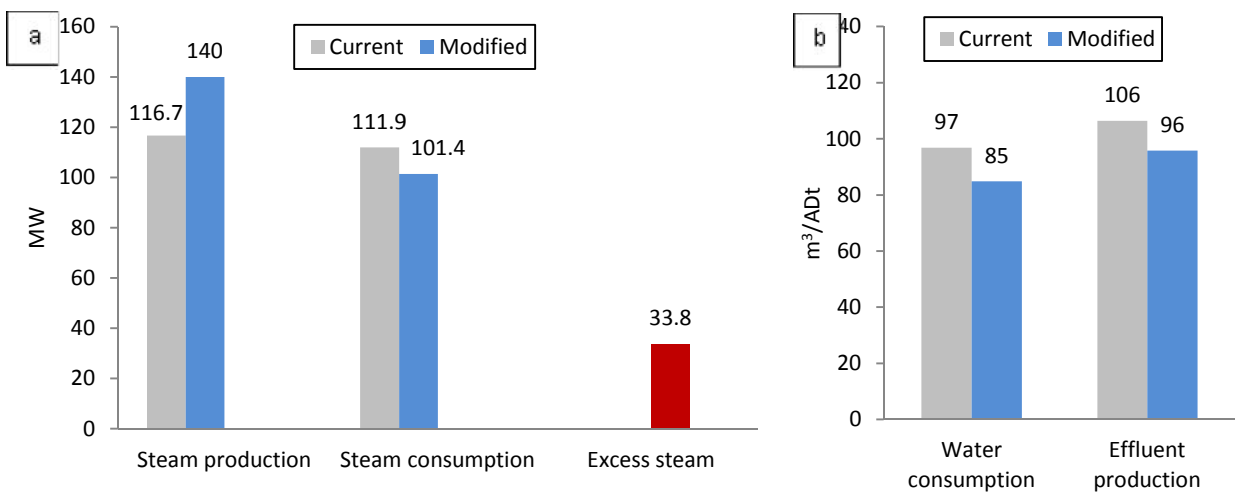

Fig. 6-18 - Summary of all performance improvement projects, effect on (a) steam production, consumption, and excess steam and (b) water consumption and effluent production

6.3.9 Economic Analysis

Table 6-2 summarizes the total capital investment and operating costs related to each project and the aggregation of them.

Table 6-2 – Summary of capital investment and operating costs of the performance improvement projects

Project #	Project name	Capital investment cost (M$)	Operating cost (k$/a)
1	Digesting department	0.41	40
4	Recovery boiler	0.40	17
5	Power boiler #1	0.06	3
6	Power boiler #2	0.09	4
7	Deaerator - Flash blowdown waster	0.33	110
8	Deaerator - HW& WW consumption	0.26	-
9	Recausticizing	0.11	-
	Total	***1.66***	***174***

The excess steam of 33.8 MW can be used to diminish the total fossil fuel at the natural gas power boilers. The PB #2 can be completely shut down (18.7 MW) and the steam generation at PB #3 can be reduced by 15.1 MW. This causes a reduction in the steam consumption at the deaerator by 5.8 MW, which can be used to again reduce the steam generation at PB #3. Thus, the total reduction of steam generation would be 39.6 MW (Fig. 6-19a). This results in the total natural gas savings of 89.2 km^3/d (Fig. 6-19b). The water consumption of the deaerator also decreases by 46 m^3/h (3.4 m^3/Adt).

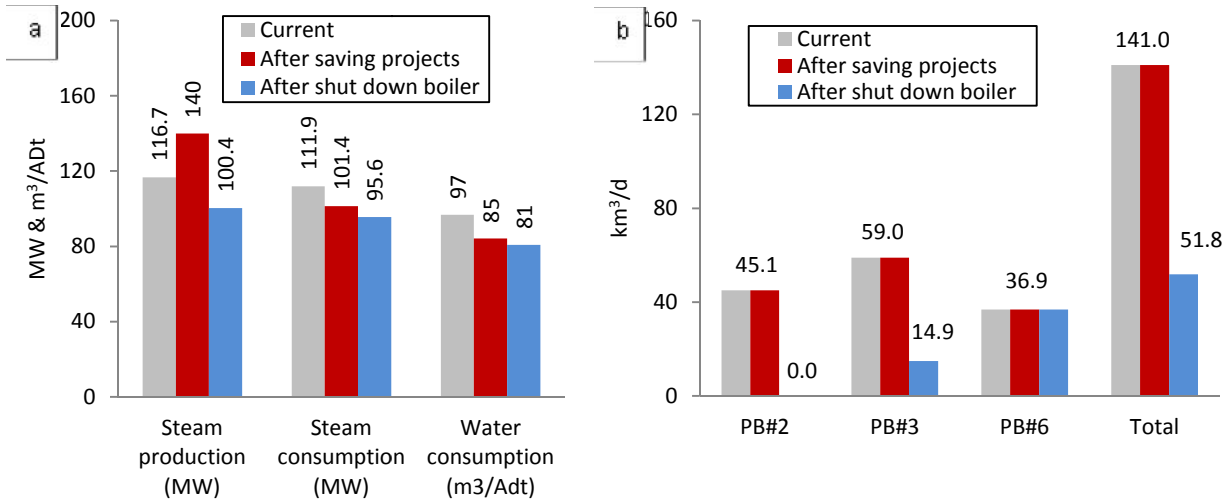

Fig. 6-19 - Summary: shutting down the boilers, effect on (a) steam production and consumption, water consumption and (b) natural gas consumption

The economic results of the total projects after the reduction of natural gas consumption at the power boilers are presented in Table 6-3. The results show that the payback period would be less than 3 months and net profit is 8.8 M$/a. Natural gas (NG) savings of 89.2 km^3/d is the equivalent of a 1.3 kt/a reduction in CO_2 emissions, which is environmentally advantageous.

Table 6-3 - Economic analysis of process improvement projects at Kraft mill after the reduction of natural gas consumption

Effluent reduction (m^3/h)	Water savings (m^3/h)	Excess steam (MW)	NG savings (km^3/d)	Effluent reduction (M$/a)	Water savings (M$/a)	NG savings (M$/a)	Increase in operating cost (M$/a)	Net profit (M$/a)	capital cost (M$)	Payback period (a)
125 (7%)	183 (14%)	39.6 (35%)	89.2	0.1	0.1	8.8	0.2	8.8	1.7	0.2

6.4 Conclusion

The methodology to analyze and diagnose the performance of the equipment and departments has been developed as a systematic approach to quickly identify the steam and water saving potentials. The KPIs related to energy and water efficiency have been determined for the main equipment and departments. The reference data for KPIs has been extracted from the literature to be compared with the calculated KPIs of the process. The method identifies preliminary probable causes of inefficiencies and suggests some probable remedial projects to correct them. This study can be a starting point for further in-depth and on-site analysis of poor performance equipment to improve their efficiency.

The method has been applied on an Eastern Canadian mill. Some departments and equipment in the mill performed well, such as washers #1and 2 in the washing department, bleaching and chemical preparation departments, the dryer of the paper machine, the evaporation department, PB #3 and #6 of the steam plant, and recausticizing. The digesting department and some of the equipment, such as washers # 3, 4, and 5 of the washing department, RB, PB #1, PB #2, and the deaerator of the steam plant could be improved. Nine performance improvement projects have been proposed to correct the inefficiencies. This could result in an increase of steam generation at the boilers by 23.3 MW and a savings of 10.5 MW of steam at the digesting department (5.1 MW), the deaerator of the steam plant (4.4 MW), and the recausticzing department (1.0 MW), so the total excess steam would be 33.8 MW, which is 30% of current steam consumption of the

mill. In addition, the total water saving and effluent reduction are 145 m^3/h (11.9 m^3/Adt) and 125 m^3/h (10.6 m^3/Adt), respectively.

The total capital investment cost for the performance improvement projects is approximately 1.7 M$. The operating costs also would increase by 0.2 M$/a. The net profit is significant and as high as 8.8 M$/a and the payback period is as short as 0.2a. The natural gas savings at the boilers results in a1.3 kt/a CO_2 emission reduction.

Further steam and water savings can be achieved by carrying out process integration.

7CHAPTER 7: RETROFIT HEX NETWORK DESIGN TECHNIQUE

The objective of this chapter is to address all challenges and potentials that have been presented in section 3.3.4 of literature review by developing a new technique for the retrofit HEN design of the water-based process. The remainder of this chapter is organized as follows:

- The technique that is called "retrofit HEN design (R-HEN) of the water-based process" is presented and the steps are elaborated. Mill C is also used to show different aspects of the methodology.
- The results of applying the method on the mill C are shown.
- Pinch Analysis is performed for the mill C.
- The approach and also results of R-HEN and Pinch Analysis are compared to show the advantages of the new technique.

7.1 Retrofit HEX Network Design (R-HEN)

The Retrofit HEX network design (R-HEN) is illustrated in Fig. 7-1 and encompasses four successive steps. In the first two steps, the constraints that are envisaged to change in the current conditions and design are analyzed and targeting to estimate final steam saving then carried out. The guidelines for the preparation of required data for the HEN design are presented. The potential for heat recovery from the waste stream is evaluated. The existing heat exchangers are characterized in order to be effectively reused in the new HEN. In step 3, a new algorithm is developed to design the HEX network. In step 4, the economic aspects of the new design are calculated to illustrate the economic advantages of this new technique. Each step is elaborated in the following sections.

It should be noted that different steps of the technique are supported by limited data and examples of the application (Kraft process).

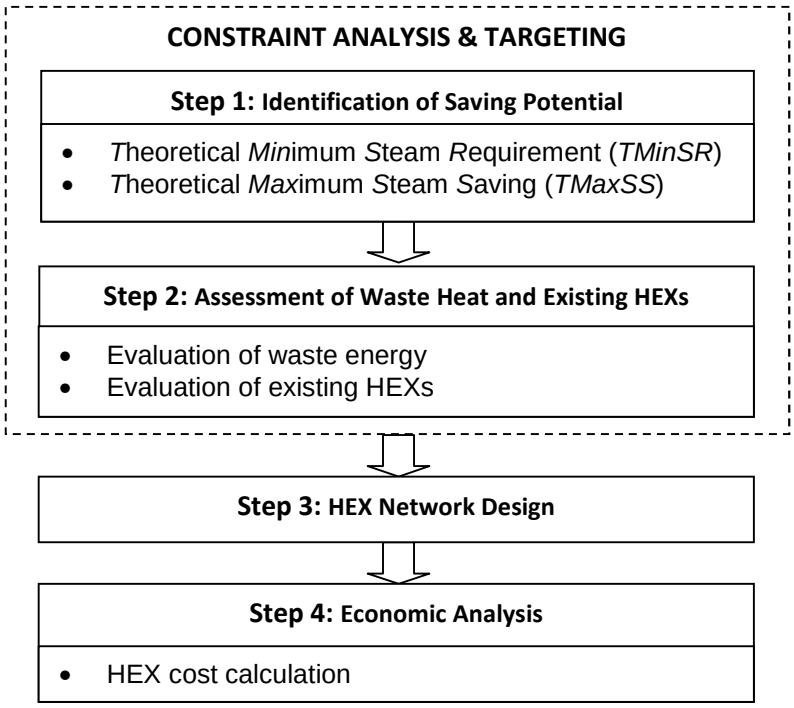

Fig. 7-1 – Retrofit HEX network design (R-HEN) of the water-based process

7.1.1 Step 1: Identification of saving potential

This step as illustrated in Fig. 7-2 consists of three phases: process steam users' constraint, interaction in the process energy system, and air inlet constraint. To conduct these phases, the representative simulation of the process is needed to incorporate the possible modifications. In phase 1, the steam users are categorized to determine at which points steam can be eliminated or reduced and where it cannot be reduced or replaced with other heat sources. In phase 2, the saving potential at steam injection points is assessed. In phase 3, the potential to enhance the thermal efficiency of boilers or reduce the steam consumption of air users (e.g., dryers of Kraft mill) is evaluated.

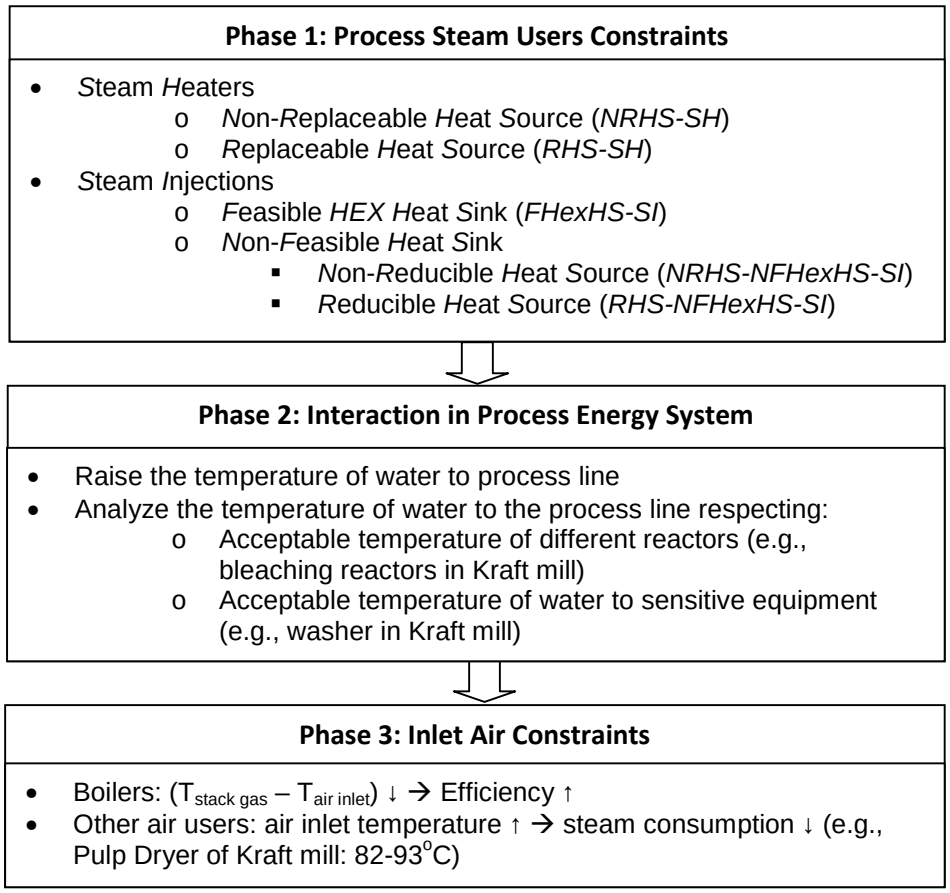

Fig. 7-2 – Step 1: Identification of saving potential

7.1.1.1 Phase 1: Process steam users' constraint

The analysis of the steam users' constraints is carried out to determine how to reduce or eliminate steam consumption at different steam user points. Two types of steam users in the water-based process as shown in Fig. 7-2 can be identified: steam heaters (SH) and steam injection (SI) points. The steam heaters (SH) are divided into two categories: non-replaceable heat source (NRHS-SH) and replaceable heat source (RHS-SH). Steam injection (SI) points are also divided into two categories: feasible HEX heat sink (FHexHS-SI) and non-feasible HEX heat sink (NFHexHS-SI). The latter one is classified into two subcategories: non-reducible heat source (NRHS-NFHexHS-SI), and reducible heat source (RHS-NFHexHS-SI).

Figure 7-3 demonstrates the differences between these five categories using five different examples:

- Non-replaceable heat source-steam heater (NRHS-SH): The upper heater of the continuous digester in Kraft pulping is positioned in the digesting department (Fig. 7-3a) and used to supply heat for cooking wood chips. The digester is the core of the pulping process and maintaining the conditions of it, is crucial; therefore, the heat source (steam) to heat up the liquor for the digester at the upper heater cannot be replaced with another heat source in the process. This heat sink (cooking liquor) is not required to be included in the data sheet for the HEN design.
- Replaceable heat source-steam heater (RHS-SH): The heat source (steam) for hot water production from warm water can potentially be replaced with other heat sources available in the process (Fig. 7-3b). The warm water (heat sink) is only represented in the data sheet for the HEN design as shown in Fig. 7-3b.
- Feasible HEX heat sink-steam injection (FHexHS-SI): Figure 7-3c shows the hot water tank where the steam is injected to raise the temperature of warm water and produce hot water. Herein, warm water is regarded as a heat sink that needs to be heated up and the steam is the heat source to supply the heat to attain the higher temperature. Warm water (heat sink) can be directed to the heat exchanger; thus, it is a feasible HEX heat sink (FHexHS-SI). In addition, the other available heat sources other than steam can be employed to produce hot water. The warm water (heat sink) is only represented in the data sheet for the HEN design as illustrated in Fig. 7-3c.
- Non-reducible heat source, non-feasible HEX heat sink, steam injection (NRHS-NFHexHS-SI): Figure 7-3d illustrates the chip bin of the digesting department in Kraft pulping. At the chip bin (Fig. 7-3d), steam is injected to partially remove air from chips (Smook, 2002) and soften the wood. The heat sink is wood chips and the solid wood cannot be introduced to the HEX, so it is a non-feasible HEX heat sink. In addition, the steam (heat source) must be injected into the chip bin and there is no possibility for steam reduction using the HEX network; it is a non-reducible heat source. The heat sink (wood chips) is not required to be included in the data sheet for the HEN design.
- Reducible heat source, non-feasible HEX heat sink, steam injection (RHS-NFHexHS-SI): In the deaerator of boiler house (Fig. 7-3e), the water (heat sink) cannot be directed to the HEX because steam is used to remove the air, so it is a non-feasible HEX heat sink. On the other hand, it is possible to target the higher temperature for make-up water to the

condensate tank to raise the temperature of water toward the deaerator. In this scheme, the heat load is shifted from steam to make-up water and steam (heat source) injection could be decreased at the deaerator. Make-up water as the only heat sink is required to be included in the data sheet for the HEN design, as shown in Fig. 7-3e. Another heat sink, steam injection to the deaerator, is not required to be included in the data sheet for the HEN design.

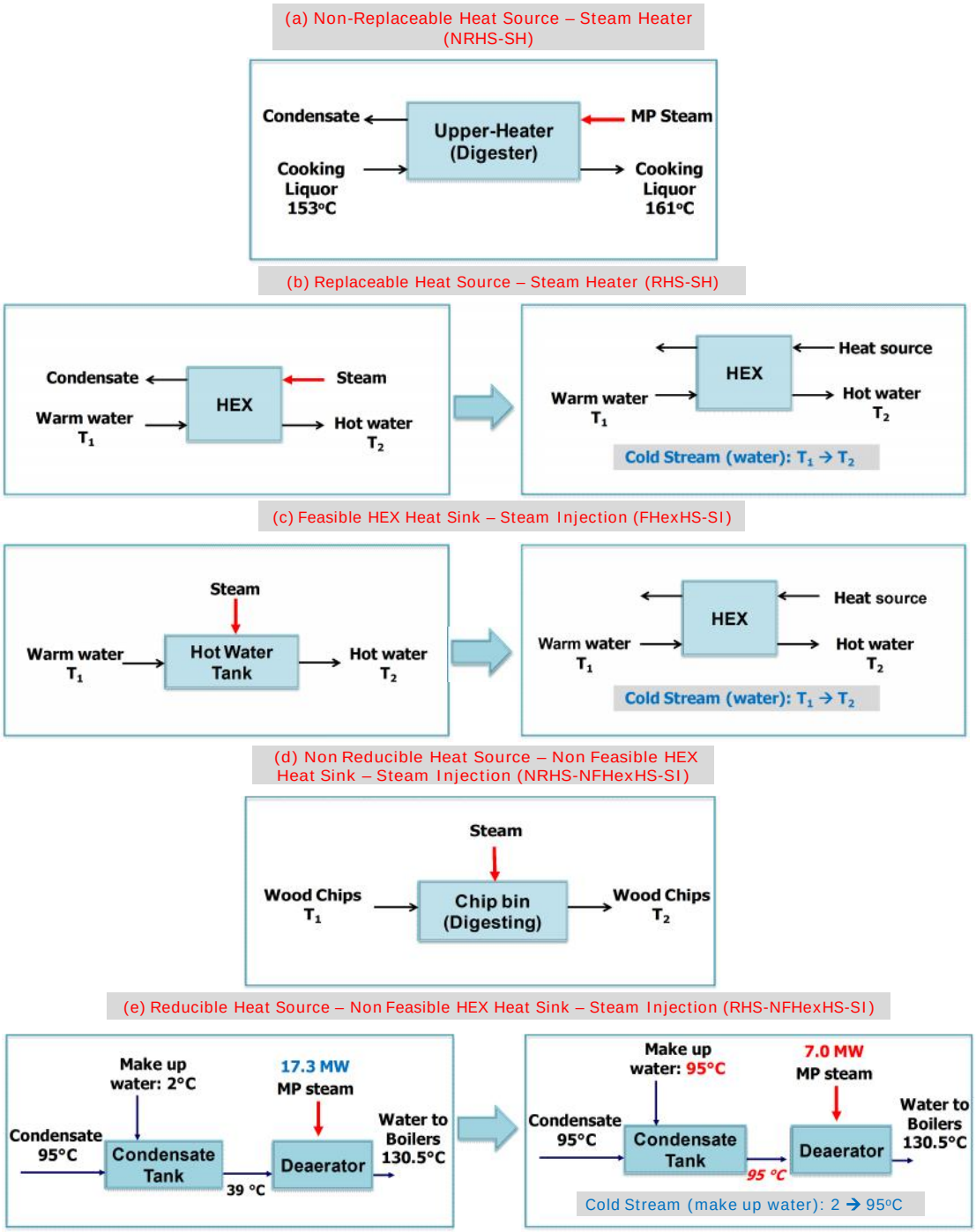

Fig. 7-3 – Five different categories of steam users in water-based processes

7.1.1.2 Phase 2: Interaction in process energy system

The steam injection in the process line is also characterized as "reducible heat source, non-feasible HEX heat sink (RHS-NFHexHS-SI)", however, the assessment of steam saving potential is more complex. In such a case, the interaction in the process energy system is carried out to

investigate the opportunity for steam saving. The potential for steam saving at these non-isothermal mixings can be evaluated by shifting the heat load from steam to water by targeting the higher temperature for water in the process (Fig. 7-4). However, several constraints such as temperature of reactors and also temperature of water to temperature sensitive equipment should be assessed to target this new water temperature (Fig. 7-2). Analysis of the constraints is a prerequisite task to propose the new water temperature to the process line. In general, carrying out this phase also gives an accurate estimation for the temperature of liquid effluents that are the heat sources available for heat exchanging (Fig. 7-4).

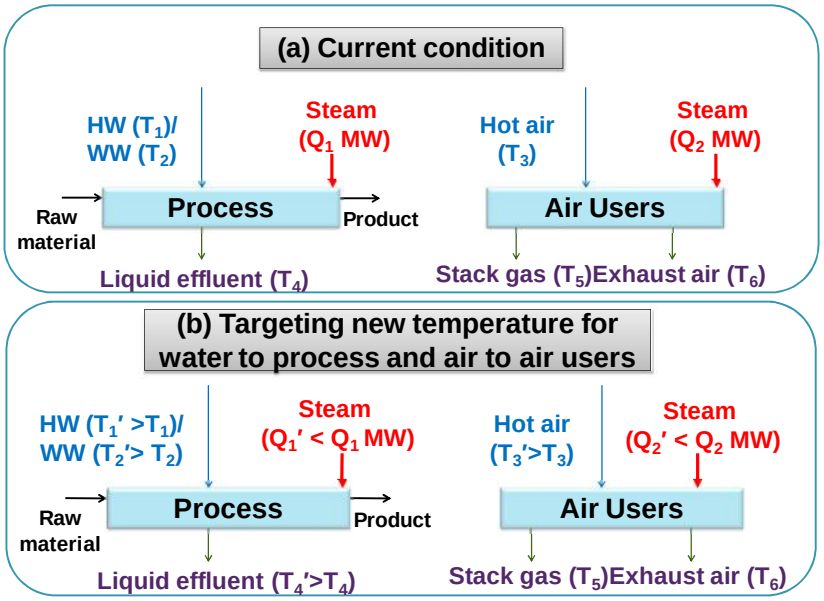

Fig. 7-4 - Simple schematic of Step 1-Phase 2 and 3

7.1.1.3 Phase 3: Air inlet constraint

Air is widely used in water-based processes, for instance at the boiler or dryer of the P&P mill. It requires a significant amount of energy to be pre-heated. It can be transferred to different parts of the process with less difficulty than other streams, such as stack gases, effluents, etc. The temperature of the air inlet to air users (e.g., boilers and dryers in Kraft pulping) has a significant impact on their efficiency; the higher the temperature of the air to air users, the more energy efficiency (e.g., less steam consumption as shown in Fig. 7-4).

7.1.2 Step 2: Assessment of waste heat and existing HEXs

7.1.2.1 Evaluation of waste heat

The liquid and gas waste streams are the major heat sources in the process. These streams should be analyzed carefully in order to identify the maximum potential of their available heat before being vented into the atmosphere or sent to wastewater treatment. These streams are classified into two categories: high and low corrosive. If the high corrosive waste stream is directed to a HEX, its outlet temperature from HEX should be higher than if the low corrosive waste stream one had been directed to it in order to prevent corrosion inside the HEX. Figure 7-5 illustrates some examples of high and low corrosive streams of the Kraft process and the outlet temperature for each of them. For instance, the stack gas outlet temperature of the recovery or hog fuel boiler should be between 125-130°C to prevent sulfuric acid condensation in the HEX (Mostajeran Goortani et al., 2011). On the other hand, natural gas is sulfur free and the outlet temperature of the stack gas of the natural gas power boiler should be between 65-75°C in order to avoid water condensation and, consequently, the carbonic acid formation. Since the exhaust air of the dryer is not corrosive and just contains evaporated water, the outlet temperature of that from HEX can be at a higher ΔT_{min} (minimum approach temperature) than ambient temperature (here T_a=-10°C for winter time). Since the liquid effluents are exploited to heat up liquid streams and in particular water, the non-corrosive liquid effluents can be discharged at a higher ΔT_{min} than fresh water temperature (here T_{FW}=2°C for winter time) while for the corrosive ones, such as acidic and alkaline effluents, 25-30°C is proposed (Mateos-Espejel et al., 2010d, 2011c).

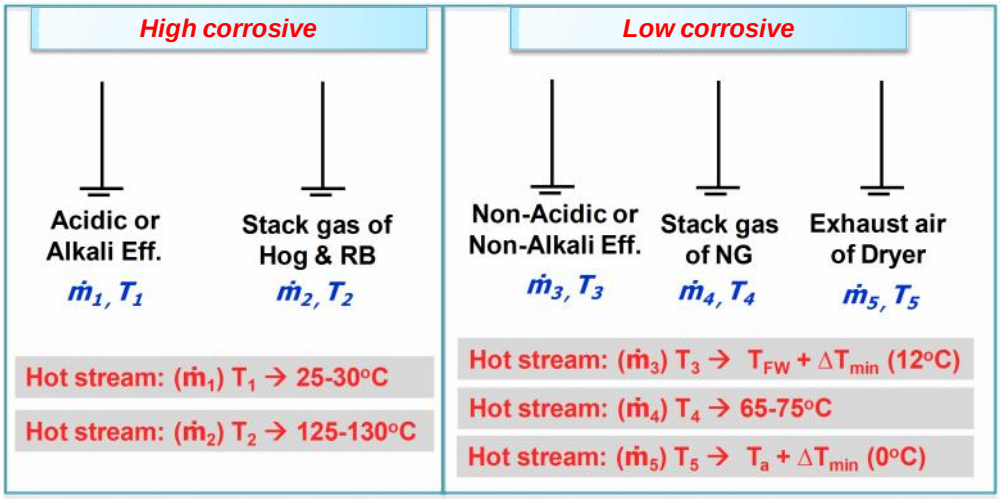

Fig. 7-5 – Two categories of waste streams; high and low corrosives (ambient temperature in winter: Ta=-10°C, temperature of fresh water in winter: T_{FW}=2°C, and minimum temperature approach: ΔT_{min}=10°C)

7.1.2.2 Evaluation of existing HEXs

Process stream HEXs are those HEXs that do not utilize steam. They recover the heat of waste streams to heat up other streams, such as water, air, etc. The existing process stream HEXs are assessed to be employed in a new design. Three different process stream HEXs are distinguished: liquid-liquid and liquid-gas, which are mainly used to heat up water and gas-gas, which is used to heat up air. In the new design, the area, the location, and the phases inside of each existing HEX should be considered to minimize the changes in HEX network.

7.1.3 Step 3: HEX network design

An algorithm is developed to design the HEN and is composed of four phases (Fig. 7-6). To explain this algorithm a simple schematic of a water-based process is used, as demonstrated in Fig. 7-7a. In the first phase (Fig. 7-7b), the first targeting temperatures for the water used in the process and the air in the air users (e.g., boilers, dryers, etc.), as explained in step 1, are applied in the simulation of the process. The change in temperature of liquid effluents is also evaluated. In phase 2 (Fig. 7-7c), the data is extracted in the excel sheet (as illustrated in Fig. 7-3 and 7-5). The data consists of the inlet and outlet temperatures and the heat requirement of each heat sink and the inlet temperature, acceptable outlet temperature (step 2), and the available heat at each heat source. The heat sinks mainly include water and air streams to different unit operations whereas all the liquid and gas effluents are involved as the heat sources.

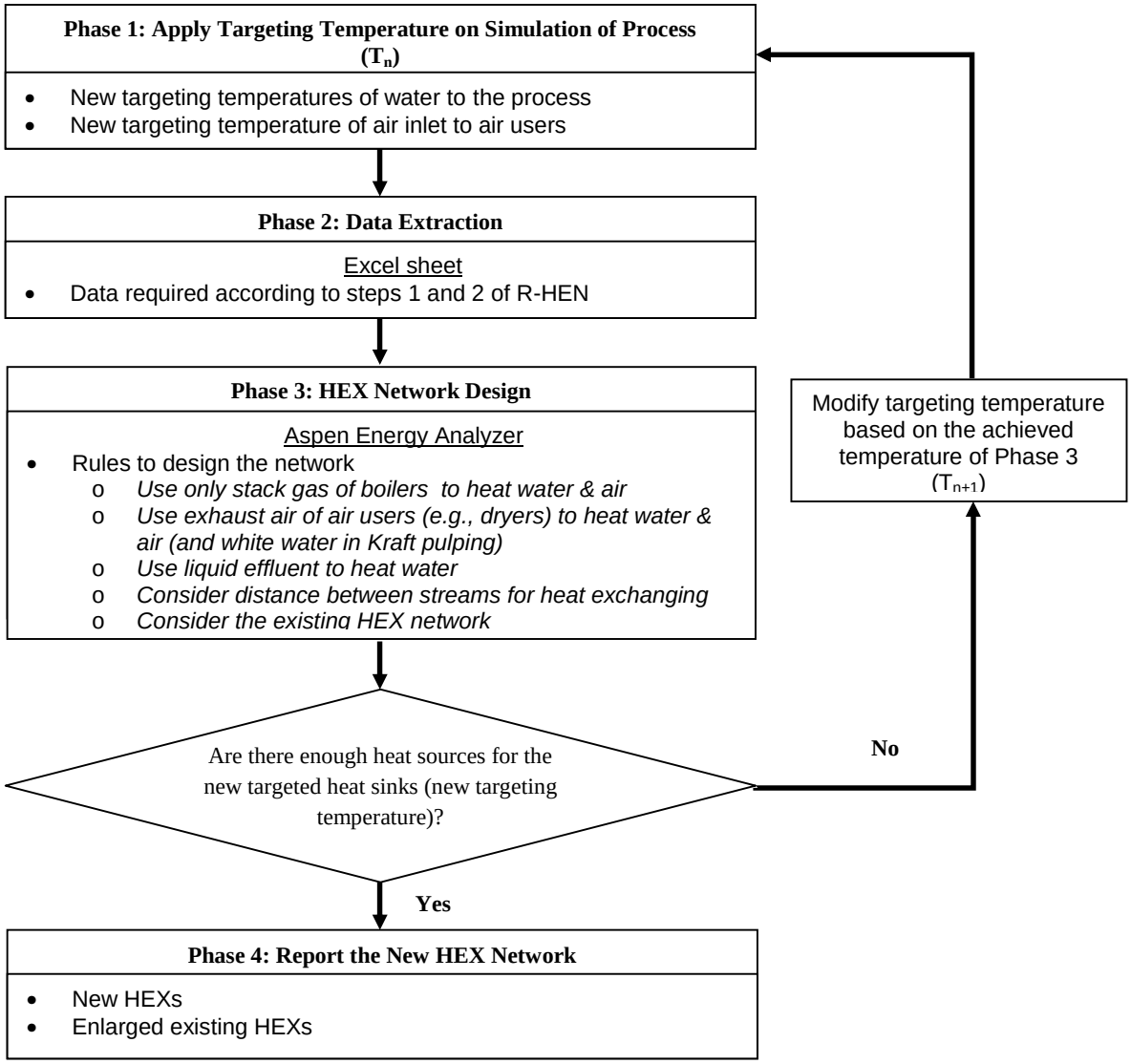

Fig. 7-6 – HEX network design algorithm

In phase 3 (Fig. 7-7c), the extracted data are entered in the Aspen Energy Analyzer; however, they could be entered in any other HEX network design software or even could be done by hand. The minimum approach temperature (ΔT_{min}) for gas-gas (G-G) and gas-liquid (G-L) HEXs is considered higher than the ΔT_{min} for liquid-liquid (L-L), gas-steam (G-ST), and liquid-steam (L-ST) HEXs. This is explained by the low heat transfer coefficient (Table 7-1) on the gas side that results in a large HEX area. In this study, the ΔT_{min} is considered 10°C for L-L, G-ST, and L-ST (Mateos-Espejel et al., 2011c) and 15°C for G-G and G-L.

The HEN is designed based on practical rules that offer direct guidelines to choose the connections between hot and cold streams. These rules are presented as follows:

Rule 1: Use only the stack gas of boilers to heat up water and air. This rule represents the typical air and water economizers at the boilers.

Rule 2: Use only the exhaust air of air users (e.g., dryers of Kraft pulping) to heat up water and air (and white water in Kraft pulping). This rule shows the typical air, water, (and white water) economizers at the air users (e.g., dryers).

Rule 3: Use liquid effluent to mainly heat up water. This rule expresses the typical water-liquid effluent HEXs. It also suggests avoiding from the proposal of fin HEXs (e.g., radiator) for pre-heating the air as much as possible.

Rule 4: Consider the distance between streams for heat exchanging. The best way to do this is to use the map of the plant or mill to avoid extensive piping to transfer one stream from one side of the process to the other. This means that the local heat recovery should be considered first.

Rule 5: Consider the existing HEX network. This leads to minor adjustments in the existing HEN. It also helps to employ the existing HEXs effectively. Therefore, the total number of HEXs that should be purchased is minimized.

The first targeting temperatures require greater heat demand compared to current conditions. After the HEX network design (Fig. 7-7c), it should be explored whether there is enough heat available for the new heat requirements (first targeting temperature) or not. If the heat available from the heat sources is not sufficient to supply the heat for heat sinks and achieve the first targeting temperature, the targeting temperature should be modified. For this reason, the designed HEX network of phase 3 (Fig. 7-7c) is used to determine the second targeting temperature (Fig. 7-7d). The temperature obtained for water and air sinks after applying phase 3 (Fig. 7-7c) would be the second targeting temperature for the second trial.

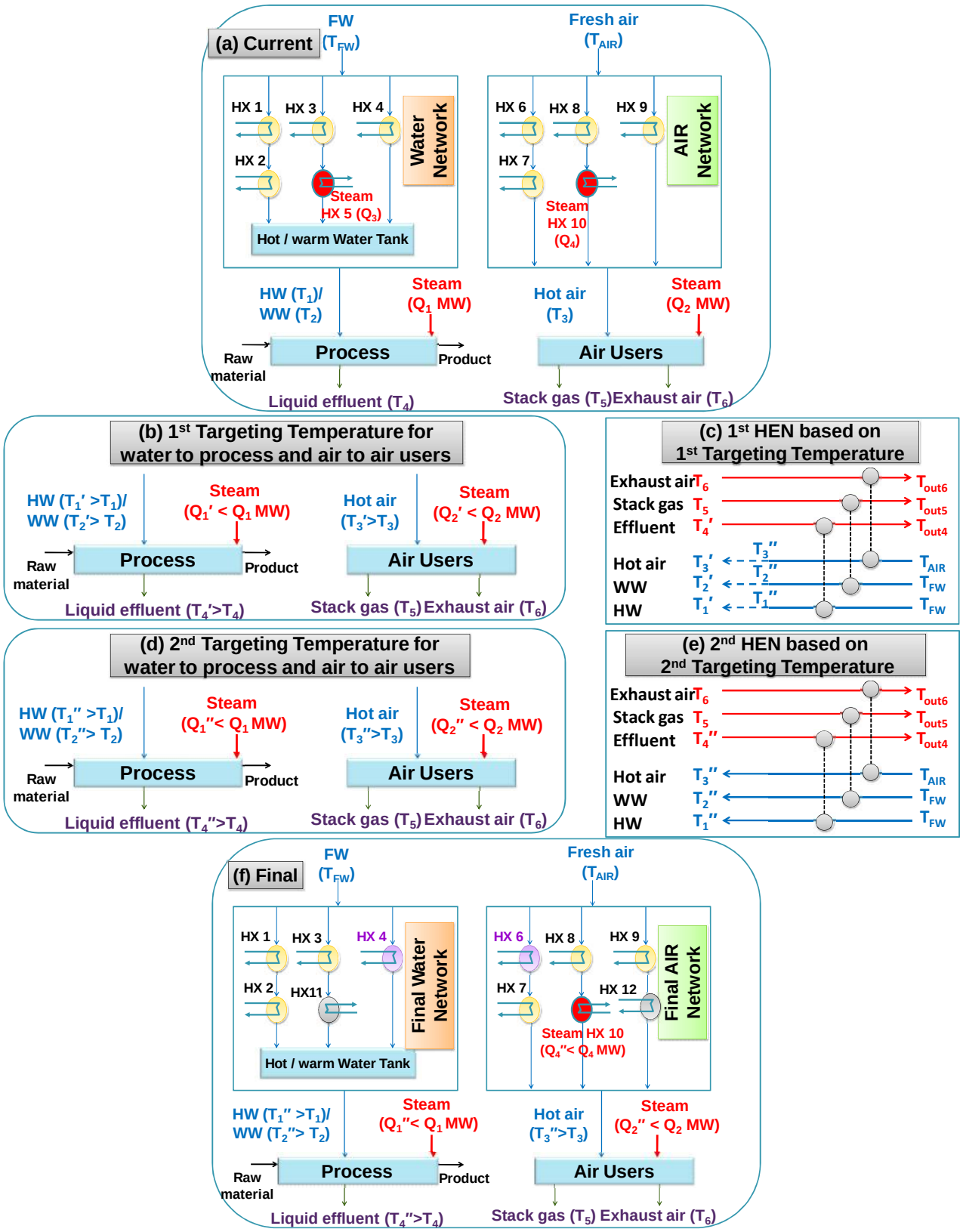

Fig. 7-7 - Simple schematic of a water-based process in (a) current condition with process line, air users, water and air networks, (b) Step 3-Phase 1 of first trial, (c) Step3 – Phase 2 & 3 of first trial, (d) Step 3-Phase 1 of second trial, (c) Step3 – Phase 2 & 3 of second trial, (e) final changes

The second targeting temperature of water and air (Fig. 7-7d) are applied in the simulation of the process to update the temperature of liquid effluents (phase 1). These temperatures are also updated in the excel data sheet (phase 2) and, consequently, in the Aspen Energy Analyzer (phase 3), as shown in Fig. 7-7e. The designed HEX network from the first trail is redesigned with the minor changes (Fig. 7-7e). This procedure should be continued until the available heat from heat sources provides enough heat for the heat sinks (Fig. 7-7e). However, it should be noted that in this work two trails have always been sufficient to generate a feasible solution. Finally, the new network is generated and reported, including the new HEXs that should be purchased and the existing HEXs that should be enlarged (Fig. 7-7f).

7.1.3.1 Steam saving

The steam consumption is calculated for "replaceable heat source – steam heaters (RHS-SH)," "feasible HEX heat sink- steam injection (FHEXHS-SI)," and "reducible heat source-non feasible HEX heat sink-steam injection (RHS-NFHEXHS-SI)" to calculate the total steam saving.

7.1.3.2 Area of HEX

The area (A) of existing and final HEXs is computed as follows:

$$A = \frac{Q}{U\,LMTD} \qquad [1]$$

where Q, U, LMTD denote the heat exchanged, overall heat transfer coefficient, and logarithmic mean temperature difference for the countercurrent flow.

The overall heat transfer coefficients for different two-side state HEXs are collected (EngineeringPage, 2013; ToolBox, 2013) and presented in Table 7-1. For the HEXs with a range of overall heat transfer coefficients (e.g., liquid-liquid), the area is computed with the lower and upper bounds and the average is calculated.

Table 7-1 - The overall heat transfer coefficient for different states

Phase of two sides	Example	U ($W/m^2.^oC$)
Gas-Gas	Air-exhaust air/ air-stack gas	35
Gas-Liquid	Water-stack gas/ water-exhaust air/ air-liquid	70
High temp. gas-Viscous Liquor	Stack gas-black liquor	200-400
Liquid-Liquid	Alkaline effluent-water	150-1200
Steam-Liquid	Upper heater of digester in Kraft mill	300-1200
Steam-Water	Surface condenser of Evaporation/ Water steam heater	1500-4000
Steam-Gas	Air steam heater	30-300

7.1.4 Step 4: Economic analysis

The purchase cost (M_P) of each heat exchanger is calculated using a generic formula (Fraas, 1989) and the cost is indexed for 2012 using the Marshal-Swift cost index:

$$M_P(\$) = C_B * F_D * F_P * F_M \qquad [2]$$

whereby C_B, F_D, F_P, and F_M are a function of the area (A):

C_B is the base cost for a carbon steel floating head HEX and is calculated as follows:

$$C_B = e^{[8.202+0.01506(\ln A)+0.06811\,(ln\,A)^2]} \qquad [3]$$

F_D is the HEX type cost factor when switching from a floating head to a fixed head and is calculated based on the following formula:

$$F_D = e^{[-0.9003+0.0906\,(ln\,A)]} \qquad [4]$$

F_P is the design pressure factor to handle pressures up to 4000 kPa and is calculated as the following:

$$F_P = 1.4272 + 0.12088\,[(ln\,A)] \qquad [5]$$

F_M is the material cost factor for stainless steel 316 HEXs:

$$F_M = 2.4053 + 0.39616\,(ln\,A) \qquad [6]$$

The total installed cost of a new HEX is computed as follows (Fraas, 1989):

$$Installed\ cost\ (\$) = 1.31\ \times M_P \qquad [7]$$

The operating cost for the HEXs involves two components of maintenance and repair and also operating supplies. The maintenance and repair annually accounts for 2% of total installed cost of the HEX while this value for operating supplies is 0.5% annually (Peters et al., 2002).

7.2 Result

The result of applying the R-HEN on the mill C is presented below.

7.2.1 Step 1: Identification of saving potential

In the phase 1 of this step, steam users are categories and presented in the second column of Table 7-3.

7.2.1.1 Phase 2: Interaction in process energy system

An example of steam injections in the pulp line of the case study is used to clarify the interaction in process energy system (Fig. 7-8). Figures 7-8a and b display a part of the bleaching department in the Kraft mill. Pulp is washed out in washer #5, bleached in D0 reactor using added chemicals, washed in D0 washer, and heated up in Eop steam mixer (Fig. 7-8a).

There are three steam injection points in this example:

- at washer #5 to maintain the temperature of D0 reactor at 38°C,
- at D0 washer to raise the temperature of pulp to 49°C,
- and at Eop steam mixer to attain 95°C for Eop reactor.
-

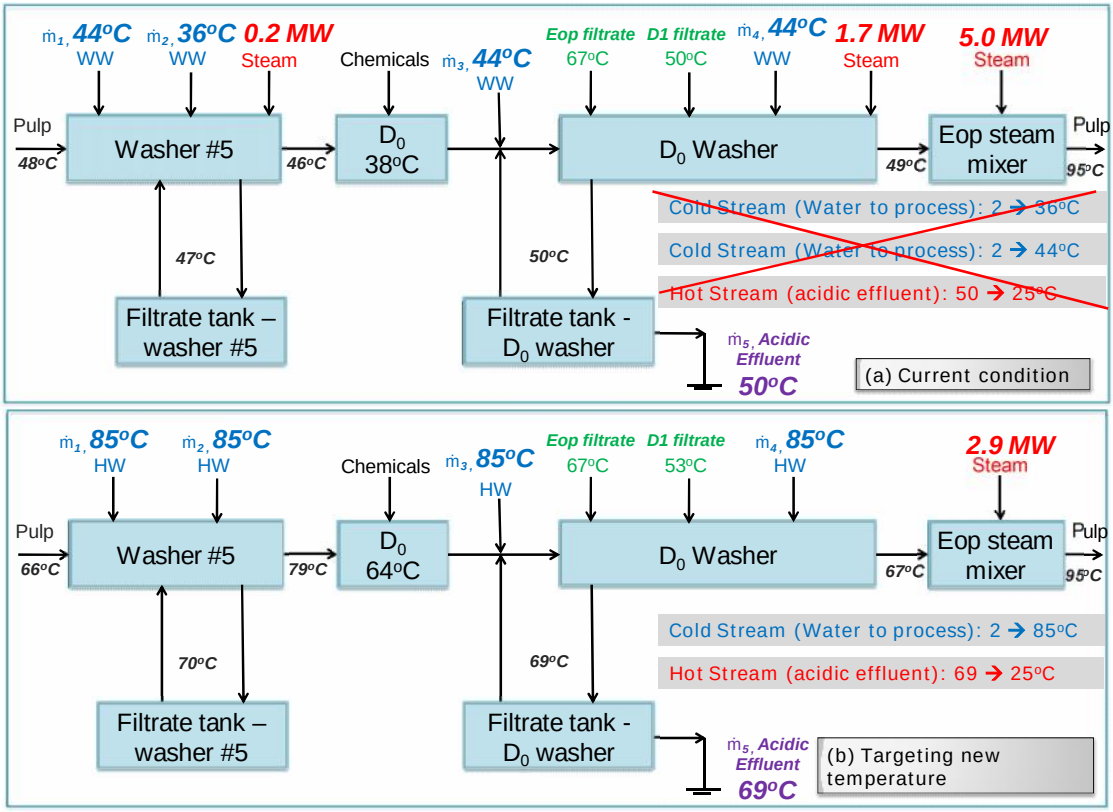

Fig. 7-8 – Example of interaction in the process energy system (WW: warm water, HW: hot water)

The pulp as heat sink cannot be directed to the HEX; it is a non-feasible HEX heat sink. However, it is possible to reduce the steam consumption. The heat load can be shifted from steam to water by targeting the higher temperature for water in the process. To evaluate the potential of steam saving, the current temperature of water to these pieces of equipment is relaxed. If the temperatures of warm water (WW) 44 and 36°C rise to 85°C, the steam injection at washer #5 and D0-washer could be completely eliminated while the steam consumption at Eop steam mixer can potentially decrease from 5.0 to 2.9 MW (Fig. 7-8b). Therefore, the potential of steam saving at these three steam injection points is 4.0 MW.

There are several constraints in pulp line that should be respected when the rise in water temperature is proposed. For instance, the first constraint of the current example is the temperature of the D0 reactor, which should always be in the acceptable range and must not go beyond the acceptable temperature. The second constraint is the temperature of water to the washer, which should not be more than the acceptable temperature of water to this type of washers. In Fig. 7-8, the acceptable temperature of D0 is between 20-80°C (Brogdon and Bell,

2004; Georgia Tech, 2013; Smook, 2002; van Lierop et al., 2008) and the acceptable temperature of water to washer #5 and the D0 washer that are the compact baffle filter (CBF) type is less than 100°C (Brännvall, 2009; Garza Villarreal, 2011; Orzechowska, 2006; Turner et al., 2001). Figure 7-8b shows that by raising the temperature of water to the process line, the temperature of the D0 reactor rises to 64°C, which is within the acceptable range. The proposed water temperature to the washer is 85°C, which is lower than the acceptable water temperature to CBF washers.

In Fig. 7-8, the final temperature of acidic effluent as liquid waste stream is also assessed. It is presented in the final data sheet for the HEN design as a hot source, which must be cooled down from 69 to 25°C (Fig. 7-8b) rather than from 50 to 25°C (Fig. 7-8a), which contains a smaller quantity of heat. The only cold sink is the water that needs to be heated up from 2 to 85°C (Fig. 7-8b).

7.2.1.1.1 Constraints in pulp line

There are two principal types of constraints in the process line of the Kraft mills: the temperature of bleaching reactors and the temperature of water to the washers. The acceptable temperatures of water to the eight washers of case study are collected (Brännvall, 2009; Garza Villarreal, 2011; Orzechowska, 2006; Turner et al., 2001) and presented in Table 7-2. The temperature is one of the main parameters to attain efficient bleaching. The acceptable temperature for the reactor of D0, Eop, and D1 is in the range of 20-80, 60-95, and 60-80°C, respectively (Brogdon and Bell, 2004; Georgia Tech, 2013; Smook, 2002; van Lierop et al., 2008).

Table 7-2 – Acceptable temperature of water to different washers of the mill

	Washer	Typical temperature (^{o}C)
Washing	2 Rotary vacuum drums (RVD)	80-85
	3 Compact baffle filters (CBF)	<100
Bleaching	3 Compact baffle filters (CBF)	<100

7.2.1.2 Phase 3: Air inlet constraint

There are two main air users in Kraft pulping: boilers and dryers. Boilers are the steam suppliers in the process and if the difference between the temperature of stack gas and air inlet decreases, the efficiency of the boiler increases (Chiogioji, 2008; Smith and Reddy, 2013). Therefore, a

certain amount of fuel consumption results in greater steam production or a certain amount of steam requirement consumes a lower amount of fuel (Fig. 7-9a). A sensitivity analysis on the effect of the air inlet temperature on the recovery boiler of the case study is conducted. Figure 7-9a displays the effect of the air inlet on the recovery boiler of a Kraft mill. If the temperature of the air inlet is low compared to the stack, a new air inlet temperature is targeted and represented as the final temperature of the cold stream in the data sheet for the HEN design (Fig. 7-9b). In Fig. 7-9b, if the air inlet temperature rises to 170°C, which requires 2.5 MW of extra heat, the steam generation increases by 2.0 MW due to some heat loss in the boiler. This extra heat requirement (2.5 MW) can be supplied by recovering the heat of the waste stream to produce air at a higher temperature, which can then be transformed to valuable live steam generation (2.0 MW) at the boiler. The air temperature of 170°C is given as an example and could be targeted as high as can be tolerated for the specific boiler.

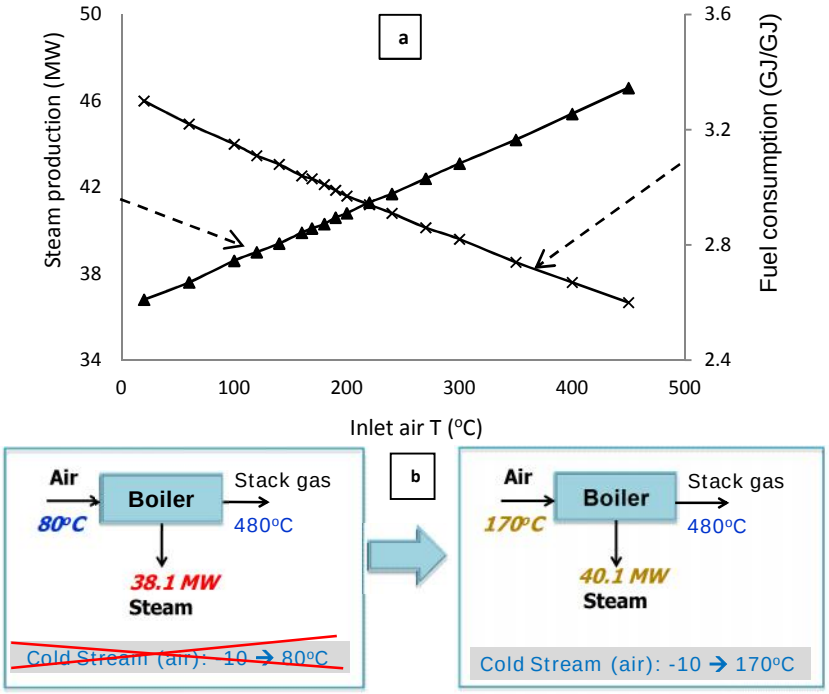

Fig. 7-9 – (a) the effect of air inlet temperature to boiler, (b) targeting new air inlet temperature to boiler

The ideal range of the air inlet temperature to the dryer is between 82-93°C (Hill and Chaloux, 2012). A sensitivity analysis of air inlet temperature in the process simulation is conducted to assess the impact on steam consumption. Figure 7-10a demonstrates this impact. Results show that the higher the air inlet temperature to the dryer, the lower the steam requirement for drying.

Thus, similar to the boiler if the temperature of the air inlet to the dryer is low, the new temperature is targeted and represented as the final temperature of the cold stream in the data sheet for the HEN design (Fig. 7-10b). In Fig. 7-10b, the steam consumption decreases by 1.4 MW, if the air inlet temperature rises to 82°C (lower bound of ideal temperature) that requires 0.7 MW of extra heat. This extra heat can be provided by heat recovery from the waste streams.

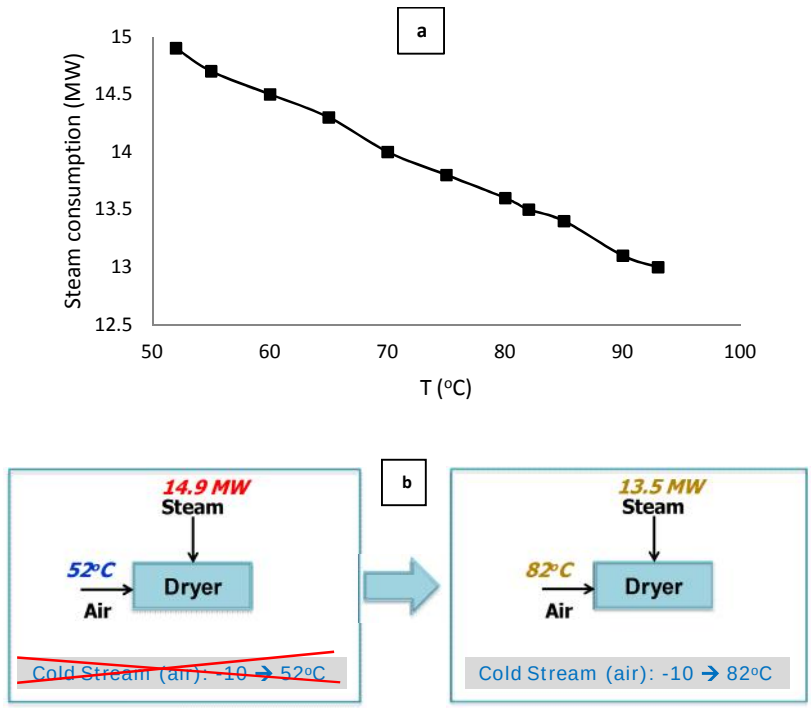

Fig. 7-10 - (a) the effect of air inlet temperature to the dryer of the Kraft process, (b) targeting new air inlet temperature to dryer of Kraft process

7.2.1.3 Targeting

Table 7-3 presents the total number of steam users from five different categories, their current heat consumption, and the potential for the elimination or reduction of steam at each user. The results show that there are six NRHS-SH heaters (Table 7-3a) that consume 41.5 MW of steam (heat source). This steam cannot be replaced by other heat sources. There are six RHS-SH heaters (Table 7-3b) where the steam potentially can be replaced by other heat sources and save 22.3 MW. In the case of steam injection points, there is just one FHexHS-SI (Table 7-3c) in which white water (heat sink) can be directed to HEX and steam (heat source) can be replaced by other heat sources and save 10.6 MW. There are two NRHS-NFHexHS-SI points (Table 7-3d) where the heat sink cannot be directed to HEX and the steam also cannot be reduced. The total

number of RHS-NFHexHS-SI points where the heat sinks cannot be introduced to HEXs but the steam can be reduced are five and the steam can potentially be diminished from 26 to 10.3 MW (Table 7-3e). For the case study, the air inlet temperature to the dryers and boilers is high enough and, therefore, there is no necessity to target a new temperature for the air inlets.

Table 7-3 – The potential for steam reduction and final steam consumption after the HEX network design for all steam users of the mill

#	Equipment	Current (MW)	Potential (MW)	Final after HEX network design (MW)
(a) Non-Replaceable Heat Source-Steam Heater (NRHS-SH)				
1	Upper heater – Digesting	3.8	3.8	3.8
2	Lower heater – Digesting	2.2	2.2	2.2
3	NaClO3 heater #1 &2 – Chem. Prep.	0.1	0.1	0.1
4	Chemical reboiler – Chem. Prep.	1.6	1.6	1.6
5	Dryer – PM	24.0	24.0	24.0
6	Evaporation	9.8	9.8	9.8
Total NRHS-SH		***41.5***	***41.5***	***41.5***
(b) Replaceable Heat Source – Steam Heater (RHS-SH)				
1	Glycool loop – PM	7.6	0	0
2	Air heater - PM	4.6	0	3.0
3	Green liquor heater – Recaust.	1.1	0	0
4	Air heater – RB	6.8	0	3.0
5	Air heater – PB#3	1.9	0	0
6	Water heater – Chem. Prep.	0.3	0	0
Total RHS- SH		***22.3***	***0***	***6.0***
(c) Feasible HEX Heat Sink – Steam Injection (FHexHS-SI)				
1	Silo cheat - PM	10.6	0	0
Total FHexHS-SI		***10.6***	***0***	***0***
(d)Non-Reducible Heat Source– Non-Feasible HEX Heat Sink – Steam Injection (NRHS-NFHexHS-SI)				
1	Chip bin – Digesting	5.4	5.4	5.4
2	Steaming vessel – Digesting	6.1	6.1	6.1
Total NRHS-NFHexHS-SI		***11.5***	***11.5***	***11.5***
(e)Reducible Heat Source– Non-Feasible HEX Heat Sink – Steam Injection (RHS-NFHexHS-SI)				
1	Pre-D0 washer – Bleaching	0.2	0	0
2	D0 washer – Bleaching	1.7	0	0
3	Eop – Bleaching	5.0	2.9	4.2
4	WW production at steam ejector condenser – Chem. Prep.	1.8	0.3	0.3
5	Deaerator – Steam plant	17.3	7.0	*6.3*
Total NRHS-NFHexHS-SI		***26.0***	***10.3***	***10.8***

Table 7-4 presents the aggregate results of the theoretical minimum steam requirement (TMinSR) and theoretical maximum steam saving (TMaxSS) for all five categories as well as the complete mill. The results suggest that 43% of current steam consumption can potentially be saved while at least 57% of current steam consumption is necessary and should be used at current steam users.

Table 7-4 – Targeting and final steam savings by means of R-HEN

#	Type of steam user		Current (MW)	TMinSR* (MW)	Final SR after HEN design (MW)	TMaxSS† (MW)	Final SS after HEN design (MW)
1	Steam heater	NRHS-SH	41.5	41.5	41.5	0	0
2		RHS-SH	22.3	0	6.0	22.3	16.3
3	Steam injection	FHexHS-SI	10.6	0	0	10.6	10.6
4		NRHS-NFHexHS-SI	11.5	11.5	11.5	0	0
5		RHS-NFHexHS-SI	26.0	10.3	10.8	15.7	16.1
Total (MW)			***111.9***	***63.3***	***69.8***	***48.6***	***42.1***
Percentage over current consumption			***-***	***57%***	***62%***	***43%***	***38%***

*TMinSR: Theoretical Minimum Steam Requirement
†TMaxSS: Theoretical Maximum Steam Saving

7.2.2 Step 2: Assessment of waste heat and existing HEXs

7.2.2.1 Evaluation of waste heat

There are 12 waste streams currently used to preheat air or water. There are also 16 other waste streams that can be included in the data sheet for the HEN design. All the waste streams and their inlet and outlet temperatures are presented in Table 7-7. The mixed Cp of stack gas is 1.25 kJ/kg.^{o}C (Mateos-Espejel et al., 2011c).

7.2.2.1.1 Heat recovery of exhaust air

The exhaust air of the dryer is the biggest heat source in P&P that can be recovered, because almost all the energy of steam, which is utilized in the dryer, is transferred to the exhaust air. However, the exhaust air contains a significant amount of evaporated water and its heat capacity has strong non-linearity with temperature change. The data that have been published by (Söderman and Pettersson, 2003) for the heat intervals of exhaust air at varying degrees of humidity and different temperature intervals are employed to develop a thermodynamic table for mixed Cp of exhaust air. Table 7-5 presents the mixed Cp of exhaust air at different levels of humidity and temperature intervals. Figure 7-11 demonstrates the non-linearity behavior of mixed Cp from Table 7-5. The graphs for three different humidity levels indicate that by reducing the temperature, at first, the mixed Cp is constant until a sudden rise due to vapor condensation. Then, by a reduction in temperature, the mixed Cp decreases again. In addition, at lower humidity, the sudden rise in mixed Cp takes places at a lower temperature and this can be explained by the Mollieir chart of condensation. Vapor starts to condense out of the air at a lower temperature than the dew point. This table and graph could be used to quantify the available heat in exhaust air.

Table 7-5 – Mixed Cp for exhaust air of dryer at different levels of humidity and temperature intervals (information extracted from work of (Söderman and Pettersson, 2003))

	Mixed Cp (kJ/kg.°C)			
		Exhaust air Humidity (kg water /kg dried air)		
		0.114	0.141	0.156
Temperature interval (°C)	0-10	0	0	0
	10-20.	2.57	2.73	2.72
	20-30	3.81	4.05	4.03
	30-34	5.07	5.39	5.37
	34-38	6.06	6.44	6.41
	38-42	7.28	7.75	7.7
	42-46	8.8	9.36	9.31
	46-50	10.7	11.39	11.32
	50-54	10.44	13.97	13.89
	54-58	1.1	15.97	17.2
	58-62	1.1	1.24	6.83
	62-66	1.1	1.24	1.25
	66-70	1.1	1.24	1.25
	70-80	1.1	0.98	1.1
	80-90	0.94		

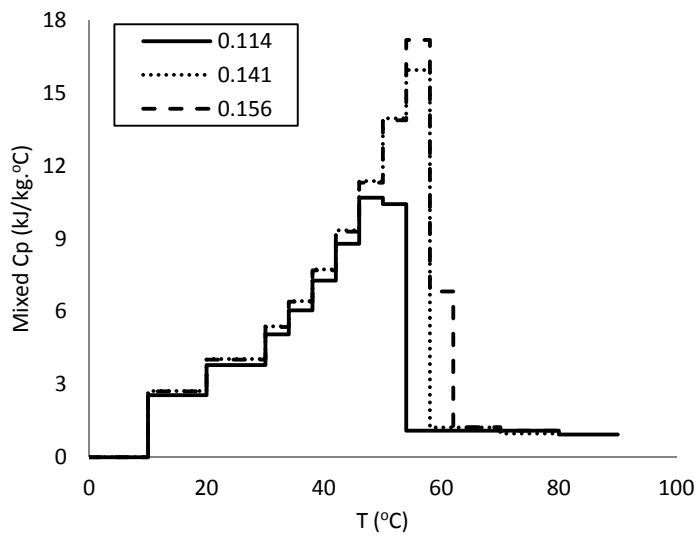

Fig. 7-11 – Mixed Cp of exhaust air of dryer versus temperature at different levels of humidity (information extracted from work of (Söderman and Pettersson, 2003))

The mixed Cp of exhaust air of dryer of the case study can be calculated by the extrapolation of Table 7-5. The humidity of the exhaust air of the dryer is 0.110 kg water/ kg dried air and the mixed Cp for different temperature intervals is presented in Table 7-6.

Table 7-6 – Mixed Cp of 0.110 kg water/ kg dried air humidity of dryer exhaust air of the mill at different temperature intervals

T interval (°C)	0-10	10-20	20-30	30-34	34-38	38-42	42-46	46-50	50-54	54-58	58-62	62-66	66-70	70-75
Mixed Cp (kJ/kg.°C)	0	2.55	3.78	5.02	6.00	7.21	8.72	10.60	9.93	1.08	1.08	1.08	1.08	1.08

7.2.2.2 Assessment of existing HEXs

There are three types of existing process stream HEXs in this mill: liquid-liquid (L-L), gas-liquid (G-L), and gas-gas (G-G).

L-L HEXs are mainly employed to heat up water by recovering the heat of some waste streams or cool down some streams.

- One Eop exchanger to recover the heat of alkaline effluent at stage Eop of the bleaching section and produces warm water (Fig. 7-15a).
- Four blowdown exchangers to recover the heat of blowdown water of boilers and raise the temperature of boilers' feed water.
- One chemical cooler in the chemical preparation section to cool down the produced chemicals using fresh water (Fig. 7-15a).

The mill also utilizes 10 G-L HEXs and similar to the L-L HEXs, they are used to cool down some waste streams using water and recover the heat to produce hot and warm water.

- Three existing water economizers (Fig. 7-15a)
    - One at the wet scrubber to exploit the heat of the recovery boiler stack gas and produce warm water.
    - Two at the dryer of the paper machine to recover the heat of exhaust air of the dryer and produce warm water.
- Four surface condensers (Fig. 7-15a)
    - Three at the digesting department (surface condenser-digesting, chip bin surface condenser, and non-condensable gas surface condenser) to condensate the non-clean steam of the chip bin, steaming vessel, and black liquor flash tanks and produce warm or hot water.
    - One at the evaporation (surface condenser-evaporation) to similarly condensate the non-clean steam from the last train of evaporators and produce warm water.
- There is also one HEX at the paper machine (HEX of clean flashed steam-PM) to condense the clean flashed steam of the dryer and preheat water (Fig. 7-15a).

- There is one steam ejector condenser, which is used to cool down the chemicals. The steam is also injected to produce warm water (Fig. 7-15a).
- The cascade concentrator is employed to concentrate and heat up the black liquor by recovering the heat of the stack gas of the recovery boiler before sending the black liquor to the recovery boiler.

There are also four existing G-G HEXs (Fig. 7-14a) that are mainly used to recover the heat of the exhaust air or stack gas of the power boilers (PB) and preheat the air for the dryer (air economizer-PM) and boilers (air economizer-PB#1, air economizer-PB#2, and air economizer-PB#3).

In total, there are 20 existing process HEXs that are employed in the mill and they should be used effectively in the new network design.

7.2.3 Step 3: HEX network design

Before showing the final HEX network, different phases of step 3 to design the HEX network are illustrated using Fig. 7-12 which is a part of the process of the case study. Under the current conditions (Fig. 7-12a) warm water (WW) at 36 and 44°C is utilized at washer #5, before and at D0 washer. The total steam of 6.9 MW is consumed at washer #5, the D0 washer, and Eop steam mixer to attain and retain the temperature of the pulp. The temperature of acidic effluent is 50°C. In Fig. 7-12b, the first targeting temperature respecting the constraints of step 1 is applied for the water (HW85^{o}C) in the simulation (phase 1). The steam consumption decreases from 6.9 to 2.9 MW and the temperature of the acidic effluent rises from 50 to 69°C. Figure 7-12d illustrates a part of the HEX network of the first trial to supply heat for HW85 (phase 2 and 3). To supply heat for HW85 production, three HEXs are designated: the surface condenser of evaporation (SC-Evap) that currently exists and is employed to cool down the non-clean steam from the last evaporator train, the surface condenser of digesting (SC-Digesting) that also currently exists and is used to cool down the non-clean flashed steam from the steaming vessel of the digesting department and, finally, the wet scrubber, which is currently used to produce the warm water by recovering the heat from the recovery boiler stack gas. The result shows that using these HEXs, the water at 85°C cannot be produced, but at 65°C could be generated. The acidic effluent is also used in the new HEX to produce warm water at 47°C (Fig. 7-12d).

Since the first targeting temperature (85°C) was not achieved, the temperature of 65°C that has been obtained from the first trial of the HEN design is applied as the second targeting temperature in the simulation (Fig. 7-12c) to evaluate the steam injections and the temperature of acidic effluent. The steam injection increases from 2.9 to 4.2 MW and the temperature of acidic effluent decreases from 69 to 57°C. The only parameters that are required to be updated in the data sheet for the HEN design are the temperature of the acidic effluent and the second targeting temperature of water. In the second trial, the water at 65°C could be produced using the available heat while the network to produce it does not change compared to the first estimation (Fig. 7-12e). This is considered as the final design and reported. The acidic effluent is still utilized to produce WW47. The main difference between the network of the first estimation (Fig. 7-12d) and final (Fig. 7-12e) one is in the inlet temperature of the acidic effluent (69 vs 57°C), where in the final network the area for this HEX is bigger than in the first estimation. However, this HEX is much smaller than if the original temperature of 50°C were used in the network design.

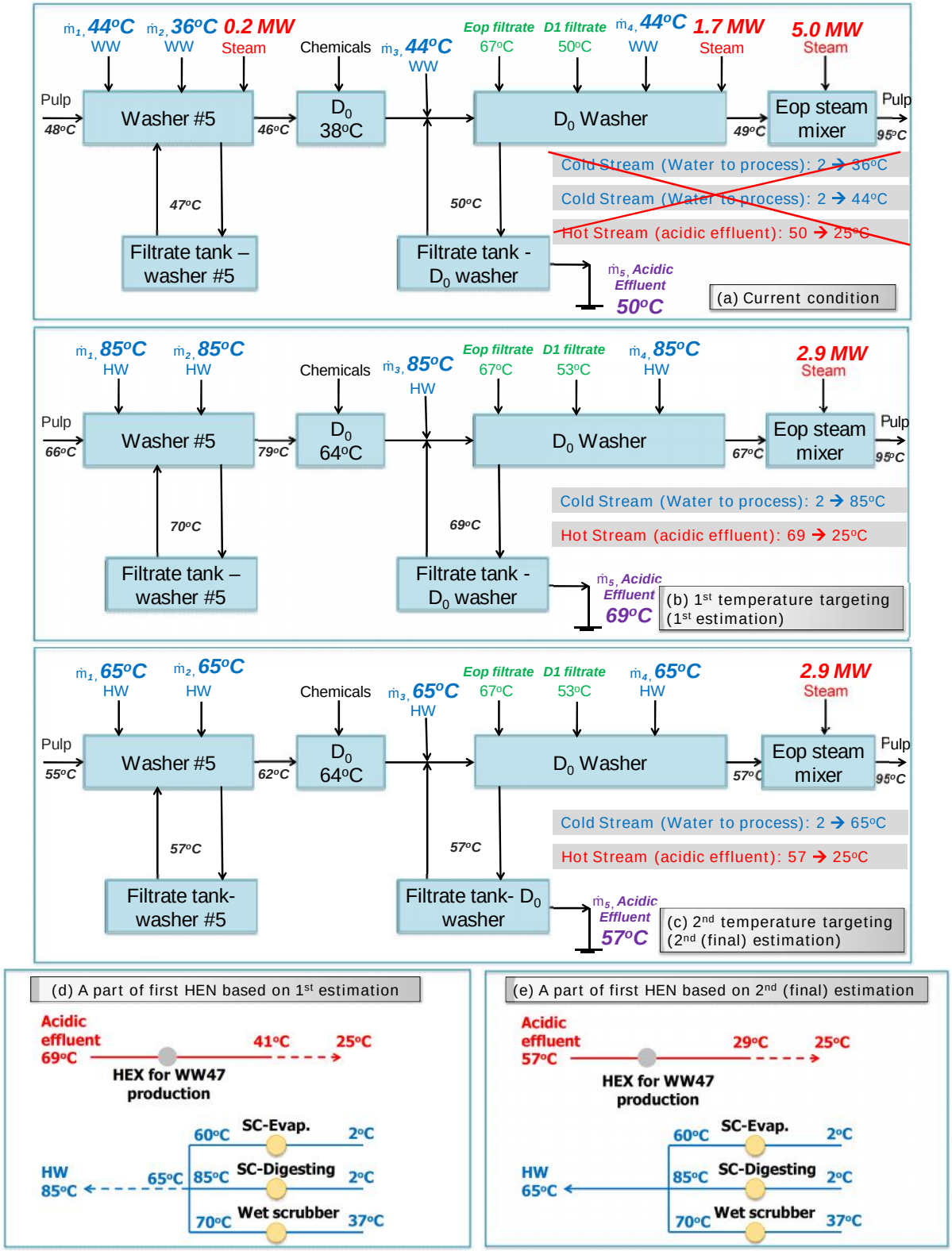

Fig. 7-12 – Example of HEN design

7.2.3.1 Phase 1: Apply targeting temperature on simulation of the process

The first targeting temperatures for water to the process are applied on the simulation of the Kraft process. The current and first targeting temperatures of water to the process are shown in Fig. 7-13a and b.

When the first targeting temperatures of water to the process are applied, the temperature of some liquid effluents from the process is also modified; the new values are given in Fig. 7-13b. They are as follows:

- Temperature of filtrate from washer #5 rises from 47 to 70°C. A part of this filtrate overflows and goes to effluent that can be used as a heat source.
- The temperature of acidic effluent, the filtrate from D0 washer, rises from 50 to 69°C.
- The temperature from the rejects of cleaners and presses of the paper machine rises from 58 to 60°C.

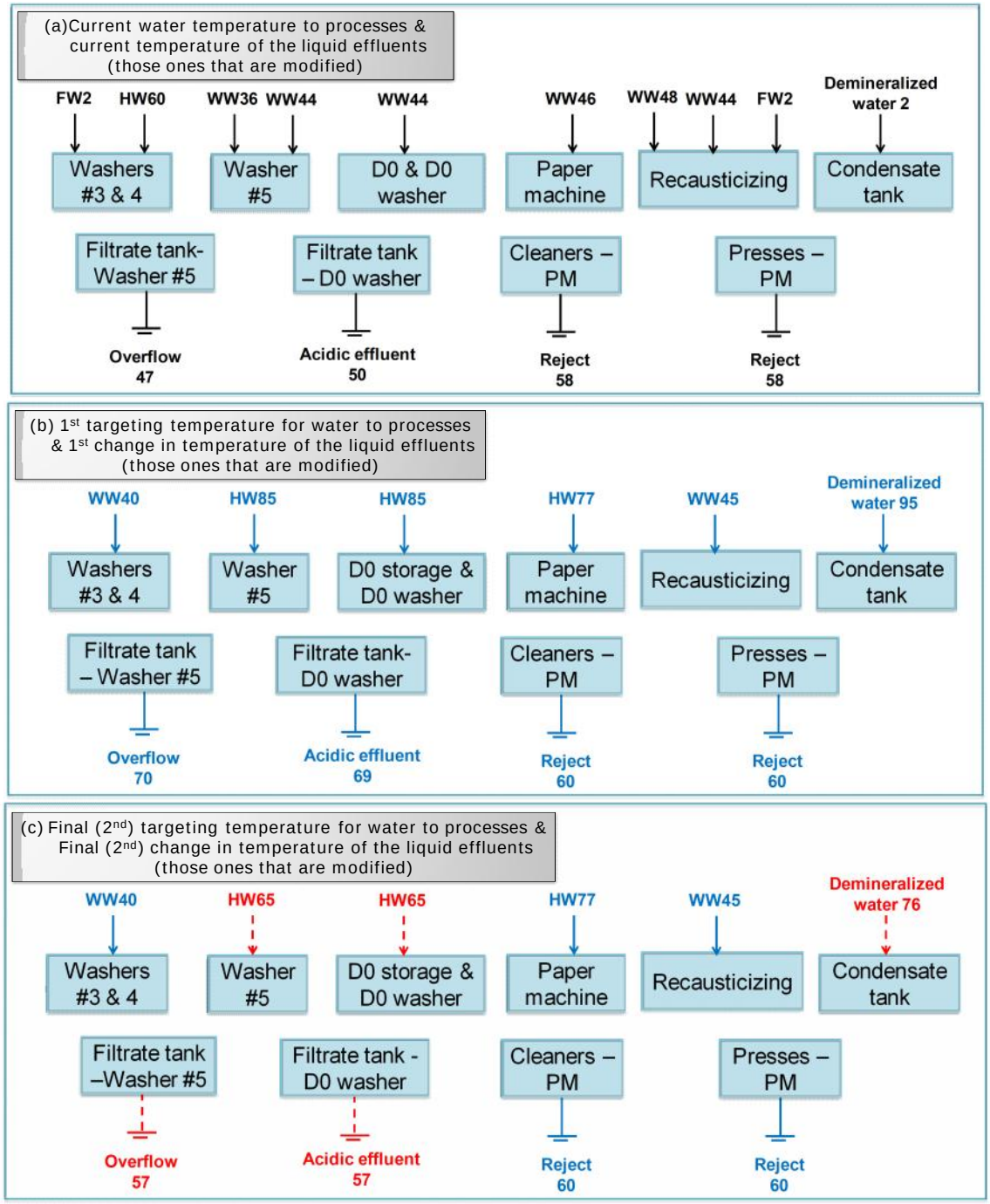

Fig. 7-13 – Targeting temperature of water and changes in temperature of effluent (FW: fresh water, WW: warm water, HW: hot water, PM: paper machine)

7.2.3.2 Phase 2: Data extraction

Table 7-7 presents the extracted data for the HEX network design. The data consists of six air and six water sinks while 28 sources are identified.

Table 7-7 - The extracted data for HEX network design

#	Stream	T_{in} (°C)	T_{out} (°C)	ΔH (kW)
	Heat Sinks			
1	Air to dryer100-PM	-10	100	5102
2	Air to RB	-10	169	4947
3	Air to PB#3	55	172	2219
4	Air to Dryer50-PM	-10	50	1668
5	Air to PB#1 &6	55	210	5140
6	Air to PB#2	55	172	1695
7	WW50	2	50	1743
8	WW40	2	40	9551
9	Demineralized water	2	95 (76)*	9522 (4058)*
10	WW45	2	45	11470
11	HW85 (HW65)*	2	85 (65)*	22100 (16880)*
12	WW77	2	77	23830
	Heat Sources			
1	Non-clean steam- SC Digesting	111.4	25	2975
2	Non condensable gas-NCGSC	75	70	156
3	Non condensable gas- Chip bin SC	75	70	665
4	Eop filtrate – Eop exchanger	67	25	5600
5	Exhaust air of Dryer - PM	75	0	22680
6	Clean flashed steam-HEX-PM	95	93	2939
7	Stack gas of RB- Wet scrubber	86	29	16790
8	Non clean steam- SC Evaopration	74.6	25	10490
9	Stack gas-PB#1	322	128.4	5140
10	Stack gas-PB#2	234	70	2985
11	Stack gas-PB#3	145	70	1791
12	Blowdown water-PB#1,2,3 &6	140.5	12	1722
13	Chemicals – Indirect contact cooler-Chem. Prep.	29.7	10.7	598
14	Steam & Chemicals – Steam ejectors condenser- Chem. Prep.	153.3	2.2	279
15	Deknotter rejects-Deknotter washer	59.9	12	105
16	Overflow- filtrate tank of washer #2	47.5	12	613
17	Non clean condensate of Evaporation	70.4	25	2175
18	Overflow-filtrate tank of washers #3&4	41	12	6697
19	Reject of screeners-Washing	41.1	12	888
20	Acidic effluent of D0-bleaching	68.8 (57)*	25	9552 (7061)*
21	Overflow-D1 filtrate tank	52.4	25	803
22	Overflow-filtrate tank washer #5	70.2 (57)*	12	3261 (2572)*
23	Rejects of cleaners –PM	59.9	12	1333
24	Overflow of white water tank-PM	60.1	12	32190
25	Reject of Presses - PM	60.1	12	5974
26	Sewer of Venturi oxygenator - Scrubber	69	25	325
27	Blowdown of RB	190	12	1506
28	Stack gas-PB#6	135	70	972

*the data in parenthesis represents the second targeting temperature, temperature of effluents, heat requirements of the sink and available heat from heat source

7.2.3.3 Phase 3: HEX network design

The existing HEX network that undergoes modifications is displayed in Fig. 7-14a and 7-15a. The existing HEXs consist of the air preheating and water network using the process stream HEXs and the air and water heaters.

After the first trial for the HEN design using first targeting temperatures (Fig. 7-13b), the results show that using the existing heat source, the heat requirement for heat sinks cannot be met. Therefore, the targeting temperature should be updated based on the data that have been obtained from first HEN design (Fig. 7-13c). The second (final) targeting temperature is applied in the simulation of the process to obtain the second temperature of liquid effluents, as displayed in Fig. 7-13c. The second outlet temperature and heat requirement of water and also the second temperature of liquid effluents and their available heat are updated according to Fig. 7-13c in the data for the HEN design, as shown in Table 7-7 (data in parenthesis). The first designed HEN needs to be modified based on the second targeting temperature and the second inlet temperature of effluents; however, it is a minor adjustment to generate the second (final) HEN. The results show that the available heat can cope with the second targeting temperature of the heat sinks.

The second (final) HEN is demonstrated in Fig. 7-14b and 7-15b. The yellow HEXs are existing process stream HEXs, the red ones are steam heaters, the grey ones are new HEXs that should be purchased, and the purple ones are the existing HEXs that need to be enlarged.

Figure 7-14b shows the new HEN to pre-heat the air for the boilers and dryers. There are five new HEXs that should be purchased:

- Three air economizers (eco.) at the dryer to pre-heat the air for the dryer and recovery boiler (RB) by recovering the heat of exhaust air.
- One air economizer at the power boiler #1 (PB #1) to pre-heat the air for the RB.
- One air economizer at the PB #6 to pre-heat the air for the PB #1 and 6.

Here, it should be noted that power boilers #2 and 3 (PB #2 & 3) are shut down using saved steam and this is the reason for not being included in Fig. 7-14b.

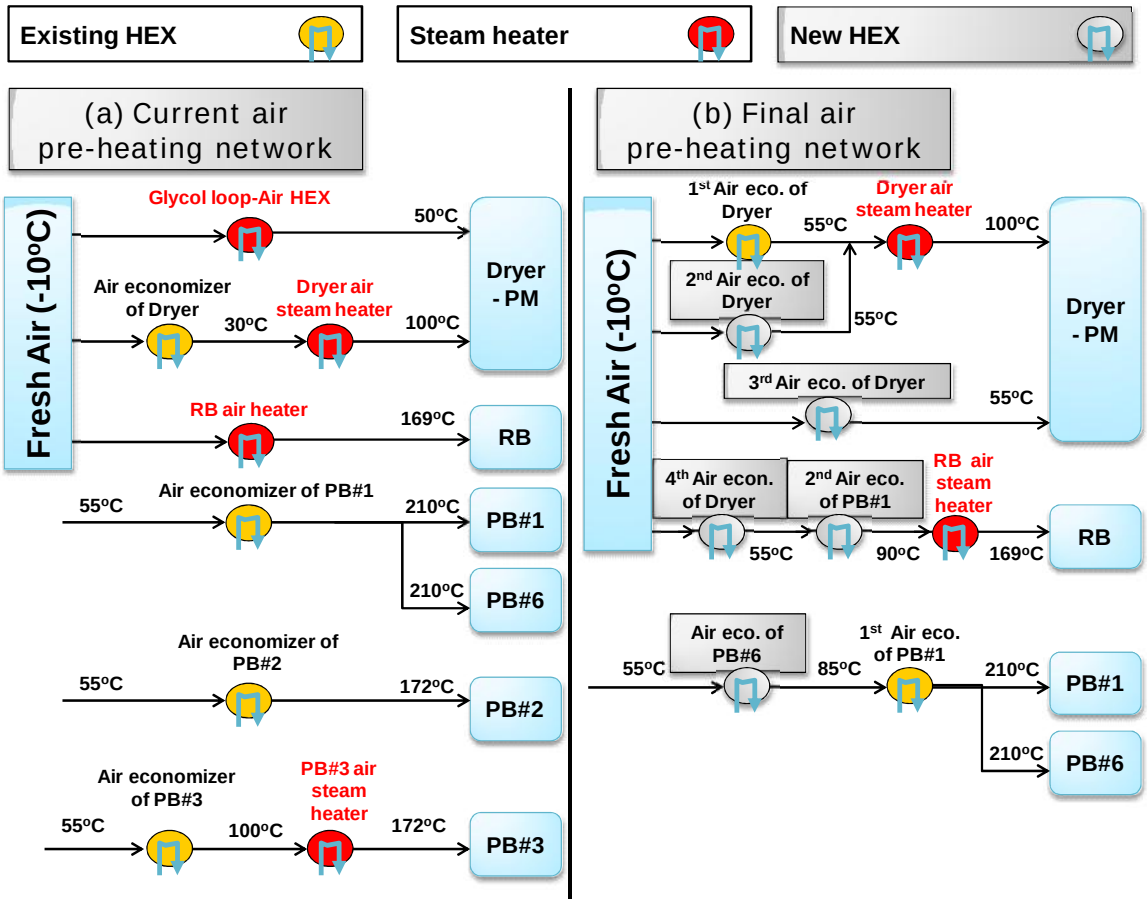

Fig. 7-14 – Current and final air pre-heating network after applying R-HEN (RB: recovery boiler, PB: power boiler, PM: paper machine, eco.: economizer)

Figure 7-15b illustrates the new HEN for the water production network. There are four new HEXs while the area of two existing HEXs should be increased to produce warm and hot water (Fig. 7-15b).

- One new acidic effluent exchanger to recover the heat of overflow filtrate from the D0 stage of bleaching and produce warm water at 47°C.
- One new white water exchanger to recover the heat of overflow filtrate (white water) from the filtrate tank of the paper machine and produce warm water at 50°C.
- One new non-clean condensate exchanger to recover the heat of non-clean condensate from the evaporation train and produce demineralised water at 60°C for the condensate tank of the steam plant.

- One new blowdown exchanger to recover the heat of blowdown water from the RB, and PB #1 and 6 and produce demineralised water at 95°C for the condensate tank of the steam plant.
- The existing area of HEX for clean flashed steam should be enlarged to produce water at 77°C by condensing the clean flashed steam from the dryer of the paper machine.
- The existing area for the surface condenser of evaporation should be enlarged to produce water at 60°C by condensing the non-clean steam from the evaporation train.

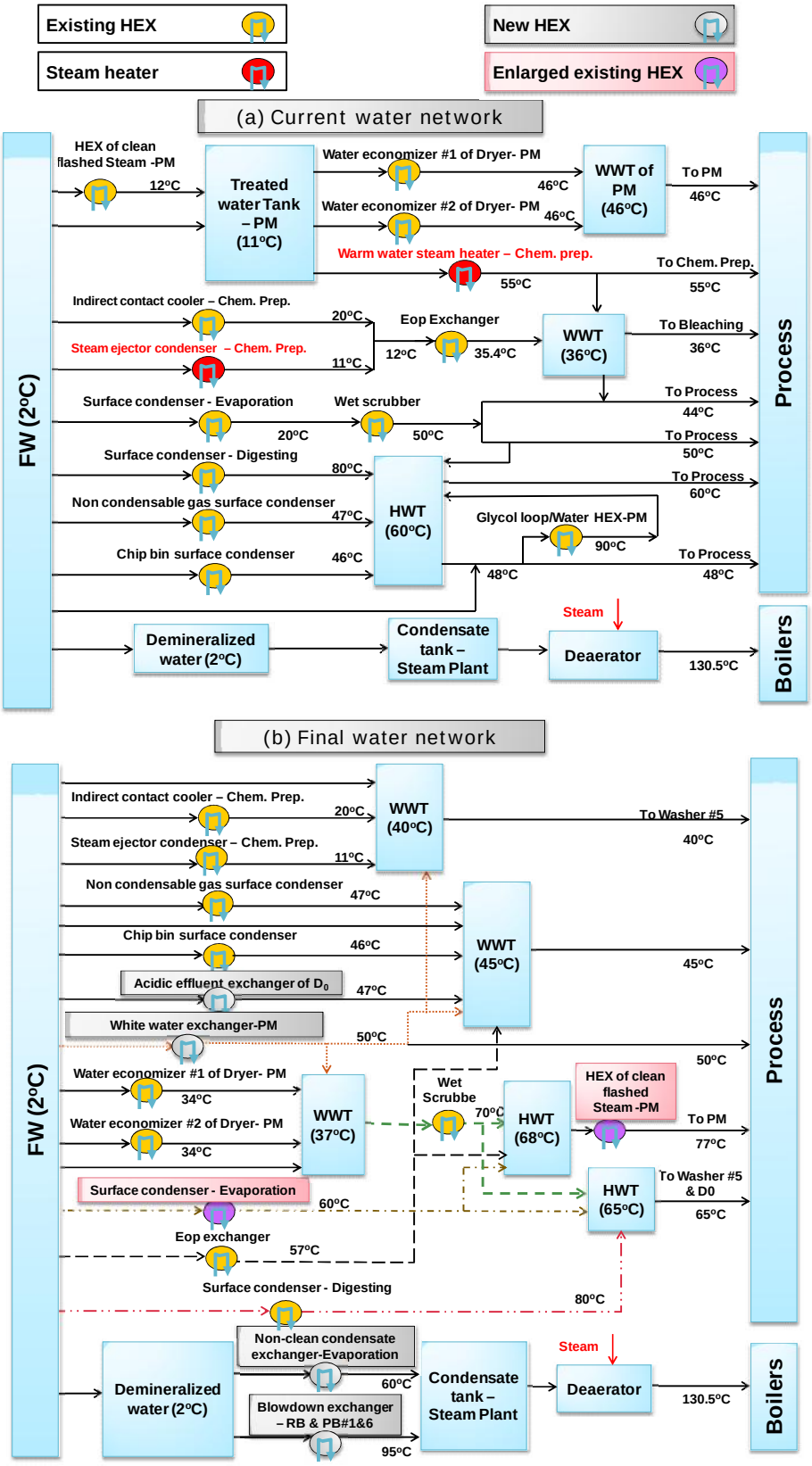

Fig. 7-15 - Current and final water production network after applying R-HEN (WWT: warm water tank, HWT: hot water tank, chem.. Prep.: chemical preparation, RB: recovery boiler, PB: power boiler)

Steam saving

It has been estimated in step 1 that steam can be saved at RHS-SH, FHexHS-SI, and RHS-NFHexHS-SI. Table 7-3 presents the current, estimated, and final steam consumption. The results show that at RHS-SH, the estimation was to replace the steam with other heat sources but in practice for 6 MW of steam at air heater-PM and air heater-RB, the goal cannot be achieved, however, the steam saving is still significant (16.3 MW). At the FHexHS-SI, the steam injection (10.6 MW) can be completely eliminated, as was estimated. At RHS-NFHexHS-SI, the steam injection can be reduced by 15.2 MW while the estimate was 15.7 MW, which is substantially close to the final result.

Table 7-4 displays the total steam requirement in the current HEX network, estimated using the targeting approach, and after the final network design. It also shows the estimated steam saving using the targeting approach and final steam saving after the final network design. The total steam saving is significantly high and accounts for 38% of current steam consumption of the mill. The results also show that the theoretical maximum steam saving (TMaxSS) is considerably close to the final steam saving (43 vs. 38%). It can be concluded that this technique yields a high steam saving and also gives an accurate estimation for steam saving at the early stage of the network design.

7.2.4 Step 4: Economic analysis

7.2.4.1 Cost of HEX

The area and the cost of new and enlarged HEXs are calculated and presented in Table 7-8. Table 7-8a summarizes nine new HEXs that should be purchased while Table 7-8b presents two existing HEXs that should be enlarged to more effectively recover the heat. The total new area requirement is 9850 m^2 to exchange 39.6 MW of heat. The new area entails 13.4 M$ of investment while it adds 335 k$/a (0.4 M$/a) to the operating costs of the mill.

Table 7-8 – New HEXs to be purchased and existing HEXs to be enlarged

#	Name of HEX	Heat exchanging (MW)	Area (m^2)	Installed cost (M$)
	(a) New HEXs			
1	2nd air economizer of dryer	0.5	384	0.42
2	3rd air economizer of dryer	1.8	1441	1.88
3	4th air economizer of dryer	1.8	1442	1.88
4	2nd air economizer of PB#1	1.0	961	1.16
5	Air economizer of PB#6	1.0	374	0.41
6	Acidic effluent exchanger-D0	6.3	1377	1.78
7	White water exchanger-PM	16.4	3141	5.06
8	Non-clean condensate exchanger-Evaporation	1.8	356	0.39
9	Blowdown exchanger –RB & PB#1 & 6	2.3	264	0.29
Total for new HEXs		**32.9**	**9740**	**13.27**
	(b) The enlarged existing HEXs			
1	Surface condenser – Evaporation	4.4	62	0.06
2	HEX of clean flashed steam - PM	2.3	49	0.7
Total for enlarged existing HEXs		**6.5**	**111**	**0.13**
TOTAL		***39.6***	***9850***	***13.4***

7.2.4.2 Profitability analysis

The saved steam (42.1 MW) can be used to eliminate natural gas consumption by shutting down PBs #2 and #3. The total natural gas saving is 4820 GJ/d. The following assumptions are used for profitability calculations:

1. The natural gas price is 6.0 $/GJ.
2. The number of operating days is 354 days (Browne et al., 2011).

All the costs and saving are summarized in Table 7-9. The natural gas saving is 10.3 M$/a while the new HEX requires 0.4 M$/a for new operating costs, which leads to 9.9 M$/a of extra net profit for the mill. This results in a significantly short payback period of 1.3a, which makes it extremely attractive for investment.

Table 7-9 – The economic analysis of steam saving and new area required

Steam saving (MW)	NG saving (GJ/d)	NG saving (M$/a)	Capital cost (M$)	New operating cost (M$/a)	Net profit (M$/a)	Payback period (a)
42.1 (38%)	4800	10.3	13.4	0.4	9.9	1.3

7.3 Pinch Analysis

Pinch analysis of the mill is also carried out to reveal the differences with R-HEN. It consists of the following steps:

- Data extraction
- Constructing Pinch Curves
    - Identification of MHR, maximum internal heat recovery, maximum steam saving
    - Identification of Pinch point
- Constructing existing HEX network
    - Identification of Pinch violation based on Pinch rules.
- Redesigning the HEN using Pinch rules
    - Dividing the problem into two parts; below and above the Pinch
    - Designing above and below the Pinch separately and the elimination of loops in the network
    - Elimination or reduction of Pinch violation
    - Proposition of new HEXs and enlargement in existing HEXs

7.3.1 Results of Application of Pinch Analysis

The data for Pinch analysis are presented in Table 7-10. The sinks are involved in all existing water and air requirements at different temperatures, all existing steam users, including steam heaters and steam injections. The sources include all liquid effluents, stack gases, and exhaust air.

Table 7-10 - The extracted data for Pinch Analysis

#	Stream	T_{in} (°C)	T_{out} (°C)	ΔH (kW)	Stream	T_{in} (°C)	T_{out} (°C)	ΔH (kW)
	Heat Sinks				**Heat Sources**			
1	Air to dryer100-PM	-10	100	5102	Non-clean steam- SC Digesting	111.4	25	2975
2	Air to RB	-10	169	4947	Non condensable gas-NCGSC	75	70	156
3	Air to PB#3	55	172	2219	Non condensable gas- Chip bin SC	75	70	665
4	Air to Dryer50-PM	-10	50	1668	Eop filtrate – Eop exchanger	67	25	5600
5	Air to PB#1 &6	55	210	5140	Exhaust air of Dryer - PM	75	0	22680
6	Air to PB#2	55	172	1695	Clean flashed steam-condenser-PM	95	93	2939
7	WW50	2	50	1723	Stack gas of RB- Wet scrubber	86	29	16790
8	WW44.4	2	44.4	18230	Non clean steam- SC Evaporation	74.6	25	10490
9	WW35.7	2	35.7	2417	Stack gas-PB#1	322	128.4	5140
10	HW61	2	61	19080	Stack gas-PB#2	234	70	2985
11	WW47.5	2	47.5	206	Stack gas-PB#3	145	70	1791
12	WW46	2	46	13980	Blowdown water-PB#1,2,3 &6	140.5	12	1722
13	WW55	2	55	20	Chemicals – Indirect contact cooler-Chem. Prep.	29.7	10.7	598
14	Liquor-upper heater of Digesting	152.7	160.5	2939	Steam& Chemicals – Steam ejectors condenser- Chem. Prep.	153.3	2.2	279
15	Liquor-Lower heater of digesting	160.6	169	1653	Deknotter rejects-Deknotter washer	59.9	12	105
16	Glycol-Steam HEX of glycol loop	130	133.7	5482	Overflow- filtrate tank washer #2	47.5	12	613
17	Green liquor – GL heater of recaust.	69.2	84	740	Non clean condensate of Evaporation	70.4	25	2175
18	NaClO3 –Steam heater#1-Chem. Prep.	42.3	85	43	Overflow-filtrate tank of washers #3&4	37.6	12	12030
19	Chemicals-Chemical reboiler-Chem. Prep.	71.3	73	1398	Reject of screeners-Washing	37.7	12	785
20	Dryer-PM	129.8	162	19260	Acidic effluent of D0-bleaching	49.9	25	5463
21	Evaporation	147.9	192.2	7615	Overflow-D1 filtrate tank	50.2	25	736
22	BL 42.6% -Cascade concentrator	77.8	120	14490	Overflow-filtrate tank of washer #5	47	12	2053
23	Boiler feed water to PB#1	130.5	135.4	133	Rejects of cleaners -PM	59.9	12	1333
24	Boiler feed water to PB#2	130.5	135.4	126	Overflow of white water tank-PM	60	12	32920
25	Boiler feed water to PB#3	130.5	135.4	233	Reject of Presses - PM	58.3	12	5740
26	Boiler feed water to PB#6	130.5	135.4	152	Sewer of Venturi oxygenator - Scrubber	66.9	25	310
27	Wood-Chip bin steam injection	2	92	4675	Blowdown of RB	190	12	1506
28	Wood-steaming vessel steam injection	92	143.2	4821	Stack gas-PB#6	135	70	972
29	Pulp-Washer #5 steam injection	45.2	45.5	208	Glycol-Air & Water heater of glycol loop-PM	133.7	130	5482
30	Pulp-D0 washer steam injection	43.4	49.1	1614	Stack gas of RB-Cascade concentrator of BL42.6%	250.3	125.4	14490
31	Pulp- Eop steam injection	49.5	95	4324	Blowdown water-PB#1	188.6	140.5	133
32	White water-Silo chest steam injection	58.3	60	9644	Blowdown water-PB#2	188.6	140.5	126
33	Boiler feed water-Deaerator steam injection	43.5	130.5	13930	Blowdown water-PB#3	188.6	140.5	233
34					Blowdown water-PB#6	188.6	140.5	152

Figure 7-16 illustrates the Pinch Curves of the mill. The Pinch point is located at 63.3°C and the minimum heating requirement (MHR) is 51.3 MW. The maximum potential of internal heat

recovery (MIHR) is 118.3 MW. According to MHR (51.3 MW) and the current steam consumption (112 MW), the maximum potential steam saving is 60.7 MW (54%).

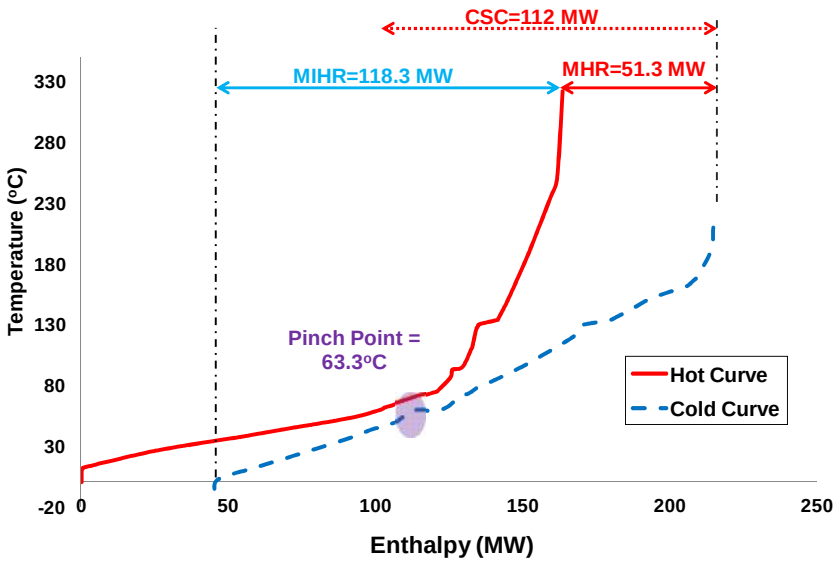

Fig. 7-16 – Pinch Curves of the mill

A part of the existing HEX network that undergoes modifications is displayed in Fig. 7-17a and 7-18a. The Pinch rules for HEN design are used to modify the existing HEXs. Figures 7-17b and 7-18b illustrate the modified HEX network for air preheating and the water production network based on Pinch Analysis. There are three types of Pinch violations in the existing network according to the Pinch rules: 7.9 MW steam injection below the Pinch point, 3.4 MW steam utilization at heaters below the Pinch point, and finally 19.9 MW cross Pinch heat recovery.

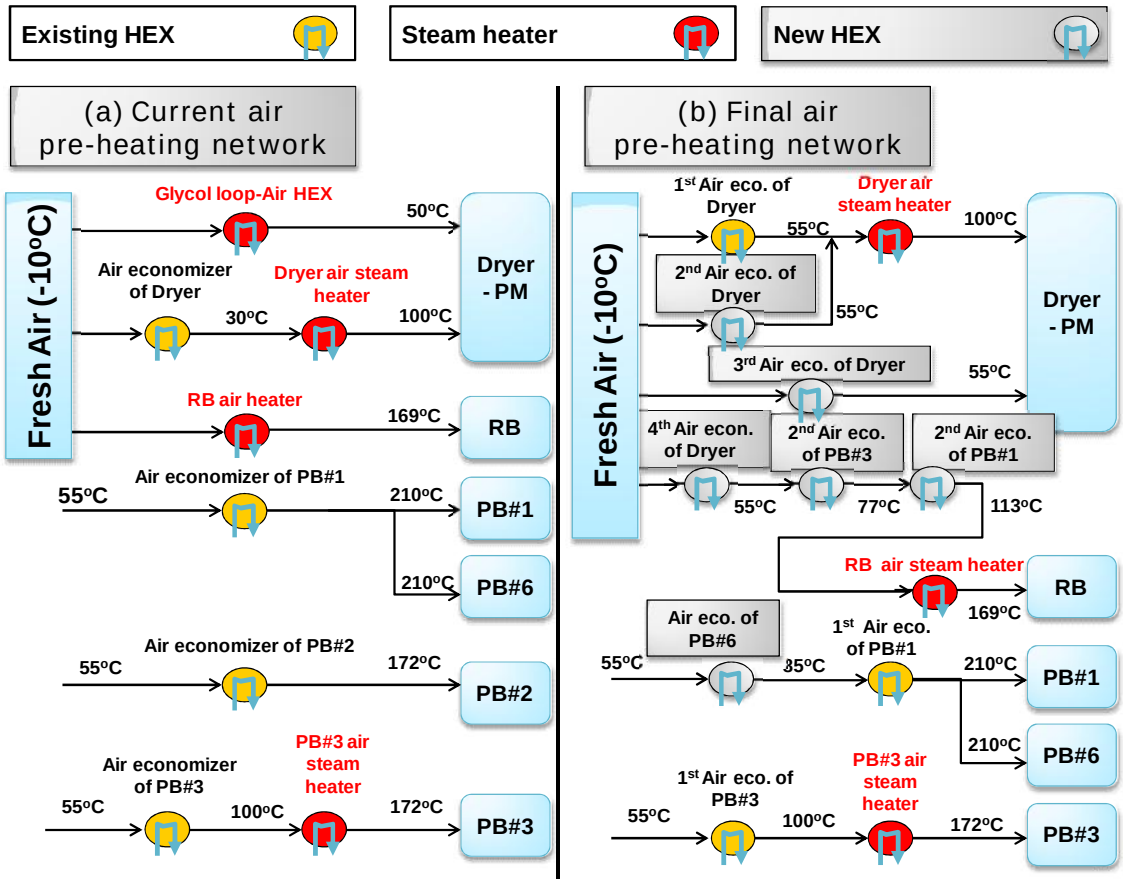

Fig. 7-17 – Current and final air pre-heating network after applying Pinch Analysis (RB: recovery boiler, PB: power boiler, PM: paper machine, eco.: economizer)

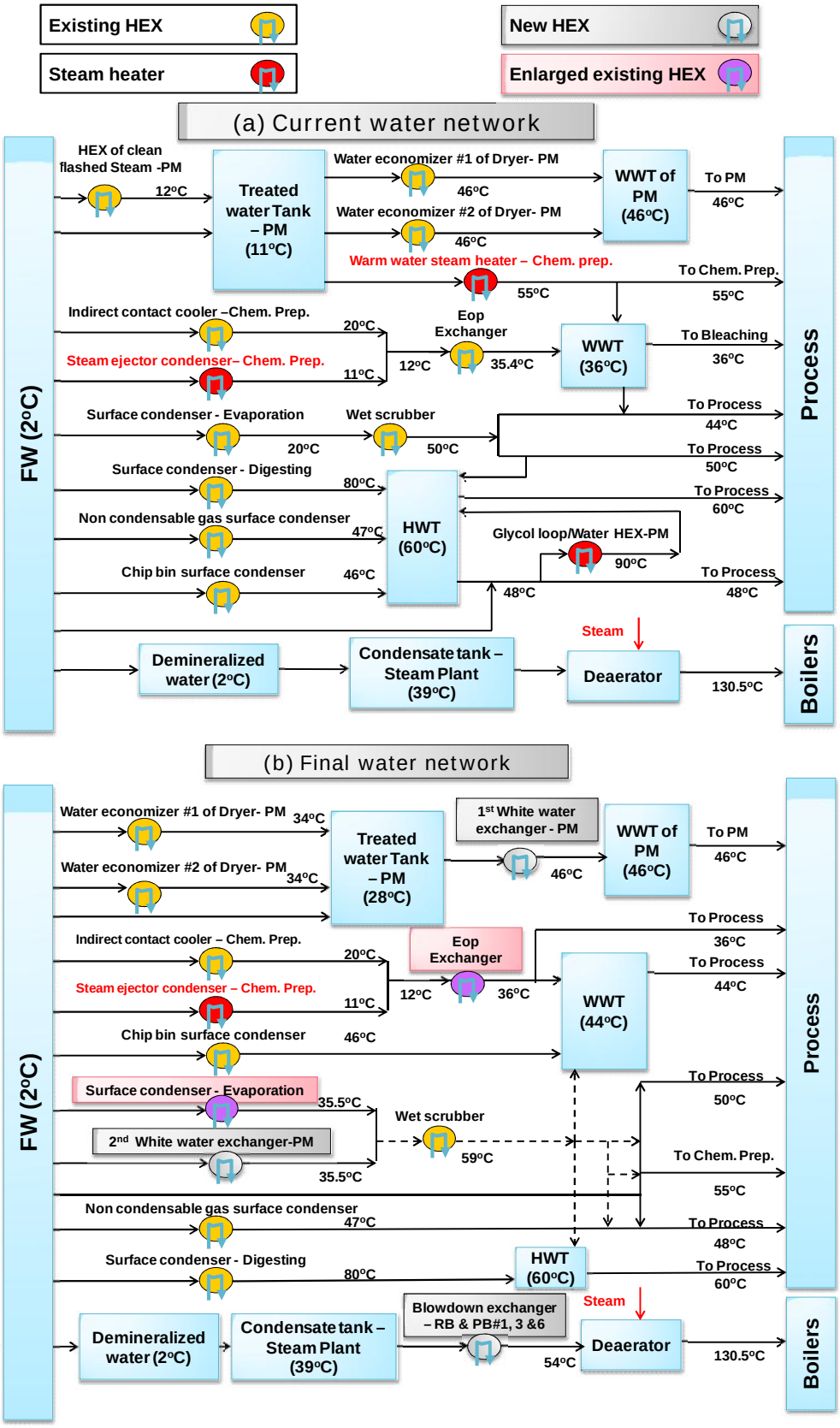

Fig. 7-18 - Current and final water production network after applying Pinch Analysis (WWT: warm water tank, HWT: hot water tank, chem.. Prep.: chemical preparation, RB: recovery boiler, PB: power boiler)

The Pinch violation due to steam injection below the Pinch point cannot be significantly corrected because, aside from the deaerator steam injection, the remainder of the heat sinks of these injections is pulp that cannot be directed to HEX. Therefore, except in the case of the deaerator (Fig. 7-18b) where the water can be directed to the HEX after the condensate tank and recover the heat before sending it to the deaerator, in the other cases, there is no possibility to reduce the Pinch violation. At these points, the Pinch violation is reduced from 7.9 to 6.0 MW.

The Pinch violation of steam heaters decreases considerably from 3.4 to 0.2 MW. The cross Pinch violation is also reduced from 19.9 to 15.6 MW. The reason for the small decrease in the Pinch violation is due to physical constraints. A large reduction in Pinch violations imposes many new HEXs that cannot be justified economically. In total, from the existing 31.2 MW of Pinch violations, 21.8 MW still remain after the final design. It is important to stress that in the retrofit HEX design due to physical and process constraints, there is not much freedom to make many modifications and eliminate all the Pinch violations.

The modified network requires purchasing nine new HEXs and the enlargement of the area of two existing HEXs. The total new area requirement is 8140 m^2 for the heat exchanging of 24.3 MW, which leads to 22.7 MW of steam saving. The steam saving of 20% is identical with the result of Pinch analyses that have been reported in the literature, including 15-17% of (AmericanProcess, 2010), 13% of (Mateos-Espejel et al., 2010d, 2011c), 15% of (Savulescu et al., 2005c), etc. Total installed cost of the new area is 10.1 M$ while it adds 252 k$/a (0.3 M$/a) to operating costs. The saved steam can be used to shut down the natural gas power boiler #2 (15.0 MW) and reduce the steam generation at the natural gas power boiler #3 (7.7 MW). This results in 2600 GJ/d of natural gas saving that can be translated to 6.5 M$/a of saving. The net profit after the deduction of the new operating costs of new HEXs is 6.2 M$/a while the payback period will be 1.6a.

7.4 Comparison of R-HEN with Pinch Analysis

The R-HEN and Pinch analysis are compared from two different perspectives: approach and results. From the approach point of view, R-HEN and Pinch Analysis is compared in Table 7-11.

Table 7-11 – Comparison between R-HEN and Pinch Analysis from the approach perspective

	R-HEN		**Pinch Analysis**	
Targeting	Requires only simulation of process and classification of steam users		Requires simulation of process, data extraction, constructing the Pinch Curves	
Required Data for HEN design	Less number of sinks: mainly water and air	For case study: 12 sinks	Sinks: all water and air, all steam users including steam injections and steam heaters	For case study: 33 sinks
Defining targeting temperature for water to reduce the effect of non-isothermal mixing steam injection respecting constraints	√		×	
Defining targeting temperature for air to enhance the efficiency of air users respecting constraints	√		×	
Advance evaluation of temperature of waste streams (main heat sources) using simulation of the process	√		×	
Practical and straightforward guidelines for HEN design	√		×	

The Pinch rules for HEN design sometimes restrict the potential for heat recovery and may result in oversized HEXs due to strictly adhering to the minimum allowable approach temperature ($\Delta T_{min}=10^{o}C$).

Pinch Analysis does not offer direct guidelines for choosing the connections between hot and cold streams. In Pinch Analysis, the HEN is designed for above and below the Pinch point and then the loops are eliminated while in R-HEN, there is no loop creation and elimination. Therefore, computation time and effort for HEN design is reduced.

From a results perspective, the total steam saving, the estimation of steam saving at the beginning (targeting), capital costs, net profit, and payback period of R-HEN and Pinch Analysis are compared. Figure 7-19 compares two methods in terms of steam saving and targeting. Figure 7-19a displays that the steam saving is almost twice as much for R-HEN compared to Pinch analysis. There can be two different reasons for this:

- One reason is the application of the first step of the R-HEN method where the constraints are analyzed and the new targeting temperature for water to the process is proposed to reduce the effect of non-isothermal mixing of steam. The new targeting temperature of air to the dryer and boilers is also defined

- The second is the utilization of practical rules for designing the HEX network in the third step of R-HEN rather than Pinch rules. Typically, the temperature of fresh air (-10°C) and water (2°C) as the main sinks in the water-based process is low. To preheat the air and produce warm or hot water by recovering the waste heat, cross Pinching is inevitable. Therefore, if the Pinch rules are intended to be respected, it would restrict the heat recovery.

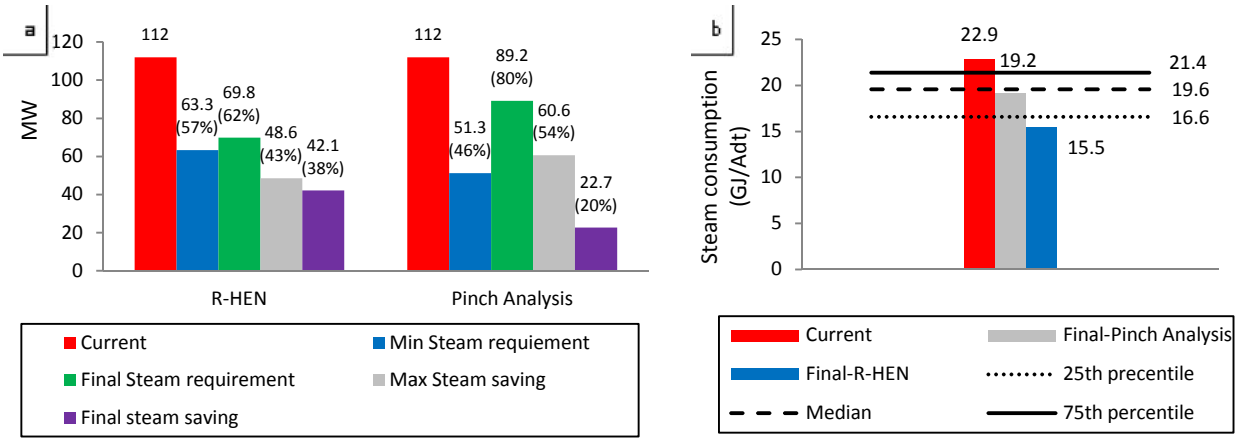

Fig. 7-19 – (a) Estimation and final steam requirement and steam saving by means of R-HEN and Pinch analysis, (b) benchmarking of steam consumption after applying both R-HEN and Pinch analysis

The targeting results show that the R-HEN estimates steam saving of 43% at the beginning while the final saving after redesigning the network is 38% (Fig. 7-19a). These two values are considerably close. Using Pinch Analysis, the targeting is 54% and the final saving is 20%, which are extremely far apart. Thus, it can be concluded that R-HEN suggests the more accurate estimation for steam saving at the beginning of the analysis compared to Pinch Analysis.

Figure 7-19b illustrates the steam consumption (GJ/Adt) for the current process and after applying two methods and benchmarks them against the steam consumption of the 25th percentile, the median, and 75th percentile of Canadian mills (CIPEC, 2008). The graph shows that using R-HEN, the steam consumption can be brought less than the 25th percentile of Canadian mills that are new mills or well-managed in terms of steam consumption. On the other hand, using Pinch analysis, it is only possible to bring this parameter close to the median Canadian mills. The result is still good, but it is not the best one.

The required capital cost for R-HEN is 13.4 M$ respecting the total steam saving, which is 42.1 MW (318 k$ capital cost/MW saving) and is much less than the one for Pinch analysis, which is 10.1 M$ respecting 22.7 MW steam saving (445 k$/MW). The higher steam saving of R-HEN also results in larger net profit (9.9 vs 6.2 M$) and a shorter payback period (1.3 vs 1.6a) compared to Pinch analysis.

7.5 Conclusion

The retrofit HEX network design (R-HEN) has been developed for water-based processes to improve the heat integration of the existing HEX network.

- This method requires a representative simulation of the process. It consists of four progressive steps.
- It analyzed the physical and process constraints, such as “hard” and “soft” temperatures of sensitive units in the process to avoid proposition of non-feasible projects.
- A targeting approach has been developed based on the constraints and also the classification of steam users to give a realistic estimation for steam saving in advance. The steam users are classified into five categories for this reason. This approach requires less data and effort to achieve an accurate targeting.
- Non-isothermal mixing (NIM) has been included in the method by defining the targeting temperature for water to the process to shift the heat load from steam injection to water.
- The waste streams have been classified to effectively exploit their available heat.
- R-HEN requires a lower number of sinks data for the HEN design. Mainly water and air sinks have been included in the data sheet.
- A systematic algorithm has been developed to perform retrofit HEN design using practical rules. It gave a direct guideline to choose the connections between hot and cold streams. The computation time and effort to design the HEN was reduced significantly.

The method has been applied on a Kraft pulp mill as a good example of water-based processes. The results showed that nine new HEXs should be purchased in both air and water networks and the area of two existing HEXs also should be increased. The total new area requirement and capital cost for this were 9850 m^2 and 13.4 M$, respectively. The revamped network led to a

considerably large steam saving of 42.1 MW that accounts for 38% of current steam consumption. The net profit of this steam saving was high (9.9 M$/a) and the payback period substantially short (1.3a).

Pinch Analysis has also been applied on the same case study. The results of both methods have been compared. The total steam saving of Pinch Analysis was 20%, which was significantly lower that the steam saving (38%) of R-HEN. The targeting results also showed that the R-HEN estimated a steam saving of 43% at the beginning and the final saving after redesigning the network was 38%, which were considerably close. Pinch analysis by means of Pinch Curves estimated to save 54% of steam while the final saving was 20%, which exposed a serious gap. The R-HEN yielded the high steam saving and also gave an accurate anticipation for steam saving at the early stage of the network design in comparison with Pinch Analysis. The comparison of required capital costs, net profit, and payback period also revealed the economic advantages of R-HEN over Pinch Analysis.

8 CAHPTER 8: STEAM AND WATER ANALYSIS ENHANCEMENT AND INTEGRATION METHODOLOGY

The objective of this chapter is to develop a steam and water analysis enhancement and integration (SWAEI) methodology to improve the water and thermal energy efficiency of water-based processes by combining different PI techniques. The simulation models of three mills (mill A, B, and C) were developed and used as a source of data for steam and water analyses. Applying the possible changes under the current conditions is also carried out in the simulation. The pre-benchmarking is conducted to diagnose the inefficiencies in water and steam systems. Simultaneous energy and water networks analysis (SEWNA), equipment performance analysis (EPA), and the retrofit HEX design network (R-HEN) are applied in sequence to identify the projects to enhance energy and water efficiencies. Some alternatives to use the excess steam are evaluated, including cogeneration, trigeneration and selling steam. A strategy is proposed to implement water and energy projects. The methodology has been demonstrated by applying it on three Canadian Kraft mills.

The chapter is organized in the following sections. SWAEI methodology and its steps are presented after which the detailed results of three mills are shown. The results of mill C are then compared with the results of applying stand alone SEWNA, EPA, or R-HEN on mill C. The results of all three mills are compared. Finally, the sensitivity analysis in the major parameters is conducted.

8.1 Steam and Water Analysis Enhancement and Integration (SWAEI) Methodology

SWAEI methodology is developed to enhance the water and thermal energy efficiency by combining different PI techniques to exploit their synergies.

Figure 8-1 demonstrates the structure of SWAEI methodology. It consists of six successive steps:

- Step 1: Development of base case and its process simulation as a source of data for analysis
- Step 2: Pre-benchmarking current performance to identify the area of inefficiencies
- Step 3: Identification of energy and water projects

- Step 4: Heat pumping and cogeneration
- Step 5: Draw a strategic guideline to implement the identified projects of steps 3 and 4 based on the economic parameters
- Step 6: Post-benchmarking to evaluate the overall efficiency improvements of water and steam systems

Each step will be elaborated in the next sections and the results will be presented.

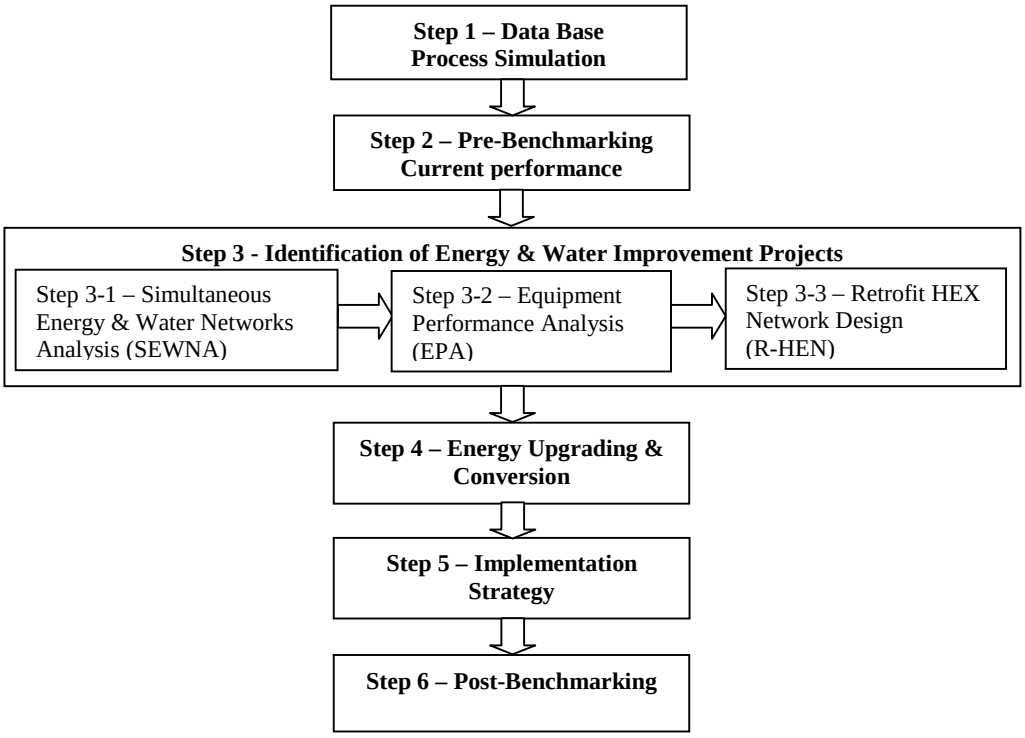

Fig. 8-1 – Steam and water analysis enhancement and integration (SWAEI) methodology

8.1.1 Step 1: Data Base and Process Simulation

The required data are collected and the simulation of process is developed on CADSIM Plus® software (Aurel Systems Inc) based on the methodology of Mateos et al. (2010c; 2011d). The simulation is used to extract data for analyses and apply proposed changes to evaluate the impact on the process.

8.1.2 Step 2: Benchmarking Current Performance

The current performance of the mill is benchmarked against current practices from two different perspectives:

- Steam consumption (GJ/Adt)
- Water consumption (m^3/Adt)

The steam consumption of the principal steam users and the complete mill is benchmarked against the reference data from the survey by the Pulp and Paper Research Institute of Canada (Paprican) (CIPEC, 2008). The water consumption is benchmarked against the published data for the average mills designed in the 1960s and 1980s (Johnston et al., 1996; Turner et al., 2001).

8.1.2.1 Scope of savings

A rule of thumb approach to calculate the scope of water (SWS) and steam savings (SSS) has been developed by analyzing the final results of the three case studies as follows:

$$SWS = \frac{CWC - RMWC}{CWC} \times 100 \qquad [1]$$

$$SSS = \frac{A\&WSS + I\&DSS}{TSC} \times 100 \qquad [2]$$

where CWC and RMWC denote current water consumption (m^3/Adt), and reference mills' water consumption (m^3/Adt), respectively. The scope of water saving can be assessed for the main departments (washing, bleaching, PM, recausticizng, and the steam plant) and then added together. It also can be evaluated for the whole mill, all at once, based on the total water consumption. TSC is the total steam consumption of the mill. Air and water heating steam saving, A&WSS, involves all steam for producing hot and warm water, heating the process and non-process air. Injection & Deaerator Steam Saving, I&DSS, represents the scope for steam saving at steam injection points and the deaerator in order to decrease the negative effects of non-isothermal mixing. Utilization of hot water rather than low temperature water at the pulp line and deaerator can significantly reduce the steam injection at the pulp line and steam consumption at the deaerator. To raise these temperatures, the heat exchanger network should be

upgraded to recover heat from the waste streams efficiently. By analyzing the final results of the mills, it is assumed that 70% of the steam at such points can be saved using this strategy.

These two generic formulas can be used to simply calculate the scope of steam and water savings with the least number of data.

8.1.3 Step 3: Identification of Energy and Water Projects

The identification of energy and water efficiency improvement projects is illustrated in Fig. 8-1 and comprises three process integration techniques that have been developed and presented in chapters 5, 6, and 7. The simultaneous energy and water networks analysis (SEWNA), equipment performance analysis (EPA), and retrofit HEX network design (R-HEN) of water-based processes are engaged as three progressive steps. These techniques should be performed in sequence in order to use their synergies and avoid counteraction.

8.1.3.1 Justification of the order

The HEX network should always be generated at the final step to ensure that there is no change in the streams that are included in the HEN design as cold and hot streams. Therefore, the SEWNA and EPA should be carried out before R-HEN.

The EPA could be before or after SEWNA. However, it is recommended herein to apply it after SEWNA, because if the water reutilization network is stabilized, evaluating the performance of some pieces of equipment that relate to the water network (e.g., washers, the evaporator, the recovery boiler, etc. in Kraft pulping) is more advantageous. For example, a change in the water reutilization network increases the concentration of weak black liquor sent to the evaporators and, subsequently, increases the total amount of black liquor sent to the recovery boiler. These changes will alter the performance of the evaporator trains and recovery boiler. Therefore, to avoid applying EPA twice (once before SEWNA and once after); it is more advantageous to apply it after SEWNA to ensure that the changes in the water network and performance of these pieces of equipment are taken into account.

8.1.4 Step 4: Energy Upgrading and Conversion

The excess steam of step 3 is first used to eliminate or reduce the fossil fuel consumption at the boilers. The usage of the remainder of excess steam is examined according to the four following alternatives:

- Alt. 1: cogeneration and selling electricity to the grid
- Alt. 2: trigeneration and selling electricity to the grid
- Alt. 3: selling steam to the local district, cogeneration, and selling electricity to the grid
- Alt. 4: selling steam to the local district, trigeneration, and selling electricity to the grid

These alternatives are compared based on different economic aspects, such as capital cost, net profit and payback period to select the most promising one.

The absorption heat pump (AHP) is an expensive device and, hence, the proposal to install one should be examined carefully. This device should be used when necessary, for instance, if there is a vast amount of heat that can be used to produce the LP steam (in trigeneration). The maximum heat recovery is achieved using R-HEN and it is not vital to recover and upgrade the low temperature heat using AHP. Therefore, the only option that is examined is trigeneration, which is a coupling of the AHP and cogeneration so as to save steam and increase the capacity for electricity generation.

8.1.4.1 Cost of Trigeneration

The total installed cost (M_T) of the back-pressure turbine (BPT) and condensing turbine (CT) is calculated based on the following generic formula (Cakembergh-Mas et al., 2010; Seider et al., 2009):

$$M_T\ (\$) = 1.3\ (1.18\ \times F_{BM}\ \times C_P) \qquad [3]$$

where the F_{BM} is the base module coefficient and for the steam turbine has been fixed at 3.5 (Cakembergh-Mas et al., 2010) and $C_{P,}$ which is the purchasing cost of the turbine, is calculated based on the Sieder et al. (2009) approach and costs are indexed to 2012. The total operating cost of the turbine includes maintenance and the operating supplies. The maintenance is assumed to

be $0.0054/kWhr (DellChallenge, 2013) and operating supplies are approximately 0.5% of the total installed cost of the turbine (Peters et al., 2002).

The total installed cost of the absorption heat pump (AHP) is 610 $/kW (for 2012) times the generator heat load for the single-stage (Bakhtiari et al., 2010a). Maintenance and repairs are estimated at 2% and operating supplies are 0.5% of the total installed cost of AHP (Peters et al., 2002).

8.1.5 Step 5: Implementation Strategy

A two-phase strategy is proposed to effectively and economically prioritize and implement the identified projects of steps 3 and 4:

- Elimination or reduction of fossil fuel
- Electricity generation and/or selling steam to local district

The economic parameters to calculate the profitability are individuals for each case. All prices are in 2012 Canadian dollars.

8.1.6 Step 6: Post-benchmarking

Similar to pre-benchmarking, a post-benchmarking is carried out to quantify the improvement of water and steam efficiencies. In addition, the final steam and water savings are compared with the results of the “scope of saving” to identify the accuracy and effectiveness of the “scope of saving”.

Results

Detailed results for the three mills are presented in the following sections.

8.2 Mill A

8.2.1 Step 2: Pre-benchmarking with current practice

Figure 8-2 and 8-3 illustrate the results of pre-benchmarking. The steam consumption of mill A is benchmarked against the data for Kraft *paper* pulp with a batch digester due to the lack of data

for benchmarking against *dissolving* Kraft pulp with a batch digester. The principal difference between *dissolving* and Kraft *paper* pulp is that there is an extra step before digesting, called pre-hydrolysis, to separate the hemicelluloses. Therefore, it is possible to divide the mill into two parts for benchmarking: the pre-hydrolysis and the Kraft *paper* pulp with batch digester. Figure 8-2 shows that the steam consumption of evaporation is higher than the 75th percentile of Canadian mills because of the nature of dissolving in the Kraft process. In this process, the separated hemicelluloses from the pre-hydrolysis step are mixed with the weak black liquor from the washing department (Fig. 3-15), so the total quantity of black liquor increases. This causes the large steam consumption compared to evaporation of Kraft *paper* mills, which just receives the black liquor from the washing section. In the other parts of the mill, such as the steam plant, water production, recausticizing, and building heating, the total steam consumption is considerably higher than the 75th percentile of Canadian mills. The steam consumption of the portion of Kraft *paper* pulp with batch digester is also much higher than even the 75th percentile of Canadian mills. This shows the big opportunities to save steam at this mill.

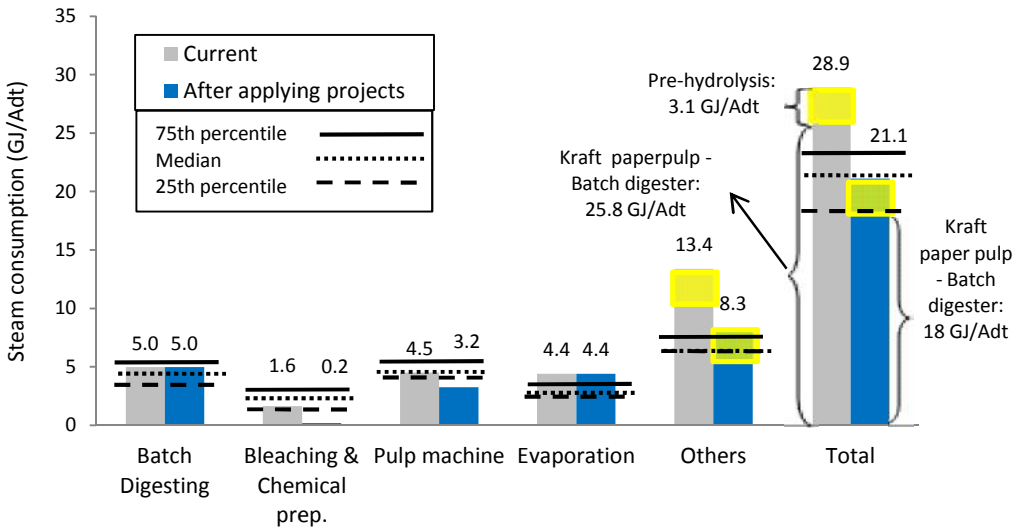

Fig. 8-2 - Steam consumption of main departments and complete mill – current and after applying projects - Mill A

Figure 8-3 displays the area of large water consumption in comparison with reference data. Washing, the pulp machine (PM), and recausticizing consume a significant amount of water

compared to both mills designed in the 1960s and 1980s. These give a good opportunity for improvement in the water system.

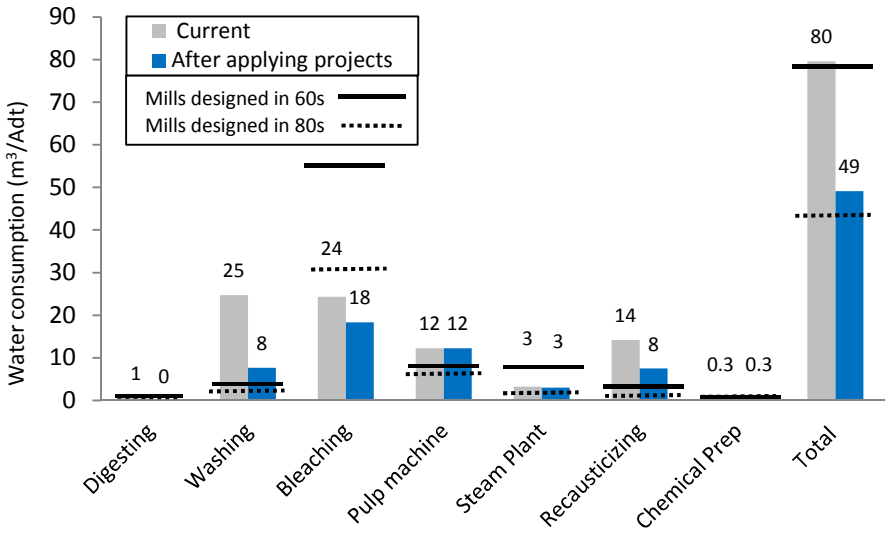

Fig. 8-3 - Water consumption – current and after applying projects - Mill A

Based on the Eqs [1] and [2], the scope for steam and water savings are 33% and 44%, respectively.

8.2.2 Changes in Water Reutilization Network (Step 3-1: SEWNA)

The Water & Energy Pinch curves for all sinks and sources are constructed in Fig. 8-4. Figure 8-4a shows the raw data before reutilization, while Fig. 8-4b illustrates the final results after water reutilization.

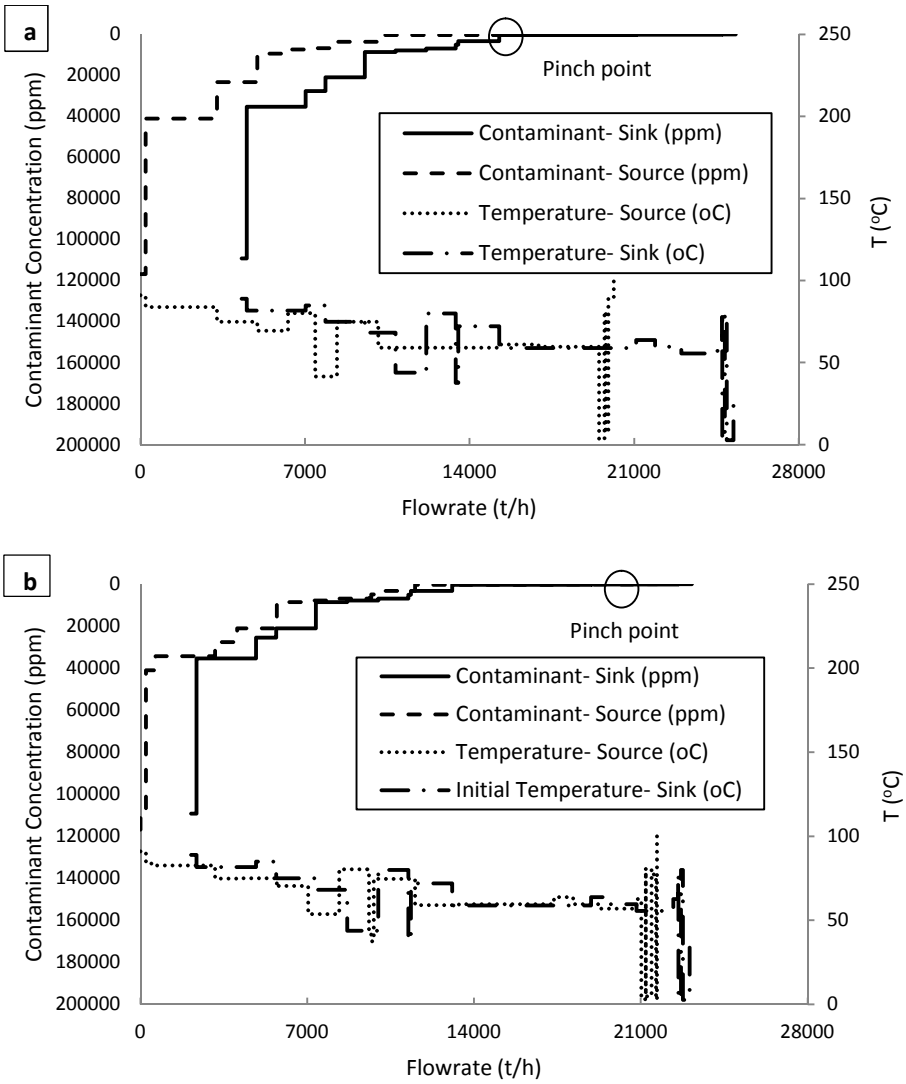

Fig. 8-4 - Water & Energy Pinch Curves, (a) before water reutilization, (b) after water reutilization – Mill A

The final changes in water utilization and filtrate reutilization of the whole mill are demonstrated in Fig. 8-5b to 8-7b. Dashed purple lines show the change in the flowrate of the existing connection and the dotted red lines show the new connections. The total number of changes that is carried out in the flowrate of existing connections is 16 while 22 new connections for filtrate reutilization should be implemented. Total water savings is 948 m^3/h that accounts for 38% of current water consumption. The total effluent decreases by 893 m^3/h or 36% of current effluent production.

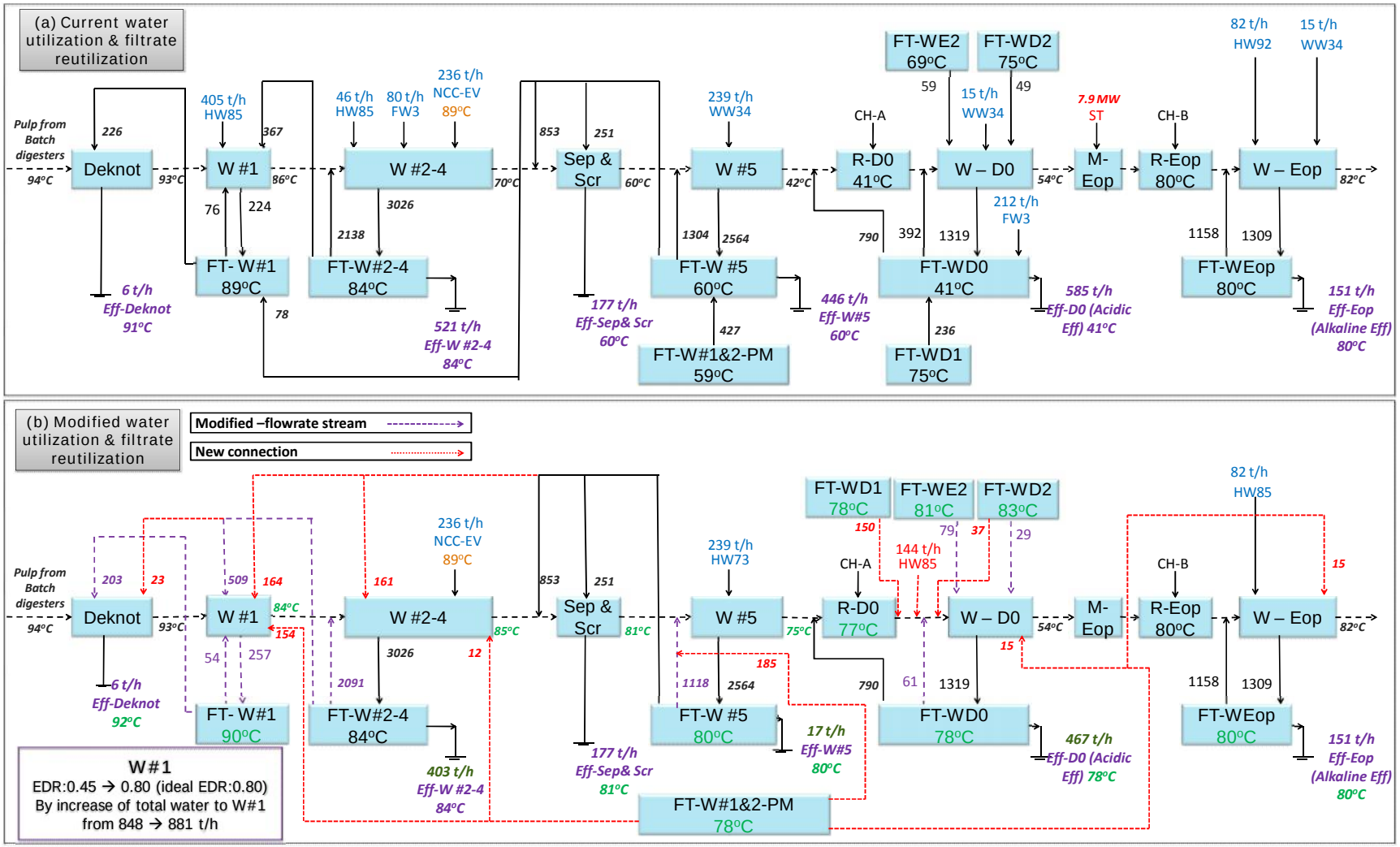

Fig. 8-5 - (a) current, (b) final water utilization and filtrate reutilization in washing and bleaching departments – Mill A; dotted red lines: new connections; dashed purple lines: the existing connections with change in flowrate (W: washer, FT: filtrate tank, Sep & Scr.: separators and screeners, Deknot: deknotters, R: reactor, M: steam mixer, PM: pulp machine, ST: steam, NCC-EV: non-clean condensate of evaporation, WW: warm water: FW: fresh water: HW: hot water, Eff.: effluent)

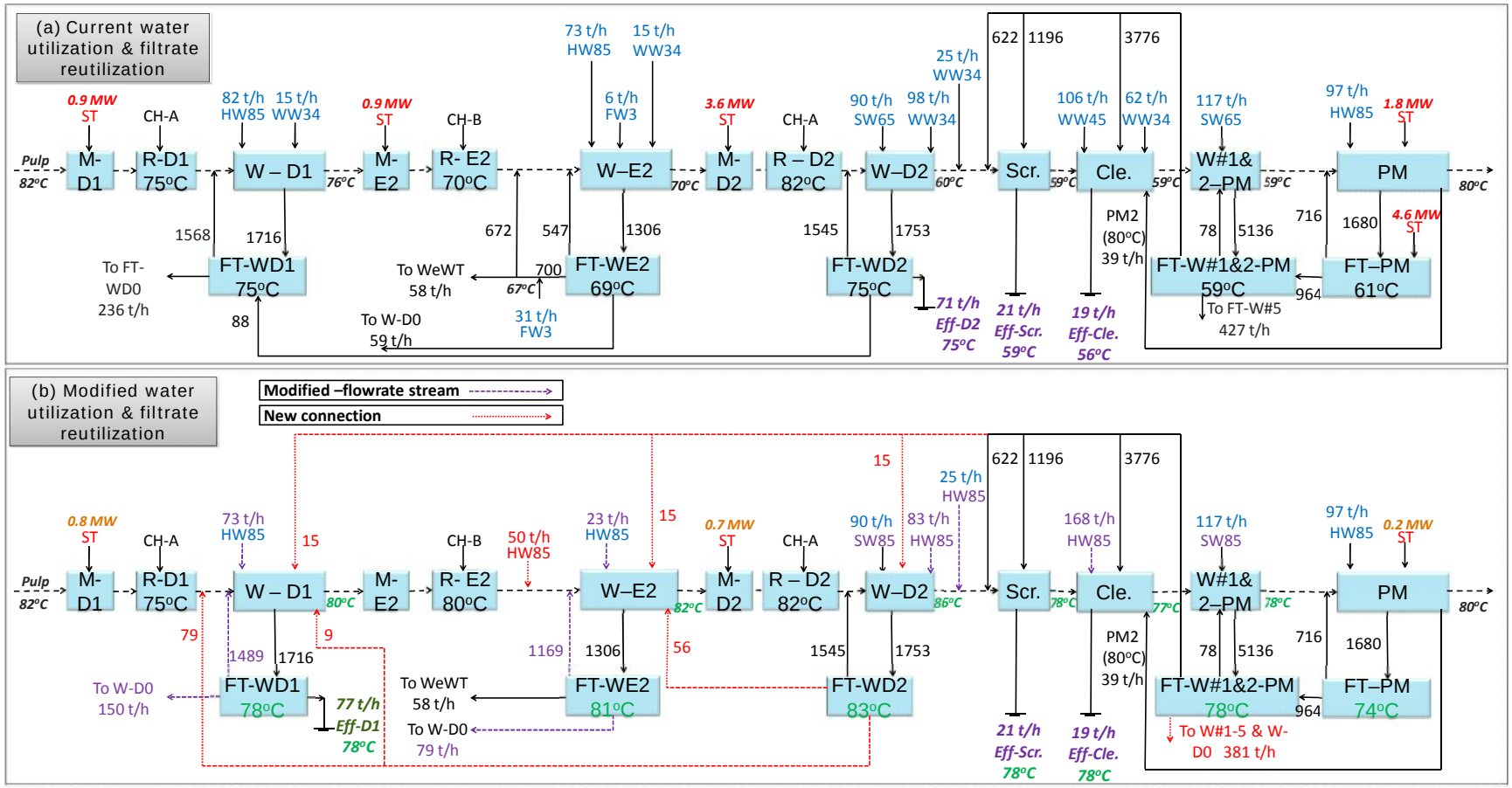

Fig. 8-6 - (a) Current, (b) final water utilization and filtrate reutilization in bleaching and pulp machine departments – Mill A; dotted red lines: new connections; dashed purple lines: the existing connections with change in flowrate (W: washer, R: reactor; M: steam mixer, FT: filtrate tank, Cle.: cleaners, Scr.: screeners, PM: pulp machine, Vac. P: vacuum pump, Fil: filter, WW: warm water: FW: fresh water: HW: hot water, CH-A: acidic chemicals, CH-B: base chemicals, ST: steam, Eff.: effluent)

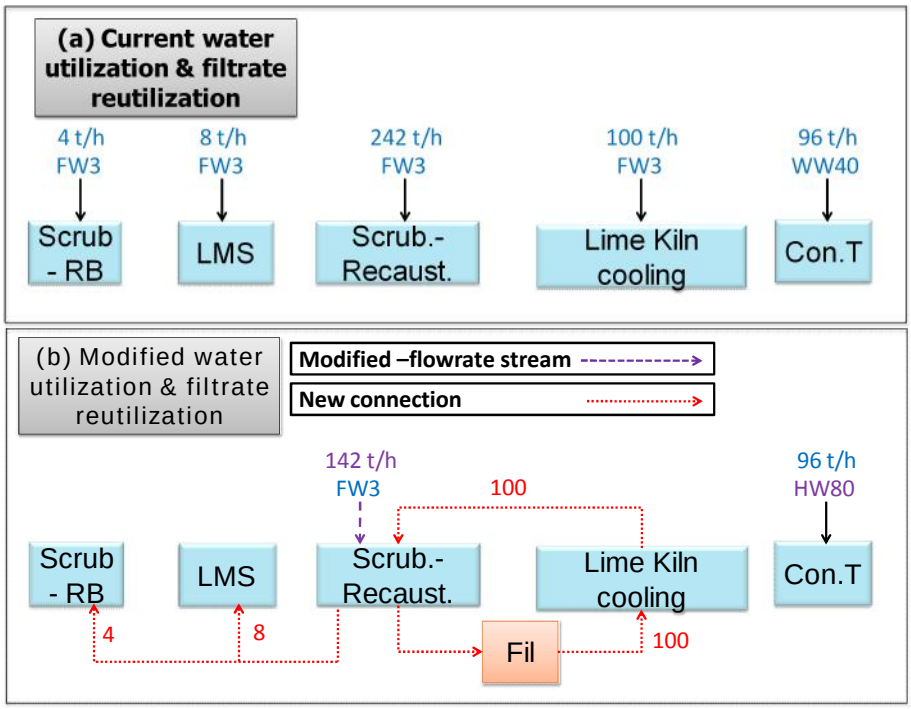

Fig. 8-7 - (a) current, (b) final water utilization and filtrate reutilization in scrubber, recausticizing, and steam plant department, - Mill A; dotted red lines: new connections; dashed purple lines: the existing connections with change in flowrate (Scrub-RB: scrubber of recovery boiler, LMS: lime mud storage, Scrub-Recaust.: Scrubber of recauticizing, Con. T: condensate tank, Fil: filter)

8.2.3 Synthesis of the performance improvement projects (Step 3-2: EPA)

There is only one performance improvement project at washer #1 as shown in Fig. 8-5b. The EDR of the washer is 0.46, which is considerably smaller than the ideal one (0.80). To resolve this and improve the performance of the washer, total filtrate to this washer increases from 848 to 881 t/h.

8.2.4 HEX network changes (Step 3-3: R-HEN)

8.2.4.1 Targeting

The steam consumption of the current condition, after applying SEWNA and EPA, and also after performing the targeting stages for five different categories of steam users is presented in Table 8-1. The results show that eight NRHS-SH heaters (Table 8-1a) consume 114.4 MW of steam and cannot be replaced by other heat sources. However, by targeting the new temperature of air to the dryers, the steam can be reduced to 111.8 MW. There are seven RHS-SH heaters (Table 8-1b) where the steam has been reduced from 57.8 to 55.0 MW using SEWNA and the

remainder can also be replaced by other heat sources. In the case of steam injection points, there are four FHexHS-SI (Table 8-1c) that were completely eliminated using SEWNA (11.9 MW). At the four NRHS-NFHexHS-SI points (Table 8-1d), the steam consumption cannot be reduced using the HEN design. The total number of RHS-NFHexHS-SI points is seven (Table 8-1d) and steam has been decreased from 30.1 to 16.5 MW using SEWNA. It can potentially be declined to 12.0 MW by targeting the new temperature for water to the pulp line.

Table 8-1 - The steam consumption of the current situation, after applying SEWNA, EPA and also the potential for steam reduction using R-HEN and final steam consumption after HEX network design for all steam users of the mill – Mill A

#	Equipment	Current (MW)	After SEWNA (MW)	After EPA (MW)	Potential using R-HEN (MW)	Final after HEX network design (MW)
(a) Non-Replaceable Heat Source-Steam Heater (NRHS-SH)						
1	Cooking liquor #1 – Digesting	19.0	19.0	19.0	19.0	19.0
2	Cooking liquor #2 – Digesting	19.0	19.0	19.0	19.0	19.0
3	Cooking liquor #3 – Digesting	2.5	2.5	2.5	2.5	2.5
4	Cooking liquor #4 – Digesting	2.4	2.4	2.4	2.4	2.4
5	Oil heater – Steam Plant	3.0	3.0	3.0	3.0	3.0
6	Dryer #1 - PM	15.9	15.9	15.9	14.8	14.8
7	Dryer #2 - PM	14.5	14.5	14.5	13.0	13.0
8	Evaporation	38.1	38.1	38.1	38.1	38.1
Total NRHS-SH		***114.4***	***114.4***	***114.4***	***111.8***	***111.8***
(b) Replaceable Heat Source – Steam Heater (RHS-SH)						
1	Air heater – Buildings, Dryers & RB	23.9	23.9	23.9	0	0
2	MP steam air heater –RB	8.7	8.7	8.7	0	6.2
3	HP steam air heater – RB	9.6	9.6	9.6	0	6.9
4	HP steam air heater – PB	3.0	3.0	3.0	0	0
5	Black liquor heater – Steam plant	9.8	9.8	9.8	0	9.8
6	Heater of hot water 85°C production	1.1	0	0	0	0
7	Heater of soft water 65°C production	1.7	0	0	0	0
Total RHS- SH		***57.8***	***55.0***	***55.0***	***0***	***22.9***
(c) Feasible HEX Heat Sink – Steam Injection (FHexHS-SI)						
1	Filtrate tank of pulp machine - PM	4.6	0	0	0	0
2	Hot water tank – Recausticizing	5.0	0	0	0	0
3	Hot water 71°C production	0.2	0	0	0	0
4	Hot water 92°C production	0.8	0	0	0	0
5	Soft water 65°C production	1.3	0	0	0	0
Total FHexHS-SI		***11.9***	***0***	***0***	***0***	***0***
(d)Non-Reducible Heat Source– Non-Feasible HEX Heat Sink – Steam Injection (NRHS-NFHexHS-SI)						
1	Pre-hydrolysis – Digester (MP)	10.1	10.1	10.1	10.1	10.1
2	Pre-hydrolysis – Digester (LP)	16.9	16.9	16.9	16.9	16.9
3	Water treatment	0.1	0.1	0.1	0.1	0.1
4	Steam plant	8.6	8.6	8.6	8.6	8.6
Total NRHS-NFHexHS-SI		***35.7***	***35.7***	***35.7***	***35.7***	***35.7***
(e)Reducible Heat Source– Non-Feasible HEX Heat Sink – Steam Injection (RHS-NFHexHS-SI)						
1	Eop steam mixer – Bleaching	7.9	2.0	2.0	0	0
2	D1 steam mixer - Bleaching	0.9	1.2	1.2	0.8	0.8
3	E2 steam mixer – Bleaching	0.9	0.4	0.4	0	0
4	D2 steam mixer - Bleaching	3.6	1.2	1.2	0.7	0.7
5	Steam mixer of pulp machine	0.8	0.4	0.4	0	0
6	Lazy steam shower of pulp machine	1.0	1.0	1.0	0.2	0.2
7	Deaerator – Steam Plant	15.0	10.3	10.3	10.3	10.3
Total NRHS-NFHexHS-SI		***30.1***	***16.5***	***16.5***	***12.0***	***12.0***

Table 8-2 presents the aggregate results of the theoretical minimum steam requirement (TMinSR) and theoretical maximum steam saving (TMaxSS) for all five categories as well as the complete mill. The results suggest that by applying SEWNA and EPA, 11% of current steam consumption has already been saved and 25% can also potentially be saved by means of R-HEN while at least 64% of current steam consumption is necessary and should be used by current steam users.

Table 8-2 - The aggregation of all types of steam users for the current situation after applying NSWEA and EPA plus the targeting and final steam saving by means of R-HEN – Mill A

#	Type of steam user		Current (MW)	After SEWNA (MW)	After EPA (MW)	TMinSR* using R-HEN (MW)	Final SR after HEX network design (MW)	TMaxSS† using R-HEN (MW)	Final SS using HEX network design (MW)
1	Steam	NRHS-SH	114.4	114.4	114.4	111.8	111.8	2.6	2.6
2	heater	RHS-SH	57.8	55.0	55.0	0	22.9	55.0	32.1
3	Steam	FHexHS-SI	11.9	0	0	0	0	0	0
4	injectio	NRHS-NFHexHS-SI	35.7	35.7	35.7	35.7	35.7	0	0
5	n	RHS-NFHexHS-SI	30.1	16.5	16.5	12.0	12.0	4.5	4.5
Total (MW)			***249.9***	***221.6***	***221.6***	***159.5***	***182.4***	***62.1***	***39.2***
Percentage over current consumption			***-***	***89%***	***89%***	***64%***	***73%***	***25%***	***16%***

*TMinSR: Theoretical Minimum Steam Requirement
†TMaxSS: Theoretical Maximum Steam Saving

8.2.4.2 HEX network

A part of the existing HEX network that undergoes the modifications is displayed in Fig. 8-8a and 8-9a. The existing HEX network consists of the air and black liquor (BL) preheating and warm/hot water production networks using the process stream HEXs and the air and water heaters. Figure 8-8b and 8-9b illustrate the final HEX network after applying the HEN design algorithm.

Figure 8-8b shows the new HEN to pre-heat the air and BL for boilers and the dryer. The total new HEXs that should be purchased are five condensers at the condensing turbine, one HEX to condense the clean flashed steam of the dryer, and one new air economizer at the recovery boiler (RB) and one at the power boiler (2nd air economizer of PB). There is also one relocated HEX (1st condenser of condensing turbine) that is currently used as the air heater for buildings, dryers, and RB. The current high pressure steam air heater of the power boiler (PB) should be relocated

and enlarged to be employed as the second HEX to condense the clean flashed steam of the dryer. The existing cascade concentrator of black liquor should also be enlarged.

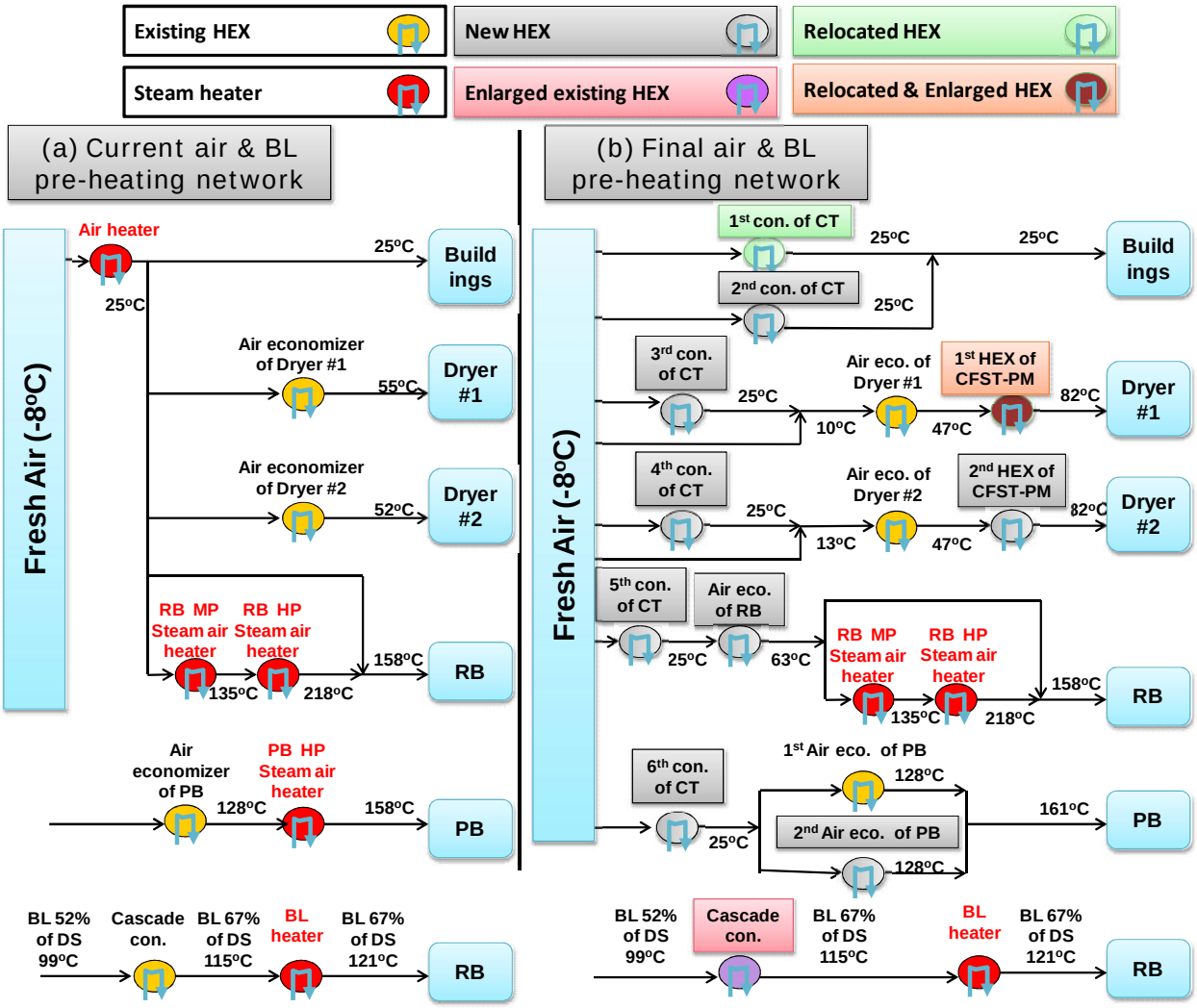

Fig. 8-8 - (a) Current and (b) final air and black liquor (BL) pre-heating network after applying SWAEI methodology – Mill A (RB: recovery boiler, PB: power boiler, PM: pulp machine, eco.: economizer, MP: medium pressure, HP: high pressure, cascade con.: cascade concentrator, DS: dissolved solid, CFST: clean flashed steam of dryer, con. Condenser)

Figure 8-9b illustrates the new HEN for the warm/hot water production network. The total new HEXs for the water production network are six while the area of two existing HEXs should be increased. The new temperatures of hot and warm water have been incorporated in water utilization network of Fig. 8-5b to 8-7b.

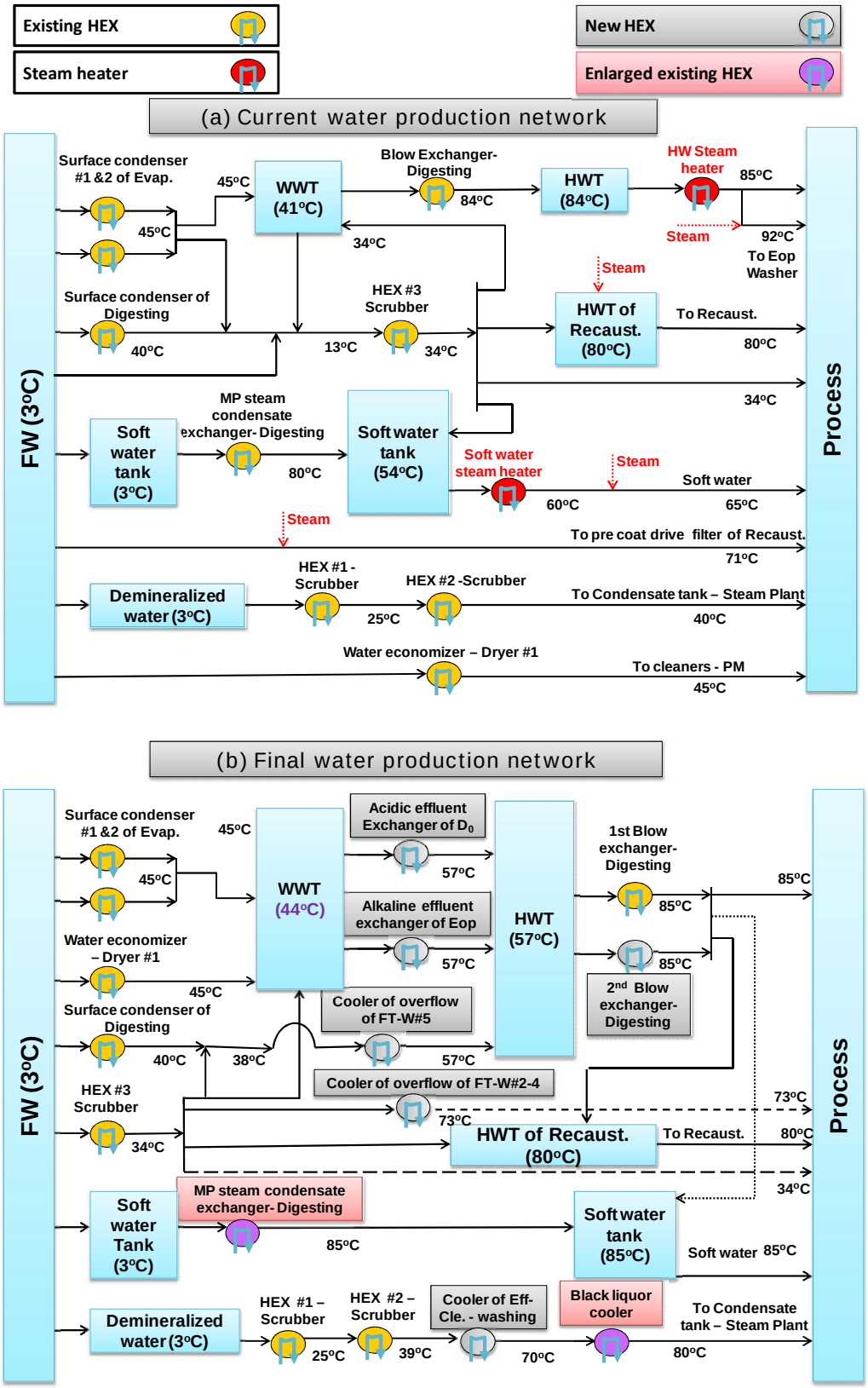

Fig. 8-9 - (a) Current and (b) final water production network after applying SWAEI methodology – Mill A (WWT: warm water tank, HWT: hot water tank, RB: recovery boiler, PB: power boiler, Eff-Cle.: effluent of cleaners)

8.2.4.3 Steam saving

Table 8-1 presents the final steam consumption for all five categories of steam users. The results show that at NRHS-SH and RHS-NFHexHS-SI, the anticipated steam saving has been accomplished whereas at RHS-SH, the estimation was to replace the steam with other heat sources but in practice for 22.9 MW of steam at the air heaters of RB and black liquor heater (Fig. 8-8b), the goal cannot be achieved; however, the steam saving is still significant (32.1 MW).

Table 8-2 displays the final steam requirement and saving after HEX network design. The total steam saving using R-HEN is large and accounts for 16% of current steam consumption of the mill. The saving when it is added to one that has been achieved by SEWNA (11%) comes to 27% of current steam consumption, which is considerably large. The results also show that the theoretical maximum steam saving (TMaxSS) is close to the final steam saving (25 vs. 16%).

8.2.5 Summary of improvements

Table 8-3 presents the total number of projects and steam and water savings. In addition, capital cost requirements for piping in the water network from the SEWNA and installation of the new HEX area by means of R-HEN are shown. The operating cost related to the new HEX area is also calculated. Steam saving is 67.5 MW that accounts for 27% of current steam consumption. The total water saving is 948 m^3/h or 38% of current water consumption. These 34 projects entail 25.18 M$ in capital costs and adds 546 k$/a (0.55 M$/a) to the operating costs of the mill.

Table 8-3 – Summary of improvements after applying SWAEI methodology – Mill A

Step of Methodology	Number of projects	Steam saving		Water saving		Capital cost	Operating cost
		MW	%	m^3/h	%	M$	k$/a
SEWNA	15	28.3	11	948	38	3.36	-
EPA	-	-	-	-	-	-	-
R-HEN	19	39.2	20	-	-	21.82	546
Total	**34**	**67.5**	**27%**	**948**	**38%**	**25.18**	**661**

8.2.6 Step 4: Energy Upgrading and Conversion

This mill currently has two back pressure turbines that produce medium (MP) and low (LP) pressure steam and 19.7 MW of electricity (Fig. 8-10a). In total, 257 MW of steam at different levels is consumed at the process and 18.3 MW of energy is lost in turbines.

The saved steam is used to reduce the bunker oil consumption at the power boiler. This leads to a reduction of 20.0 MW of high pressure (HP) steam generation. The remainder of saved steam is 47.5 MW, which is not sufficient for exportation and, hence, two alternatives involving selling steam to the local district are excluded from the study for this mill. Therefore, the two other alternatives, including cogeneration only and trigeneration and selling electricity to the grid are examined and illustrated in Fig. 8-10b and c.

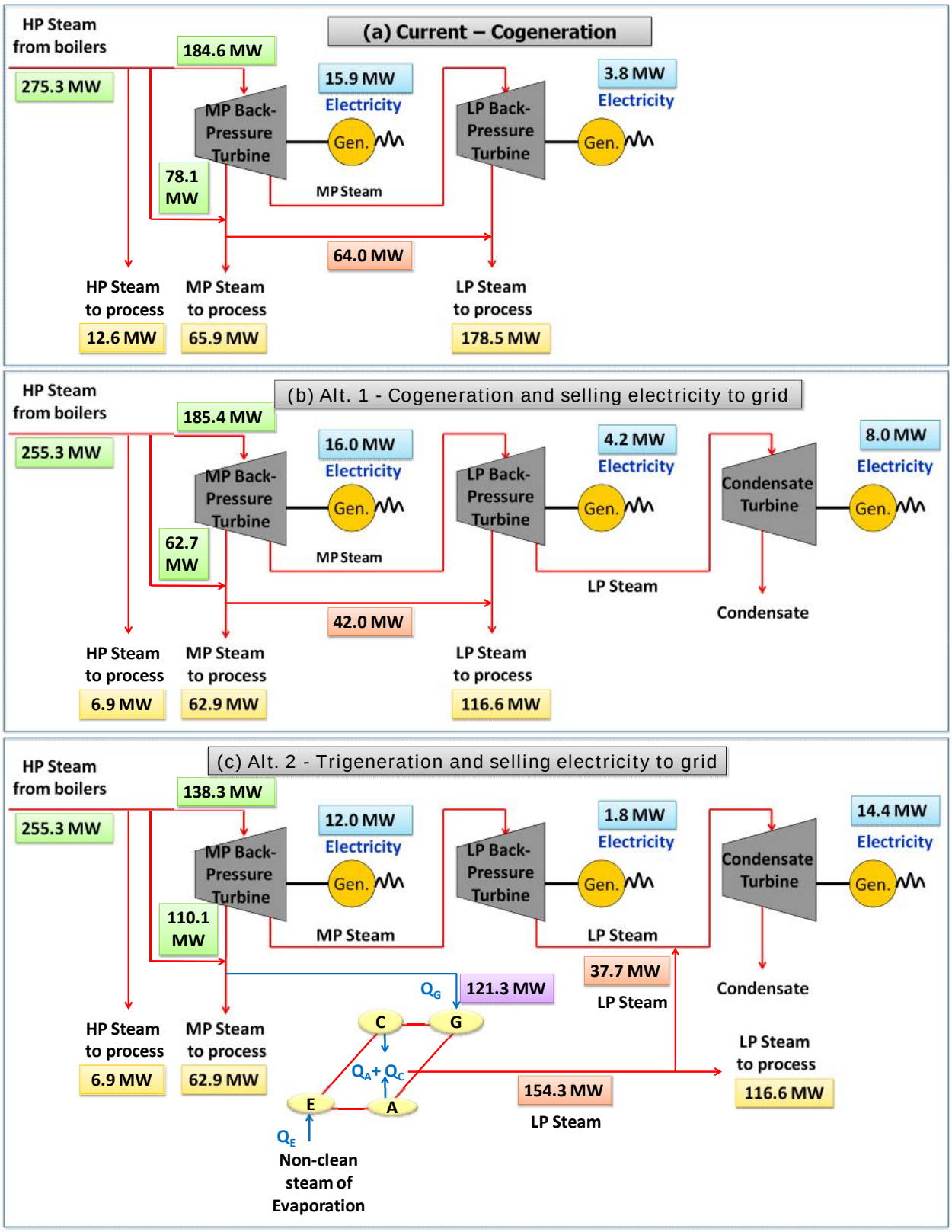

Fig. 8-10 - (a)Current cogeneration, (b) Alt. 1, (c) Alt. 2 – Mill A (G: generator, C: condenser, A: absorber, E, evaporator, Gen.: turbine generator)

In Alt. 1 (Fig. 8-10b) by installation of a condensing turbine, 8.5 MW of extra electricity can be generated.

There is only one source of non-clean steam (Fig. 8-10c) that can be utilized at the evaporator (E) of LiBr/H_2O AHP with the coefficient of performance (COP) of 1.55 (Marinova et al., 2007) and generate low pressure (LP) steam at the absorber (A) and condenser (C). This non-clean steam is currently condensed at surface condensers #1 and 2 of evaporation to produce warm water (Fig. 8-9). Therefore, to produce this warm water, the adjustment to replace the non-clean steam with other heat sources in the HEX network is considered. The MP steam (121.3 MW) from the MP back pressure turbine is used as the heat deriver at the generator (G) of AHP and in total can save 33 MW (13%) of steam consumption. However, this excess saving does not result in extra electricity generation in comparison to Alt. 1 (28.2 vs. 28.2 MW). The reason for no further electricity generation is that the HP steam is used to produce MP steam rather than being introduced to the MP back pressure turbine. In addition, a large quantity of MP steam is used to upgrade the heat at AHP, and the quantity of steam going toward the LP back pressure turbine is also reduced.

The Alt. 1 is more attractive for implementation. The economic aspects of both alternatives are, however, presented in the next section. The total capital cost of Alt. 1 is 8.03 M$ to purchase a new condensing turbine with 431 k$/a of operating costs while the capital cost of cogenerations and AHP of Alt. 2 are respectively 10.95 and 60.12 M$ and add around 2.2 M$/a in operating costs.

8.2.7 Economic analysis of the two alternatives

As mentioned earlier, the saved steam of 67.5 MW can be used to reduce 52 t/d of bunker oil consumption. The remainder of steam is used according to two alternatives (Fig. 8-10b and c). The following economic data of the mill and assumptions are employed for the profitability calculation on the 2012 basis:

- The bunker oil price is 650 $/t.
- The price of fresh water is 0.038 $/m^3.
- The price for effluent treatment is 0.10 $/m^3.

- The selling price of electricity to the grid is 90 $/MWhr (Mateos-Espejel et al., 2011c).
- Number of operating days is 354 (Browne et al., 2011).

The total reduction in effluent production, water and bunker oil savings, and electricity generation are translated into costs and summarized in Table 8-4. The bunker oil savings is the biggest portion of net profit in both alternatives. Purchasing the new HEX area and condensing turbine in Alt. 1 are the main contributors to total capital costs. The capital cost of Alt. 2 is around three fold of Alt.1 and is due to purchasing very expensive AHP. The payback period of Alt. 1, which is the installation of cogeneration and selling electricity to the grid, is short and takes 1.8a to recover all the capital costs. On the other hand, the payback period of Alt. 2 with trigeneration and selling electricity to the grid is long (5.8a). Therefore, the short payback period, low capital cost, and higher net profit make the Alt. 1 extremely attractive for investment.

Table 8-4 - The economic benefit of savings from different resources – Mill A

	Effluent Reduction (m^3/h)	**Water saving (m^3/h)**	**Excess Steam (MW)**	**Bunker oil saving (t/d)**	**Extra electricity generation for selling (MW)**	**Effluent Reduction (M$/a)**	**Water saving (M$/a)**
Alt. 1	893 (36%)	948 (38%)	67.5 (27%)	52	8.5	0.8	0.3
Alt. 2	893 (36%)	948 (38%)	67.5 (27%)	52	8.5	0.8	0.3
	Bunker oil saving (M$/a)	**Selling extra electricity (M$/a)**	**Increase in operating cost (M$/a)**	**Net profit (M$/a)**	**Total Capital cost (M$)**	**Payback period (a)**	
Alt. 1	12.0	6.5	1.0	18.6	33.2	1.8	
Alt. 2	12.0	6.5	2.7	16.9	97.0	5.8	

8.2.8 Step 5: Implementation strategy

According to the profitability analysis, Alt. 1 is more promising for implementation. To implement all the energy and water projects and cogeneration that are involved in Alt. 1, a two-phase strategy is employed (Table 8-5):

Phase 1: Reduction of bunker oil consumption from power boiler

To perform this phase, all water reutilization projects that have been shown in Fig. 8-5 to 9-7 and also the HEX network of the water production network that has been illustrated in Fig. 8-9 should be implemented. These projects require 15.6 M$ of investment costs

and will lead to 32.8 MW of steam saving and result in 12.8 M$/a in net profits with the short payback period of 1.2a.

Phase 2: Extra electricity generation

The HEX network of the air production network that has been shown in Fig. 8-8 is proposed to be implemented at this phase. This results in 34.7 MW of additional steam saving that can be used to generate 8.5 MW of extra electricity by the installation of a new condensing turbine as shown in Fig. 8-10b. The extra electricity is assumed to be sold to the grid and to generate new profit of 5.8 M$/a. Implementation of this phase entails 17.6 M$ of investment for HEXs and the turbine and the payback period is 3.0a that is much longer than the phase 1. However, the combination of two phases leads to a short payback period of 1.8a.

Table 8-5 - Strategy to implement Alt. 1 – Mill A

	Projects to be done	Steam saving (MW)	Capital cost (M$)	Net profit (M$/a)	Payback period (a)
Phase 1: Reduction of 80% of bunker oil consumption	1-All water reutilization 2-HEXs of water network	32.8	15.6	12.8	1.2
Phase 2: Extra electricity generation	3-HEXs of air network 4-Condensing turbine	34.7	17.6	5.8	3.0
	Total	**67.5**	**33.2**	**18.6**	**1.8**

8.2.9 Step 6: Post benchmarking

Figure 8-2 and 8-3 demonstrate the post-benchmarking results if all the projects are implemented. Figure 8-2 displays that the steam consumption at bleaching, the pulp machine, and other users has been significantly reduced and this has brought the total steam consumption of the portion of Kraft *paper* pulping with batch digester lower than the 25th percentile of Canadian mills. Figure 8-3 also shows that the water consumption has been considerably reduced at washing, bleaching, and recausticizing. The total water consumption has been brought close to average mills designed in the 1980s.

The predicted scope for steam and water savings using Eqs [1] and [2] was 33 and 44% respectively and the final steam and water savings were respectively 27 and 38%, which are considerably close. This shows that these equations are reliable for calculating the scope.

8.3 Mill B

8.3.1 Step 2: Pre-benchmarking with current practice

The pre-benchmarking of steam and water consumption is illustrated in Fig. 8-11 and 8-12. Figure 8-11 shows that the steam consumption of evaporation is greater than the 75th percentile because of employing the black liquor (BL) concentrator to concentrate strong BL from 47% to 68% of dissolved solid using live steam at line 2. The steam consumption of the pulp machine is high due to the utilization of low temperature water (40-65°C) at the pulp machine and the high temperature of exhaust air at the outlet of the dryer (132°C) at both lines. The total steam consumption of the whole mill is close to the 75th percentile, however, there is still potential to save steam.

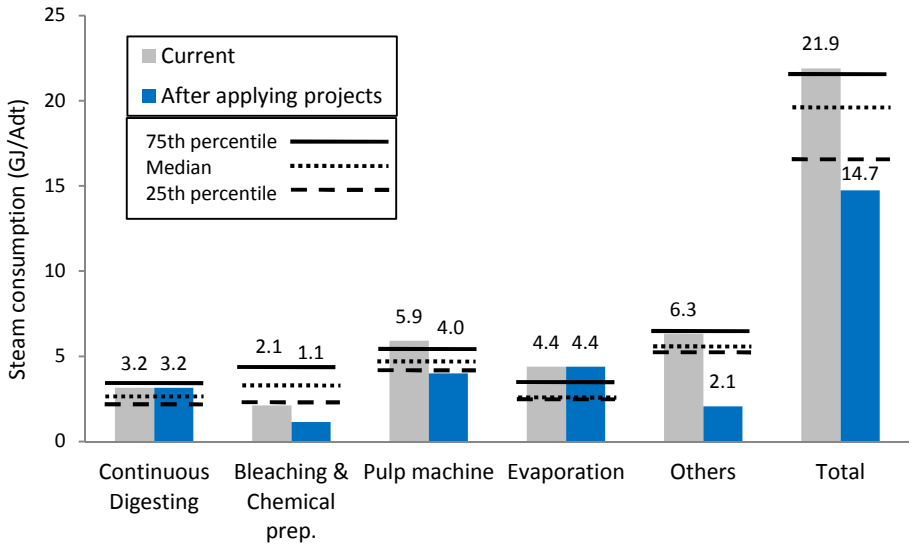

Fig. 8-11 - Steam consumption of main departments and complete mill – currently and after applying projects - Mill B

Figure 8-12 indicates that mill B on both lines integrates well from the standpoint of water consumption. The only areas that may require further integration for reducing their water

consumption, are washing and recausticizing. There is not much expectation to decrease the water consumption at this mill.

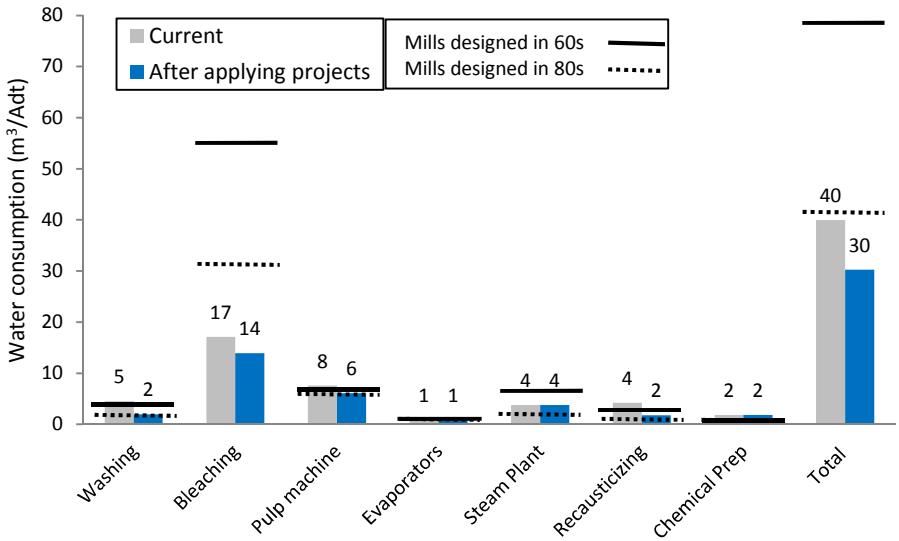

Fig. 8-12 - Water consumption – currently and after applying projects -Mill B

Based on Eqs [1] and [2], the scope for steam and water savings are 38% and 24%, respectively.

8.3.2 Changes in Water Reutilization Network (Step 3-1: SEWNA)

The Water & Energy Pinch curves for all sinks and sources are constructed in Fig. 8-13 and 8-14. Figure 8-13a and 8-14a show the raw data before reutilization and Fig. 8-13b and Fig. 8-14b display the final results after water reutilization for lines 1 and 2, respectively.

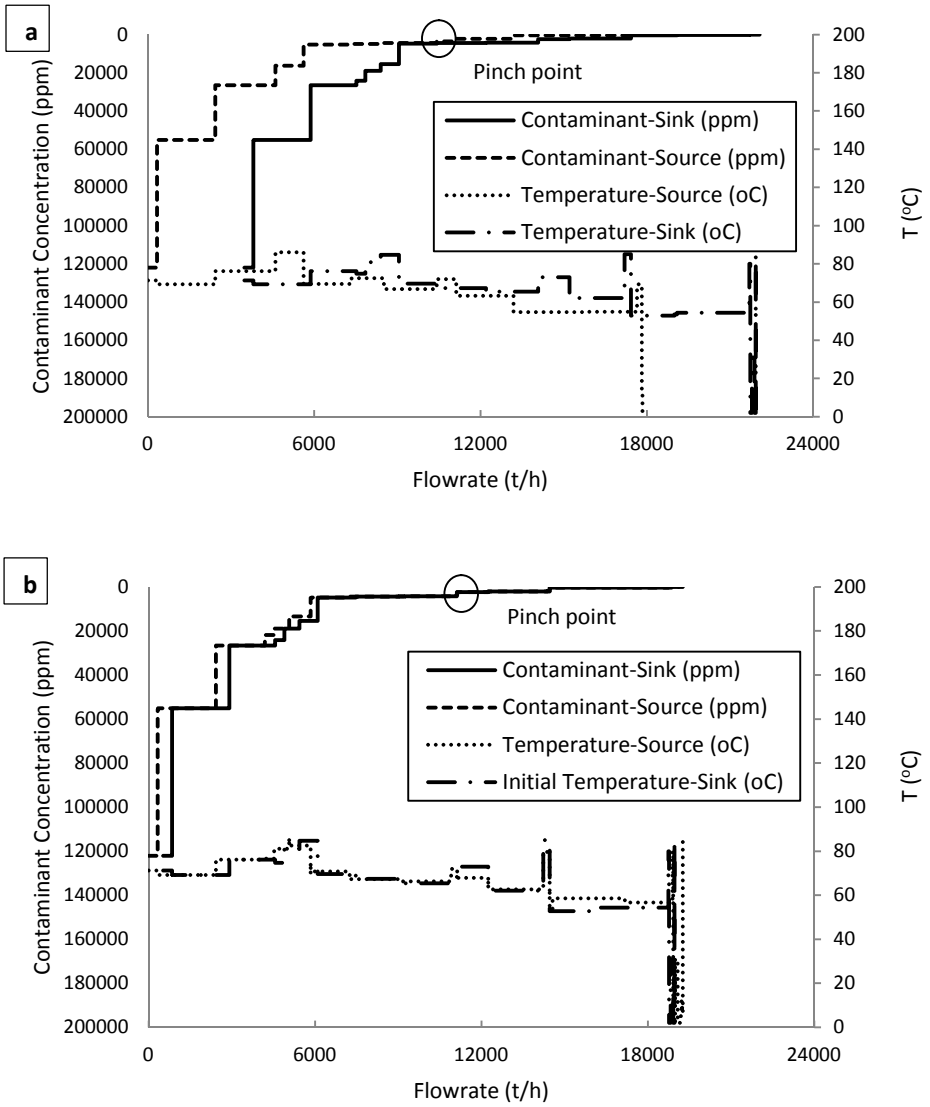

Fig. 8-13 - Water & Energy Pinch Curves, (a) before water reutilization, (b) after water reutilization – Mill B, Line 1

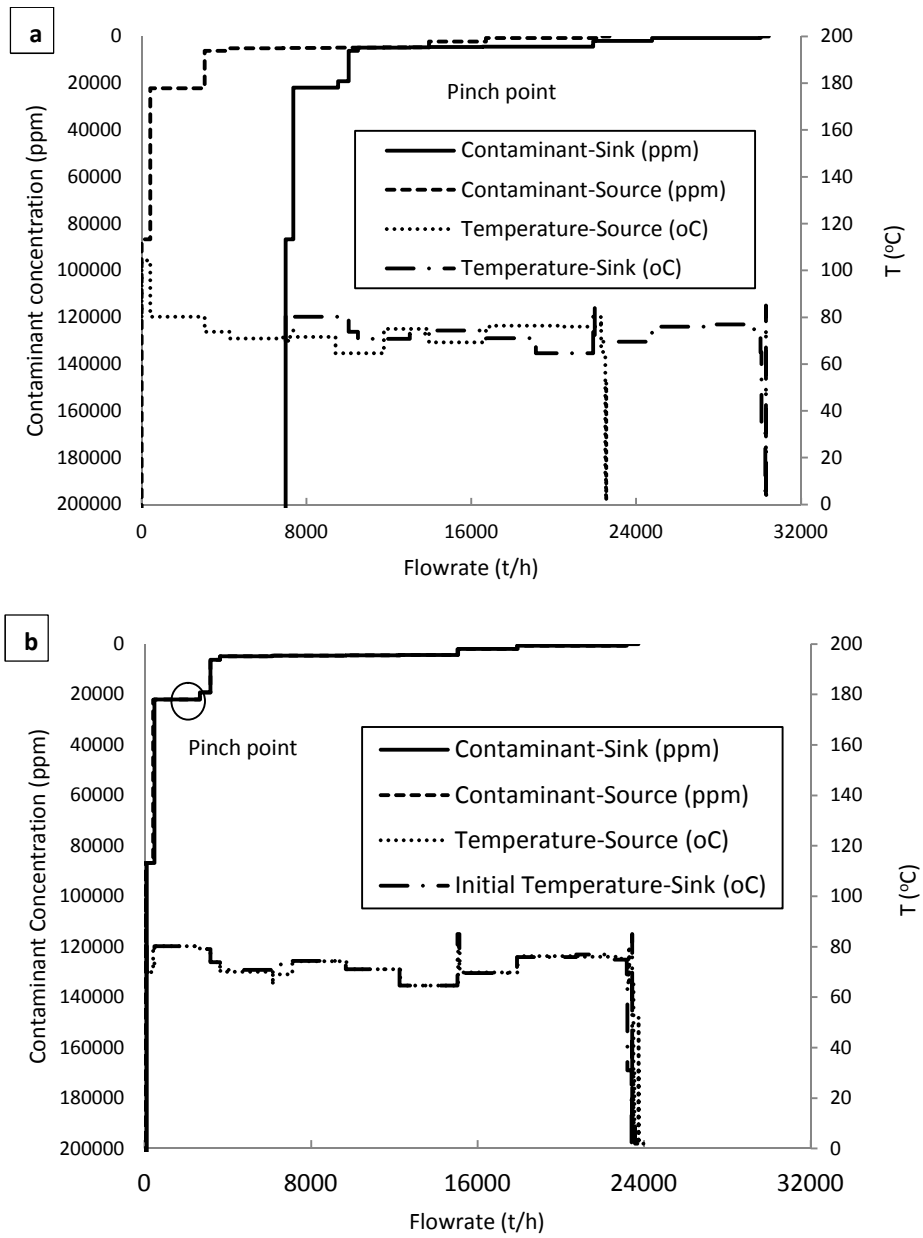

Fig. 8-14 - Water & Energy Pinch Curves, (a) before water reutilization, (b) after water reutilization – Mill B, Line 2

The final changes in water utilization and filtrate reutilization of line 1 are demonstrated in Fig. 8-15b to 8-17b. Figure 8-18b to 8-20b also illustrate the changes in line 2. The total number of changes that is carried out in the flowrate of the existing connections is 28 and 17 for line 1 and 2, respectively. The total new connections required at line 1 and 2 are 29 and 8, respectively. With these changes, 350 (23%) and 348 m^3/h (25%) of water can be respectively saved at lines 1 and 2. The total effluent reduction of the mill is 706 m^3/h (25%).

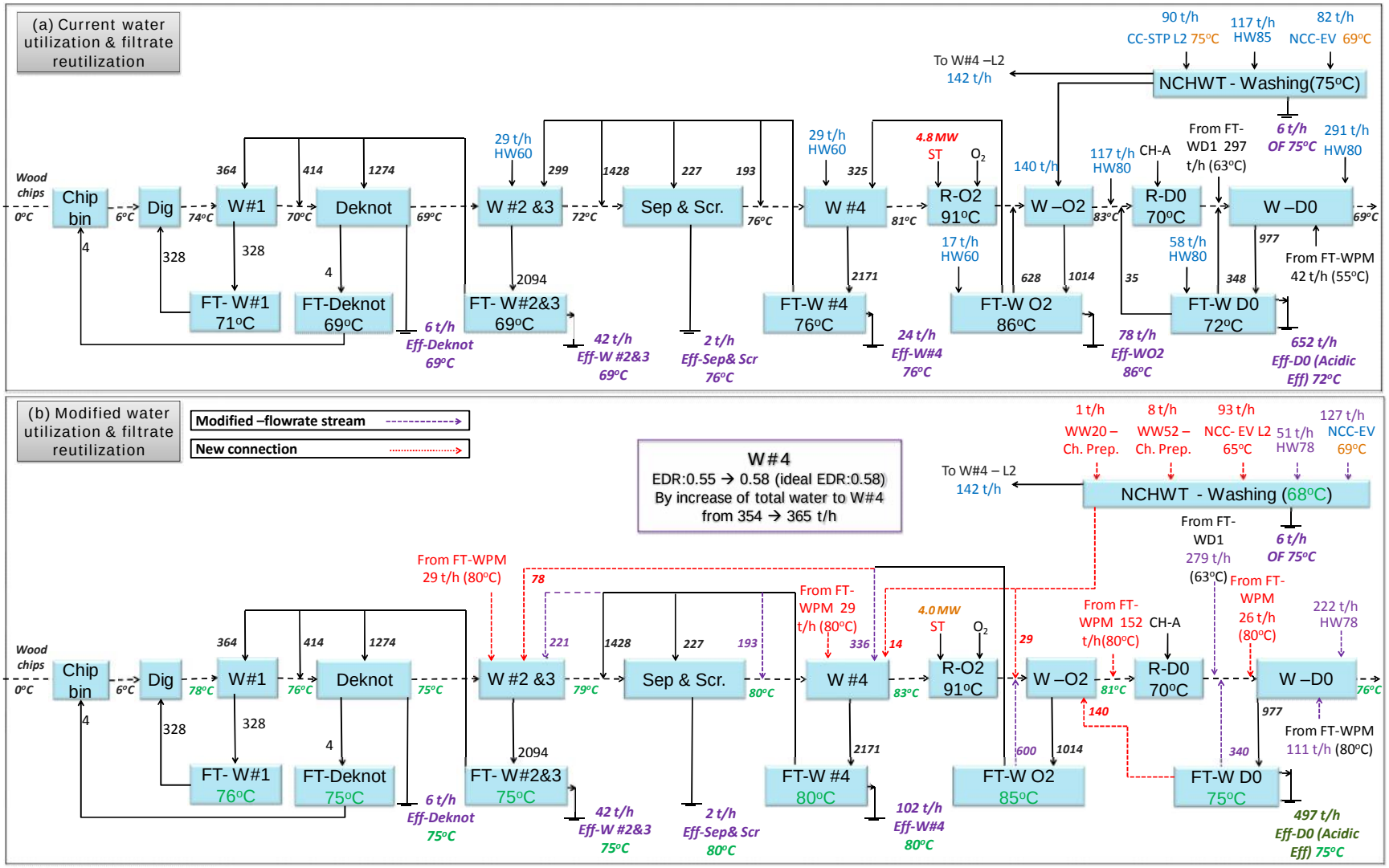

Fig. 8-15 - (a) current, (b) final water utilization and filtrate reutilization in digesting, washing, and bleaching departments – Mill B, Line 1(L1); dotted red lines: new connections; dashed purple lines: the existing connections with change in flowrate (L2: line 2, W: washer, FT: filtrate tank, Sep & Scr.: separators and screeners, Dig: digester, Deknot: deknotters, R: reactor, M: steam mixer, PM: pulp machine, NCHWT: non-clean hot water tank, CC-STP: clean condensate of steam plant, NCC-EV: non-clean condensate of evaporation, WW: warm water: FW: fresh water: HW: hot water, Eff.: effluent)

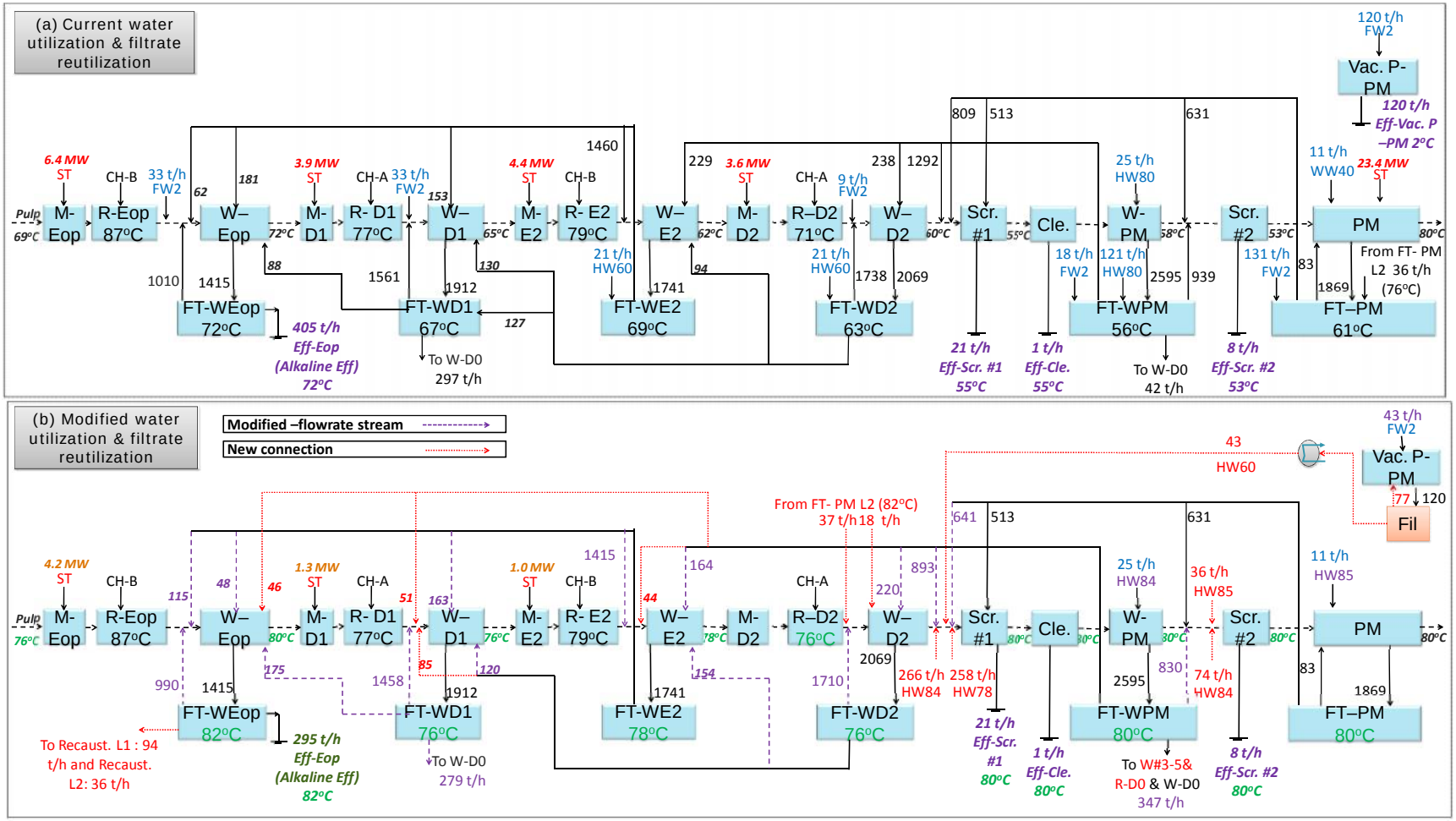

Fig. 8-16 - (a) Current, (b) final water utilization and filtrate reutilization in bleaching and pulp machine departments – Mill B, Line 1 (L1); dotted red lines: new connections; dashed purple lines: the existing connections with change in flowrate (L2: line 2, W: washer, R: reactor; M: steam mixer, FT: filtrate tank, Cle.: cleaners, Scr.: screeners, PM: pulp machine, Vac. P: vacuum pump, Fil: filter, WW: warm water: FW: fresh water: HW: hot water, CH-A: acidic chemicals, CH-B: base chemicals, ST: steam, Eff.: effluent)

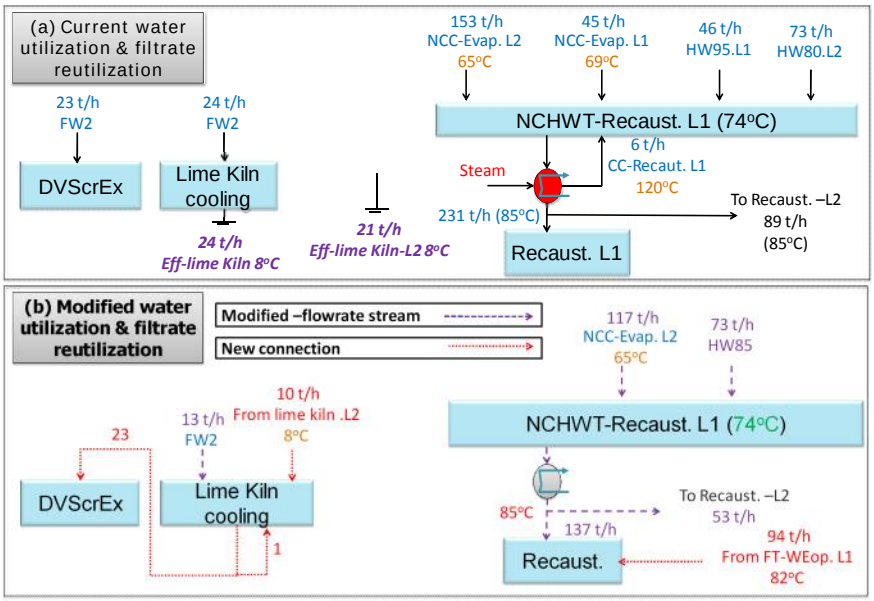

Fig. 8-17 - (a) current, (b) final water utilization and filtrate reutilization at recausticizing - Mill B, Line 1 (L1); dotted red lines: new connections; dashed purple lines: the existing connections with change in flowrate (L2: line 2, DVScrEx: dust vent scrubber exchanger, NCHWT-Recaust.: non-clean hot water tank of recausticizing, FT-WEop: filtrate tank of washer Eop, NCC-Evap.: non-clean condensate of evaporation, CC: clean condensate, FW: fresh water: HW: hot water, Eff.: effluent)

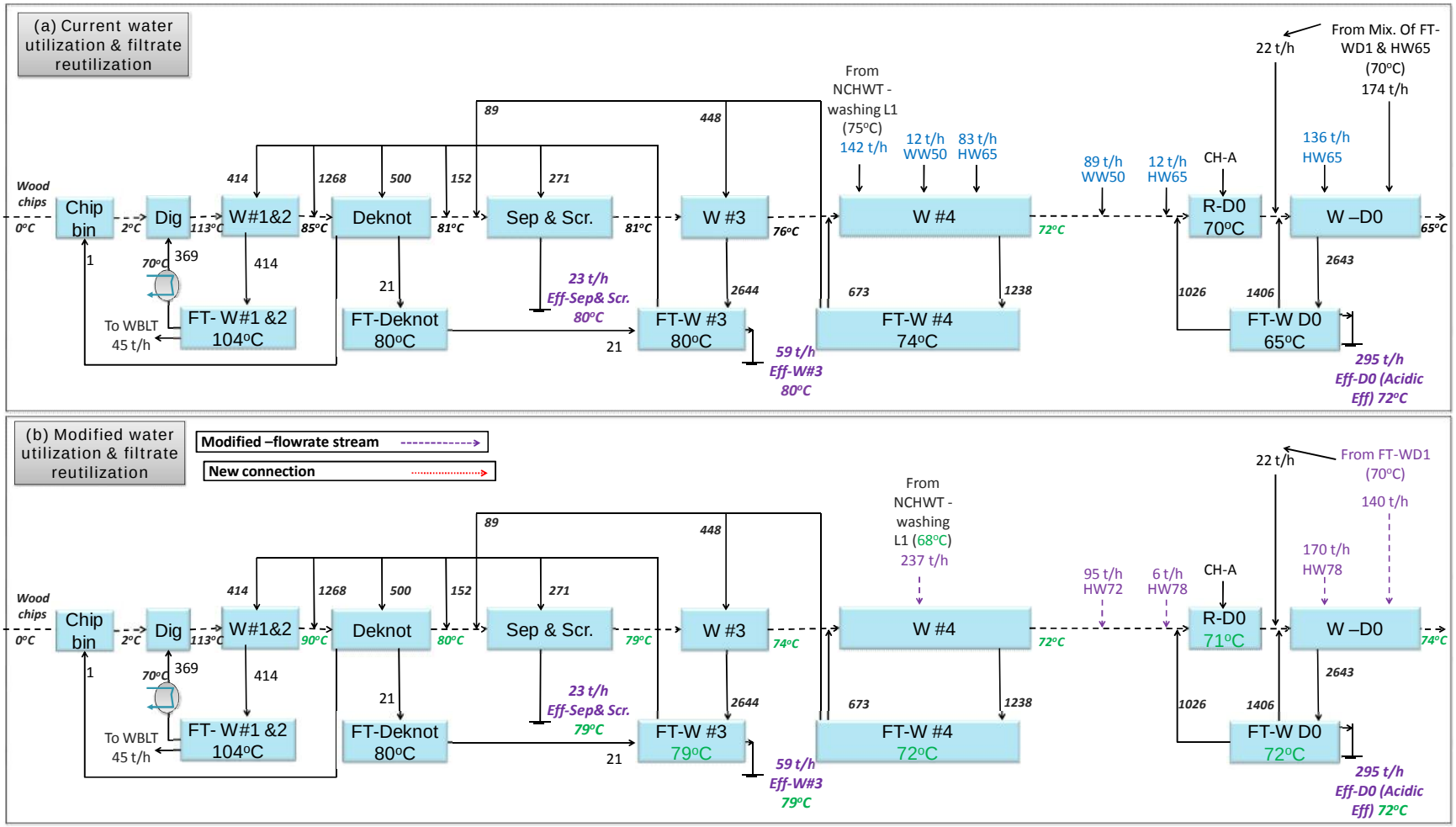

Fig. 8-18 - (a) current, (b) final water utilization and filtrate reutilization in digesting, washing, and bleaching departments – Mill B, Line 2 (L2); dotted red lines: new connections; dashed purple lines: the existing connections with change in flowrate (L1: line 1, R: reactor, W: washer, FT: filtrate tank, Sep & Scr.: separators and screeners, Dig: digester, Deknot: deknotters, NCHWT: non-clean hot water tankWW: warm water: FW: fresh water: HW: hot water, Eff.: effluent)

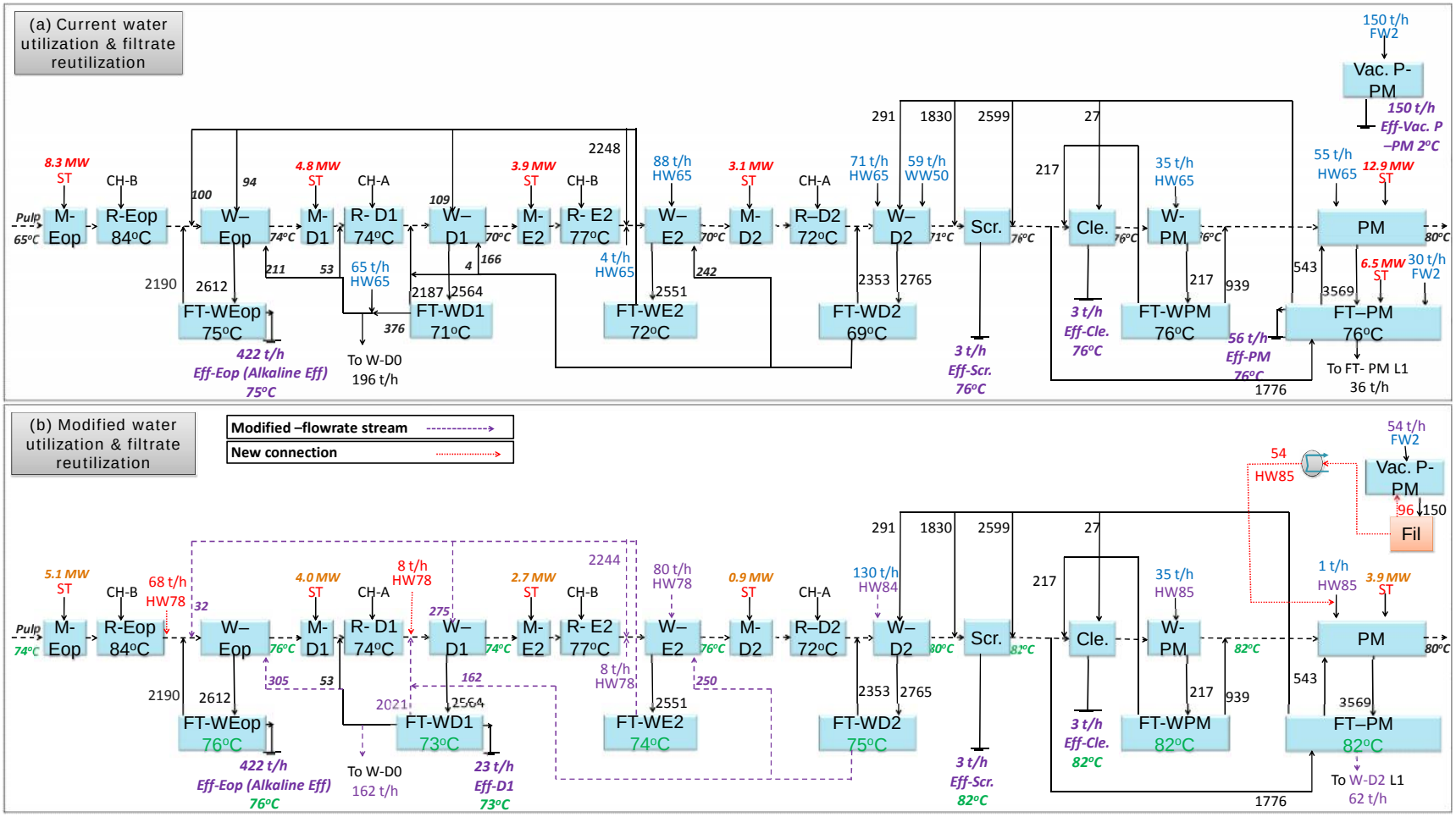

Fig. 8-19 - (a) Current, (b) final water utilization and filtrate reutilization in bleaching and pulp machine departments – Mill B, line 2 (L2); dotted red lines: new connections; dashed purple lines: the existing connections with change in flowrate (L1: line 1, W: washer, R: reactor; M: steam mixer, FT: filtrate tank, Cle.: cleaners, Scr.: screeners, PM: paper machine, Vac. P: vacuum pump, Fil: filter, WW: warm water: FW: fresh water: HW: hot water, CH-A: acidic chemicals, CH-B: base chemicals, ST: steam, Eff.: effluent)

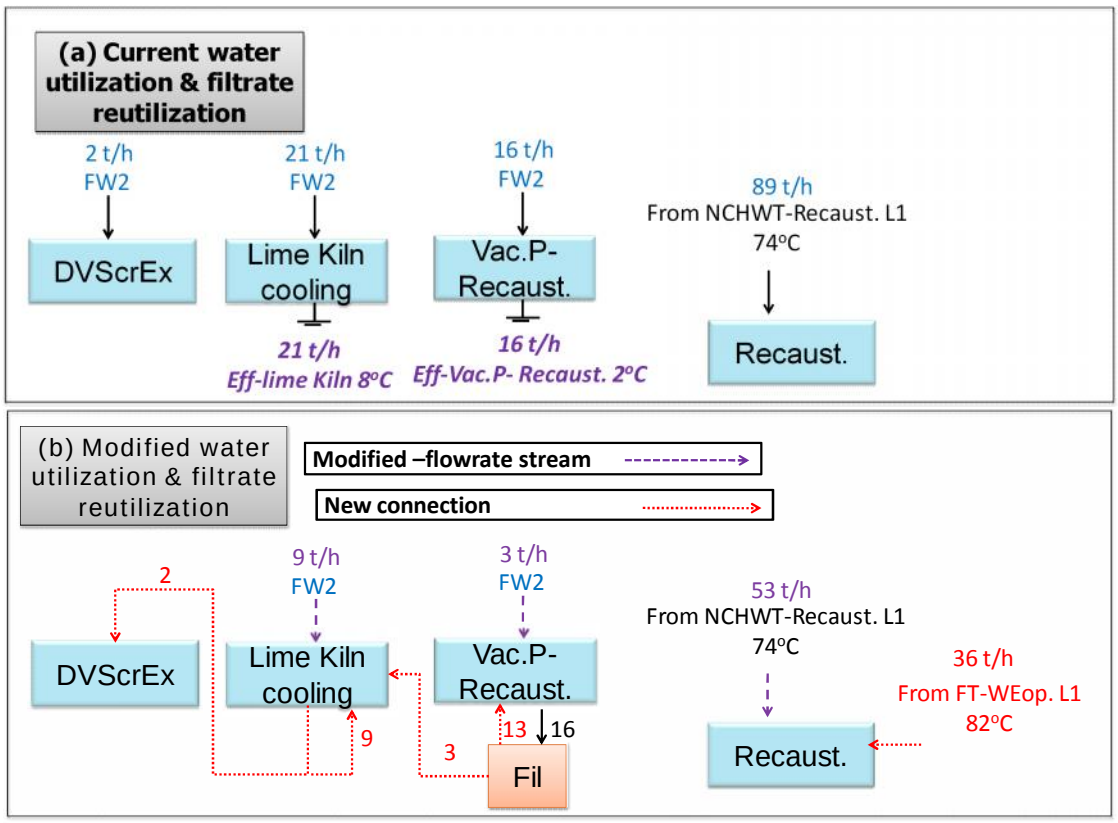

Fig. 8-20 - (a) current, (b) final water utilization and filtrate reutilization at recausticizing - Mill B, Line 2 (L2); dotted red lines: new connections; dashed purple lines: the existing connections with change in flowrate (L1: line 1, DVScrEx: dust vent scrubber exchanger, Vac. P – Recaust.: vacuum pump of recausticizing, Fil.: filter, NCHWT-Recaust.: non-clean hot water tank of recausticizing, FT-WEop: filtrate tank of washer Eop, FW: fresh water: HW: hot water, Eff.: effluent)

8.3.3 Synthesis of the performance improvement projects (Step 3-2: EPA)

There are two performance improvement projects at line 1 and one at line 2. On both lines, a flash tank should be installed to recover 4.2 MW of steam from the blowdown water of boilers (Table 8-6). At line 1, as shown in Fig. 8-15b, the EDR of washer #4 is 0.55, which is smaller than the ideal one (0.58). To resolve this and improve the performance of the washer, the total filtrate to this washer increases from 354 to 365 t/h.

Table 8-6 - Summary of the performance improvement projects – Mill B

#	Project name	Description	Consequence of project on the process	Steam saving (MW)
1	Deaerator – Line 1	Flash blowdown and inject the produced steam to deaerator	-Reduction of steam consumption at deaerator	1.1
2	Deaerator - Line 2	Flash blowdown and inject the produced steam to deaerator	-Reduction of steam consumption at deaerator	3.1

8.3.4 HEX network changes (Step 3-3: R-HEN)

8.3.4.1 Targeting

The steam consumption of current conditions, after applying SEWNA and EPA, and also after performing the targeting stages for five different categories of steam users of lines 1 and 2 is respectively presented in Table 8-7 and 8-8.

For line 1, the results show that four NRHS-SH heaters (Table 8-7a) consume 72.1 MW of steam that cannot be replaced by other heat sources. There are four RHS-SH heaters (Table 8-7b) where the steam has been reduced from 32.3 to 3.1 MW using SEWNA and the remainder can also be replaced by other heat sources. In the case of steam injection points, there is no FHexHS-SI (Table 8-7c). At the two NRHS-NFHexHS-SI points (Table 8-7d), the steam consumption cannot be reduced using the HEN design. The total number of RHS-NFHexHS-SI points is eight (Table 8-7e) and steam has been decreased from 66.2 to 49.8 MW using two other methods (SEWNA and EPA). It can potentially be decreased to 17.4 MW by targeting the new temperature for water to the pulp line and deaerator.

Table 8-7 - The steam consumption of current situation, after applying SEWNA, EPA and also the potential for steam reduction using R-HEN and final steam consumption after HEX network design for all steam users of the mill – Mill B, Line 1

#	Equipment	Current (MW)	After SEWNA (MW)	After EPA (MW)	Potential using R-HEN (MW)	Final after HEX network design (MW)
(a) Non-Replaceable Heat Source-Steam Heater (NRHS-SH)						
1	Upper heater – Digesting , L1	4.1	4.1	4.1	4.1	4.1
2	Lower heater – Digesting, L1	3.1	3.1	3.1	3.1	3.1
3	Dryer – PM, L1	38.9	38.9	38.9	38.9	38.9
4	Evaporation, L1	26.0	26.0	26.0	26.0	26.0
Total NRHS-SH		***72.1***	***72.1***	***72.1***	***72.1***	***72.1***
(b) Replaceable Heat Source – Steam Heater (RHS-SH)						
1	Air heater –RB, L1	3.1	3.1	3.1	0	0
2	Contaminated hot water 85°C heater – Recaust., L1	4.9	0	0	0	0
3	Hot water 80°C heater #1, L1	7.3	0	0	0	0
4	Hot water 80°C heater #2, L1	17.0	0	0	0	0
Total RHS- SH		***32.3***	***3.1***	***3.1***	***0***	***0***
(c) Feasible HEX Heat Sink – Steam Injection (FHexHS-SI)						
Total FHexHS-SI		***0***	***0***	***0***	***0***	***0***
(d)Non-Reducible Heat Source– Non-Feasible HEX Heat Sink – Steam Injection (NRHS-NFHexHS-SI)						
1	Steaming vessel – Digesting, L1	10.6	10.6	10.6	10.6	10.6
2	Evaporation, L1	1.4	1.4	1.4	1.4	1.4
Total NRHS-NFHexHS-SI		***12.0***	***12.0***	***12.0***	***12.0***	***12.0***
(e)Reducible Heat Source– Non-Feasible HEX Heat Sink – Steam Injection (RHS-NFHexHS-SI)						
1	O2 reactor – Bleaching, L1	4.8	5.9	5.9	3.0	4.0
2	Eop steam mixer - Bleaching, L1	6.4	9.2	9.2	2.8	4.2
3	D1 steam mixer - Bleaching, L1	3.9	3.0	3.0	0.8	1.3
4	E2 steam mixer – Bleaching, L1	4.4	2.8	2.8	0.3	1.0
5	D2 steam mixer - Bleaching, L1	3.6	0.5	0.5	0	0
6	Shower of pulp machine, L1	18.2	4.6	4.6	0	0
7	Predryer of pulp machine, L1	5.2	5.2	5.2	0	0
8	Deaerator – Steam Plant, L1	19.7	19.7	18.6	10.5	13.7
Total NRHS-NFHexHS-SI		***66.2***	***50.9***	***49.8***	***17.4***	***24.2***

For line 2, there are five NRHS-SH heaters (Table 8-8a) where 124.5 MW of steam is consumed and steam cannot be replaced by other heat sources. There are three RHS-SH heaters (Table 8-8b) where the steam has been reduced from 24.3 to 20.7 MW using SEWNA and the remainder can also be replaced by other heat sources. In the case of steam injection points, there are three FHexHS-SI (Table 8-8c) where the steam consumption has been reduced from 19.6 to 3.7 by means of SEWNA. The remainder also can be eliminated completely. At the three NRHS-NFHexHS-SI points (Table 8-8d), the steam consumption cannot be reduced using the HEN design. The total number of RHS-NFHexHS-SI points is six (Table 8-8e) and steam can potentially be decreased to 33.0 MW by targeting the new temperature for water to the pulp line and deaerator.

Table 8-8 - The steam consumption of current situation, after applying SEWNA, EPA and also the potential for steam reduction using R-HEN and final steam consumption after HEX network design for all steam users of the mill – Mill B, Line 2

#	Equipment	Current (MW)	After SEWNA (MW)	After EPA (MW)	Potential using R-HEN (MW)	Final after HEX network design (MW)
(a) Non-Replaceable Heat Source-Steam Heater (NRHS-SH)						
1	Upper heater – Digesting , L2	15.1	15.1	15.1	15.1	15.1
2	Lower heater – Digesting, L2	9.7	9.7	9.7	9.7	9.7
3	Dryer – PM, L2	38.9	38.9	38.9	38.9	38.9
4	Evaporation, L2	23.9	23.9	23.9	23.9	23.9
5	Black liquor concentrator, L2	36.9	36.9	36.9	36.9	36.9
Total NRHS-SH		***124.5***	***124.5***	***124.5***	***124.5***	***124.5***
(b) Replaceable Heat Source – Steam Heater (RHS-SH)						
1	Space air heater, L2	14.7	14.7	14.7	0	0
2	Air heater – RB & PB, L2	6.0	6.0	6.0	0	0
3	Hot water 65°C heater, L2	3.6	0	0	0	0
Total RHS- SH		***24.3***	***20.7***	***20.7***	***0***	***0***
(c) Feasible HEX Heat Sink – Steam Injection (FHexHS-SI)						
1	Filtrate tank of pulp machine, L2	6.5	3.7	3.7	0	0
2	Hot water 75°C production, L1	8.1	0	0	0	0
3	Hot water 60°C production, L2	5.0	0	0	0	0
Total FHexHS-SI		***19.6***	***3.7***	***3.7***	***0***	***0***
(d)Non-Reducible Heat Source– Non-Feasible HEX Heat Sink – Steam Injection (NRHS-NFHexHS-SI)						
1	Steaming vessel – Digesting, L2	21.9	21.9	21.9	21.9	21.9
2	Evaporation, L2	1.4	1.4	1.4	1.4	1.4
3	Steam plant, L2	0.4	0.4	0.4	0.4	0.4
Total NRHS-NFHexHS-SI		***23.7***	***23.7***	***23.7***	***23.7***	***23.7***
(e)Reducible Heat Source– Non-Feasible HEX Heat Sink – Steam Injection (RHS-NFHexHS-SI)						
1	Eop steam mixer - Bleaching, L2	8.3	9.7	9.7	2.7	5.1
2	D1 steam mixer - Bleaching, L2	4.8	6.8	6.8	3.5	4.0
3	E2 steam mixer – Bleaching, L2	3.9	4.5	4.5	2.5	2.7
4	D2 steam mixer - Bleaching, L2	3.1	5.5	5.5	0	0.9
5	Shower of pulp machine, L2	12.9	13.1	13.1	1.6	3.9
6	Deaerator – Steam Plant, L2	39.6	39.6	36.5	22.7	28.0
Total NRHS-NFHexHS-SI		***72.6***	***79.2***	***76.1***	***33.0***	***44.6***

Table 8-9 presents the aggregate results of the theoretical minimum steam requirement (TMinSR) and theoretical maximum steam saving (TMaxSS) for all five categories at both lines and the whole mill. The results suggest that by applying SEWNA and EPA, 14% of current steam consumption has already been saved and 23% can also be potentially saved by means of R-HEN while at least 63% of current steam consumption is necessary and should be used by current steam users.

Table 8-9 - The aggregation of all types of steam users for current situation, after applying NSWEA and EPA and the targeting and final steam saving by means of R-HEN – Mill B

#	Type of steam user		Current (MW)	After SEWNA (MW)	After EPA (MW)	TMinSR* using R-HEN (MW)	Final SR after HEX network design (MW)	TMaxSS† using R-HEN (MW)	Final SS using HEX network design (MW)
					Line 1				
1	team heater	NRHS-SH	72.1	72.1	72.1	72.1	72.1	0	0
2		RHS-SH	32.3	3.1	3.1	0	0	3.1	3.1
3	Steam injection	FHexHS-SI	0	0	0	0	0	0	0
4		NRHS-NFHexHS-SI	12.0	12.0	12.0	12.0	12.0	0	0
5		RHS-NFHexHS-SI	66.2	50.9	49.8	17.4	24.2	32.6	25.8
Total (MW)			***182.6***	***138.1***	***137.0***	***101.5***	***108.3***	***35.7***	***28.9***
Percentage over current consumption			***-***	***76%***	***75%***	***56%***	***59%***	***19%***	***16%***
					Line 2				
1	Steam heater	NRHS-SH	124.5	124.5	124.5	124.5	124.5	0	0
2		RHS-SH	24.3	20.7	20.7	0	0	20.7	20.7
3	Steam injection	FHexHS-SI	19.6	3.7	3.7	0	0	3.7	3.7
4		NRHS-NFHexHS-SI	23.7	23.7	23.7	23.7	23.7	0	0
5		RHS-NFHexHS-SI	72.6	79.2	76.1	33.0	44.6	43.1	31.5
Total (MW)			***264.7***	***251.8***	***248.7***	***181.2***	***192.8***	***67.5***	***55.9***
Percentage over current consumption			***-***	***95%***	***94%***	***68%***	***73%***	***26%***	***21%***
					Whole mill				
1	Steam heater	NRHS-SH	196.6	196.6	196.6	196.6	196.6	0	0
2		RHS-SH	56.6	23.8	23.8	0	0	23.8	23.8
3	Steam injection	FHexHS-SI	19.6	3.7	3.7	0	0	3.7	3.7
4		NRHS-NFHexHS-SI	35.7	35.7	35.7	35.7	35.7	0	0
5		RHS-NFHexHS-SI	138.8	130.1	125.9	50.4	68.8	75.7	57.3
Total (MW)			***447.3***	***389.9***	***385.7***	***282.7***	***301.1***	***103.2***	***84.8***
Percentage over current consumption			***-***	***87%***	***86%***	***63%***	***67%***	***23%***	***19%***

*TMinSR: Theoretical Minimum Steam Requirement
†TMaxSS: Theoretical Maximum Steam Saving

8.3.4.2 HEX network

A part of the existing HEX network of both lines that undergoes the modifications is displayed in Fig. 8-21a to 8-23a. The existing HEX network consists of the air preheating and warm/hot water production networks using the process stream HEXs and the air and water heaters. Figure 8-21b to 8-23b illustrate the final HEX network after applying the HEN design algorithm.

Figure 8-21b shows the new HEN to pre-heat the air for buildings, boilers, and dryers of both lines. The total new HEXs that should be purchased are one condenser at the condensing turbine of each line, two air economizers at the dryer and recovery boiler of line 2. There are also two relocated HEX (1st condenser of condensing turbine – both in lines 1 and 2) that are currently used as the air heater of recovery and power boilers of line 2 and the space air heater of buildings. The current air heater of the recovery boiler (RB) of line 1 should be relocated and enlarged to be employed as the first air economizer of the dryer on line 2.

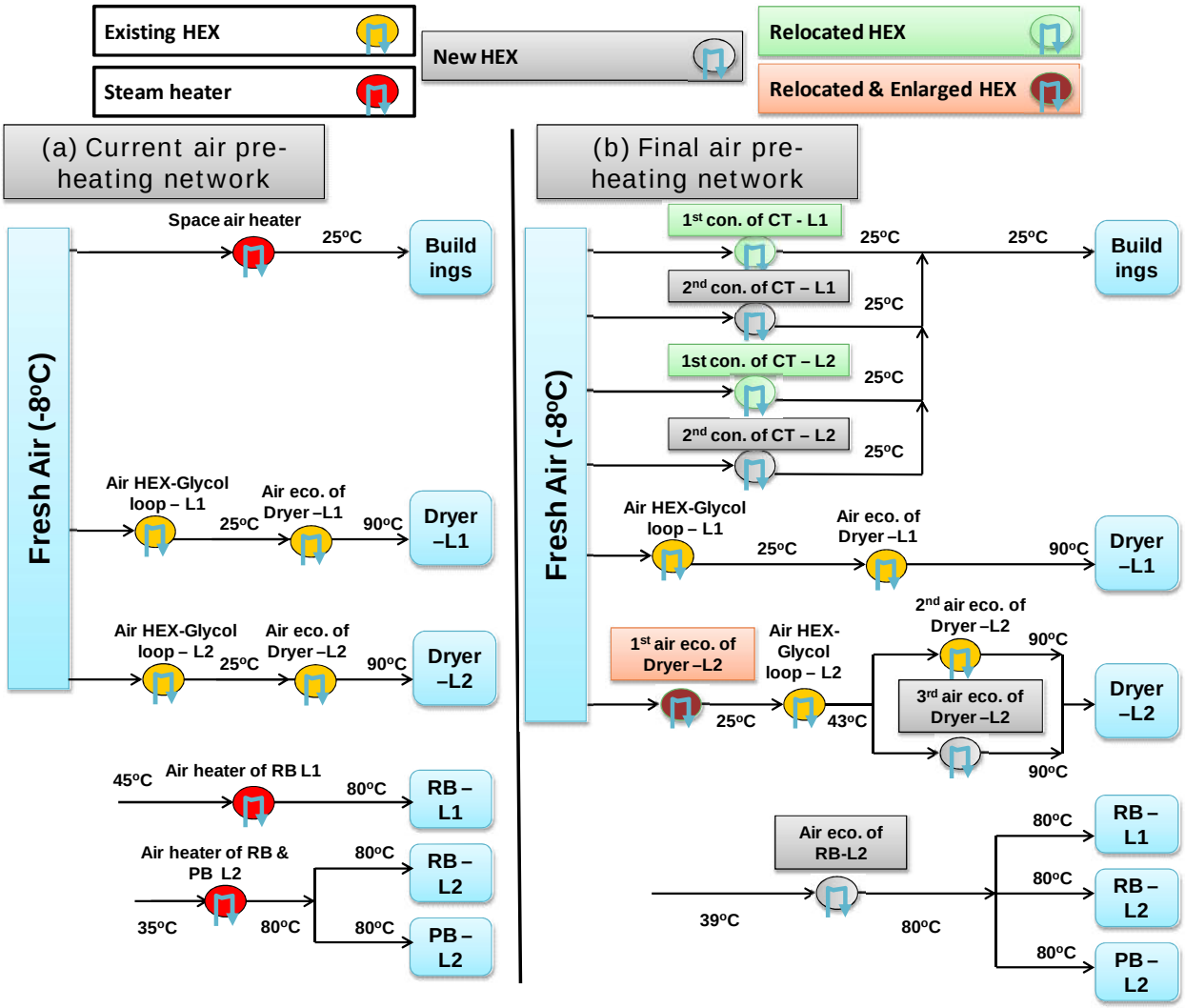

Fig. 8-21 - (a) Current and (b) final air pre-heating network after applying SWAEI methodology – Mill B, Line 1(L1) &2 (L2); (RB: recovery boiler, PB: power boiler, PM: paper machine, eco.: economizer, CT: condensing turbine, con.: condenser)

Figure 8-22b to 8-23b illustrate the new HEN for the warm/hot water production network of lines 1 and 2. The total new HEXs for the water production network are 13 (five in line 1, and eight in line 2). The green liquor (GL) cooler of recausticizing of both lines (Fig. 8-22a) should be enlarged to produce hot water (HW) at 84°C (Fig. 8-22b). Water heater #2 of line 1 (Fig. 8-22a) should be relocated and used as a cooler for clean flashed steam of the pulp machine on line 1 (Fig. 8-22b). Water heater #1 on line 1 (Fig. 8-22a) also should be relocated and enlarged in order to be replaced with the existing and non-efficient cooler of non-clean steam of digesting on line 2 (Fig. 8-23b). The contaminated water heater (Fig. 8-22a) should be relocated and used

as the first cooler of blowdown water of the RB and PB on line 2 (Fig. 8-23b). Blow cooler of digesting on line 2 (Fig. 8-23a) should be enlarged and used as 2nd blow cooler (Fig. 8-23b). Water heater of line 2 (Fig. 8-23a) should be relocated and enlarged in order to be used as 2nd cooler of blowdown water of RB and PB on line 2 (Fig. 8-23b). Finally, the condensate cooler of the pulp machine (PM) on line 2 is enlarged and used to raise the temperature of white water at the PM of line 2.

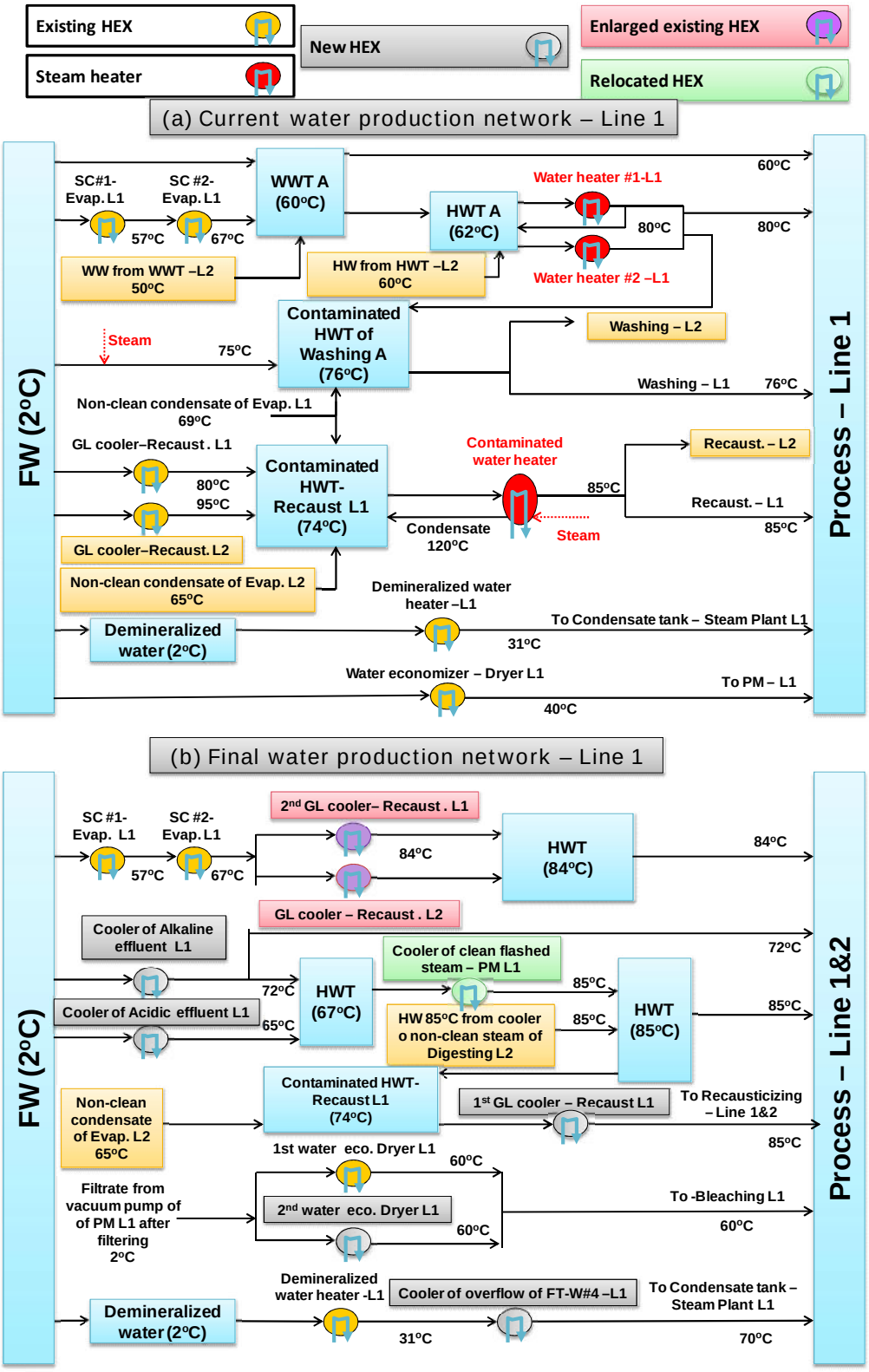

Fig. 8-22 - (a) Current and (b) final water production network after applying SWAEI methodology – Mill B, Line 1 (L1); (L2: line 2, WWT: warm water tank, HWT: hot water tank, eco.: economizer, FT-W#4: filtrate tank of washer #4, PM: pulp machine, GL: green liquor, SC: surface condenser, Evap.: evaporation, Recaust.: recausticizing)

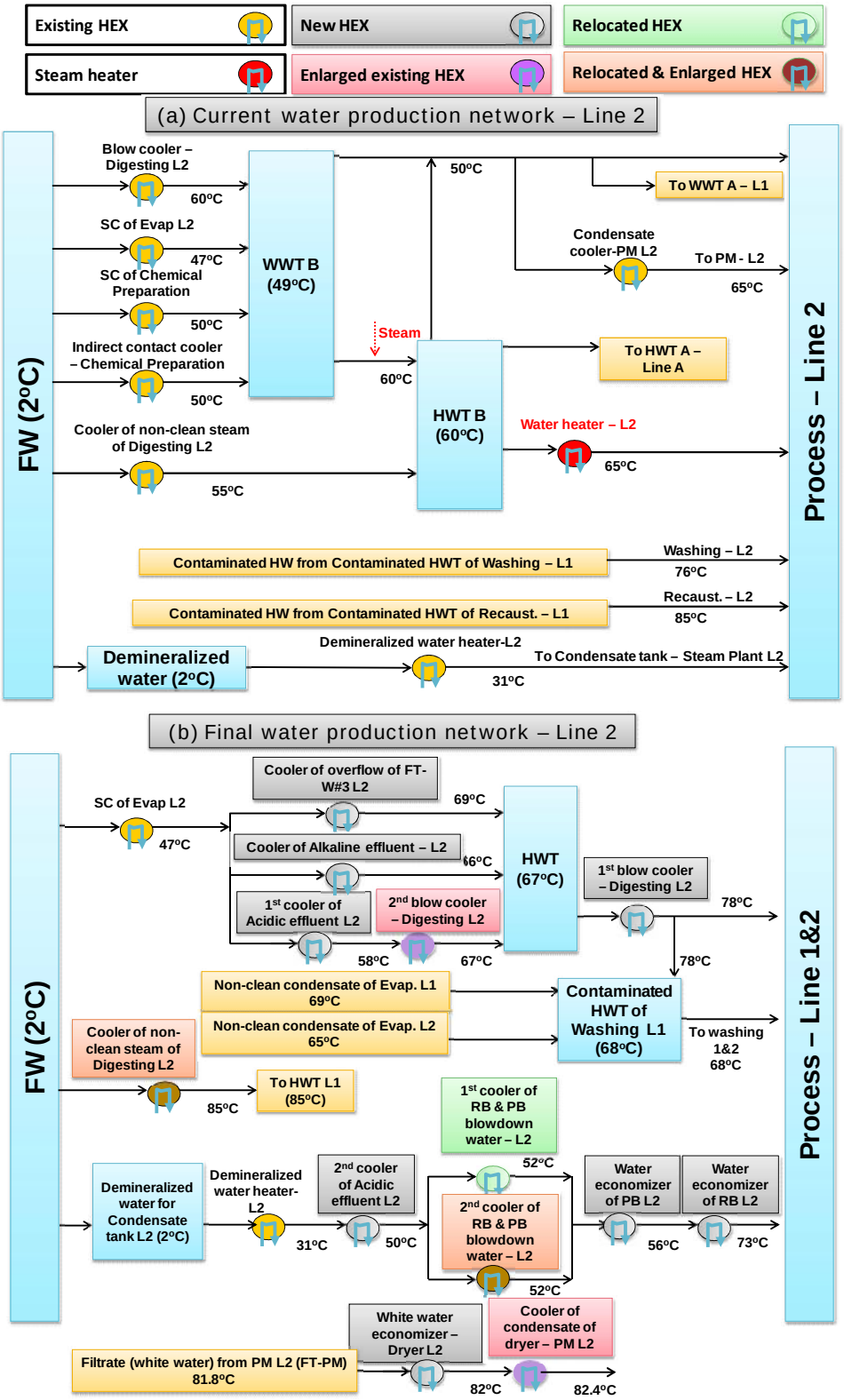

Fig. 8-23 - (a) Current and (b) final water production network after applying SWAEI methodology – Mill B, Line 2 (L2); (L1: line 1, WWT: warm water tank, HWT: hot water tank, chem. SC: surface condenser, RB: recovery boiler, PB: power boiler, Evap.: evaporation, PM: pulp machine, FT: filtrate tank, Recaust.: recausticizing, HW: hot water)

8.3.4.3 Steam saving

Table 8-7 and 8-8 present the final steam consumption for all five categories of steam users for lines 1 and 2, respectively.

For the line 1, the results show that at RHS-SH (Table 8-7b), the anticipated steam saving has been accomplished whereas at RHS-NFHexHS-SI (Table 8-7e), the goal cannot be achieved; however, the steam can be significantly reduced from 49.8 to 24.2 MW.

For line 2, the results show that at RHS-SH, FHexHS-SI (Table 8-8b and c), the anticipated steam savings have been obtained while at RHS-NFHexHS-SI (Table 8-8e), the estimated saving cannot be reached; however, the steam can be considerably decreased from 76.1 to 44.6 MW.

Table 8-9 presents the final steam requirement and saving after HEX network design for both lines and the whole mill. The total steam saving using R-HEN is large and accounts for 19% of current steam consumption of the mill. The savings when added to ones that have been achieved by SEWNA and EPA (14%) come to 33% of current steam consumption, which is considerably high. The results also show that the theoretical maximum steam saving (TMaxSS) is close to the final steam saving (23 vs. 19%).

8.3.5 Summary of improvements

Table 8-10 presents the total number of projects and steam and water savings on both lines and the whole mill. In addition, capital cost requirements for piping in the water network from the SEWNA and installation of flash tanks by EPA, the new HEX area by means of R-HEN are shown. The operating cost relating to the flash tanks and new HEX area is also calculated. Steam saving is 146.2 MW that accounts for 33% of current steam consumption. The total water saving is 695 m^3/h or 24% of current water consumption. These 60 projects entail 40.98 M$ in capital costs and add 1027 k$/a (1.03 M$/a) to the operating costs of the mill.

Table 8-10 - Summary of improvements applying three process integration techniques in sequence for Lines 1 and 2 and the whole mill – Mill B

Step of Methodology	Number of projects	Steam saving		Water saving		Capital cost	Operating cost
		MW	%	m^3/h	%	M$	k$/a
Line 1							
SEWNA	17	44.5	24	350	23	4.36	-
EPA	1	1.1	1	-3	0	0.15	42
R-HEN	9	28.7	16	-	-	14.46	373
Total	**27**	**74.3**	**41%**	**347**	**23%**	**18.97**	**415**
Line 2							
SEWNA	13	12.9	5	348	25	0.98	-
EPA	1	3.1	1	-	-	0.35	118
R-HEN	19	55.9	22	-	-	19.68	494
Total	**33**	**71.9**	**27%**	**348**	**25%**	**21.01**	**612**
Whole mill							
SEWNA	30	57.4	13	698	24	5.34	-
EPA	2	4.2	1	-3	0	0.50	160
R-HEN	28	84.6	19	-	-	35.14	867
Total	**60**	**146.2**	**33%**	**695**	**24%**	**40.98**	**1027**

8.3.6 Step 4: Energy Upgrading, Conversion, and Selling Steam

This mill currently has on each line two back pressure turbines that produce medium (MP) and low (LP) pressure steam and 48.9 MW of electricity (Fig. 8-24a). In total, 447.3 MW of MP and LP steams are consumed at the process and 60.5 MW of energy is lost in the turbines. It should be noted that this mill does not utilize fossil fuel for steam generation and, hence, the reduction of the existing steam capacity is not attractive due to low cost of steam produced from bark.

The saved steam is examined to be used in four alternatives, as illustrated in Fig. 8-24b-e.

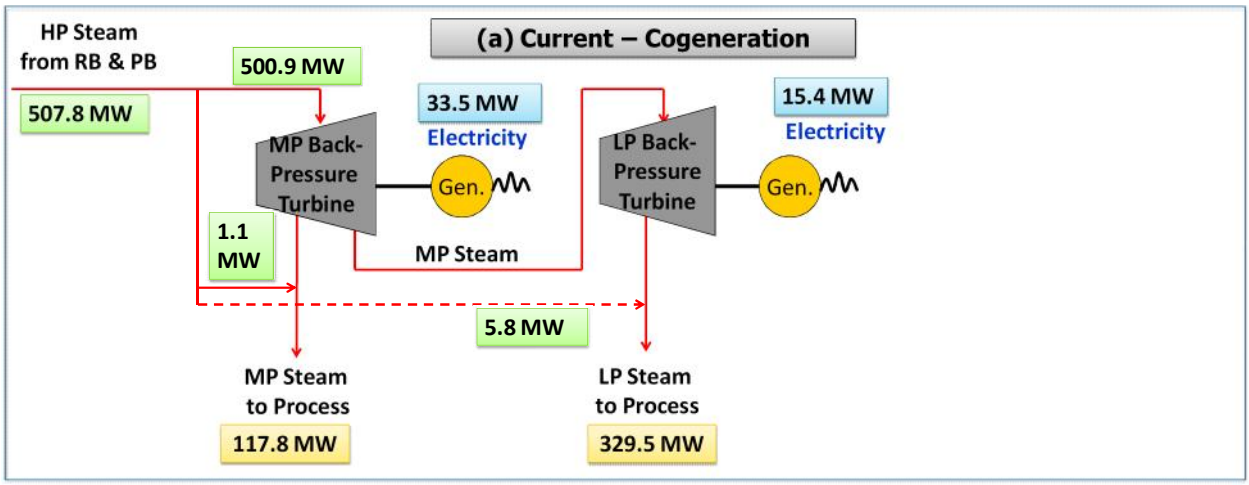
(a) Current – Cogeneration
HP Steam
from RB & PB
507.8 MW
500.9 MW
MP Back-
Pressure
Turbine
33.5 MW
Electricity
Gen.
MP Steam
LP Back-
Pressure
Turbine
15.4 MW
Electricity
Gen.
1.1
MW
5.8 MW
MP Steam
to Process
117.8 MW
LP Steam
to Process
329.5 MW

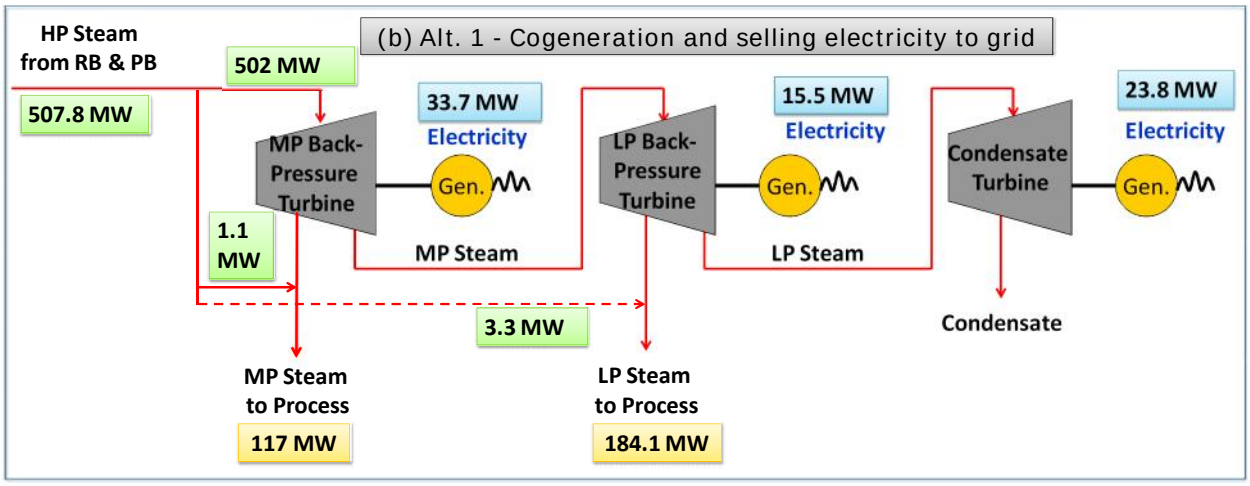
(b) Alt. 1 - Cogeneration and selling electricity to grid
HP Steam
from RB & PB
507.8 MW
502 MW
MP Back-
Pressure
Turbine
33.7 MW
Electricity
Gen.
MP Steam
LP Back-
Pressure
Turbine
15.5 MW
Electricity
Gen.
LP Steam
Condensate
Turbine
23.8 MW
Electricity
Gen.
Condensate
1.1
MW
3.3 MW
MP Steam
to Process
117 MW
LP Steam
to Process
184.1 MW

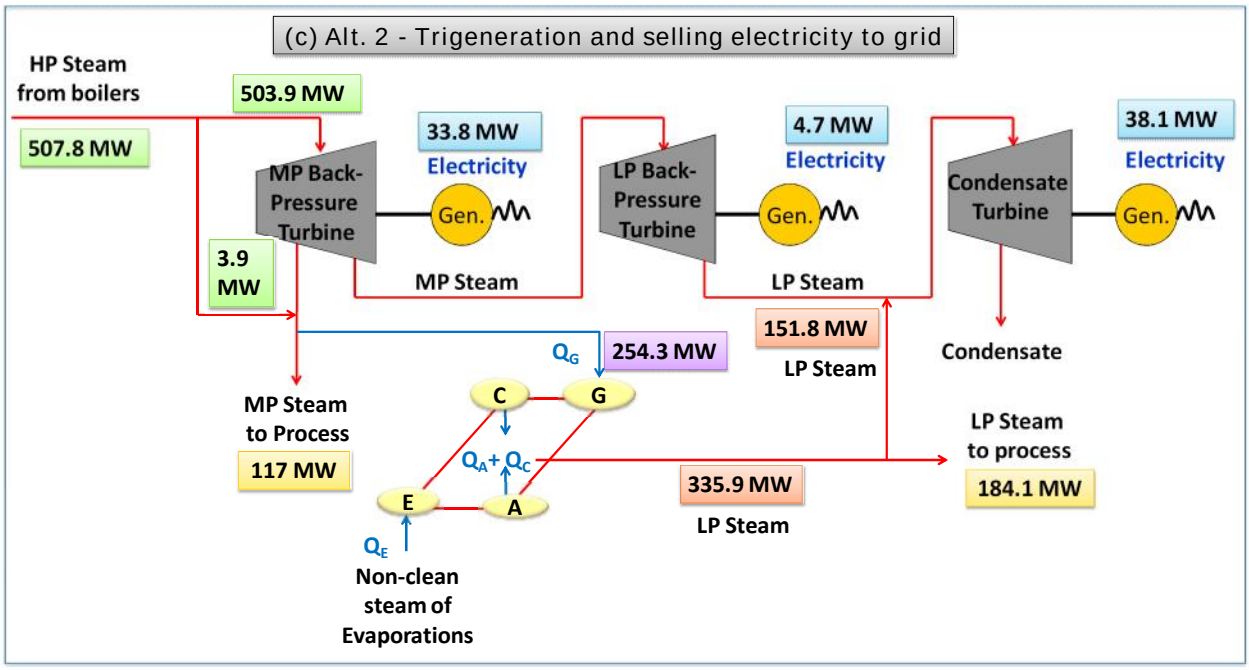
(c) Alt. 2 - Trigeneration and selling electricity to grid
HP Steam
from boilers
507.8 MW
503.9 MW
MP Back-
Pressure
Turbine
33.8 MW
Electricity
Gen.
MP Steam
LP Back-
Pressure
Turbine
4.7 MW
Electricity
Gen.
LP Steam
Condensate
Turbine
38.1 MW
Electricity
Gen.
Condensate
3.9
MW
151.8 MW
LP Steam
Q_G
254.3 MW
C
G
$Q_A + Q_C$
E
A
Q_E
MP Steam
to Process
117 MW
335.9 MW
LP Steam
LP Steam
to process
184.1 MW
Non-clean
steam of
Evaporations

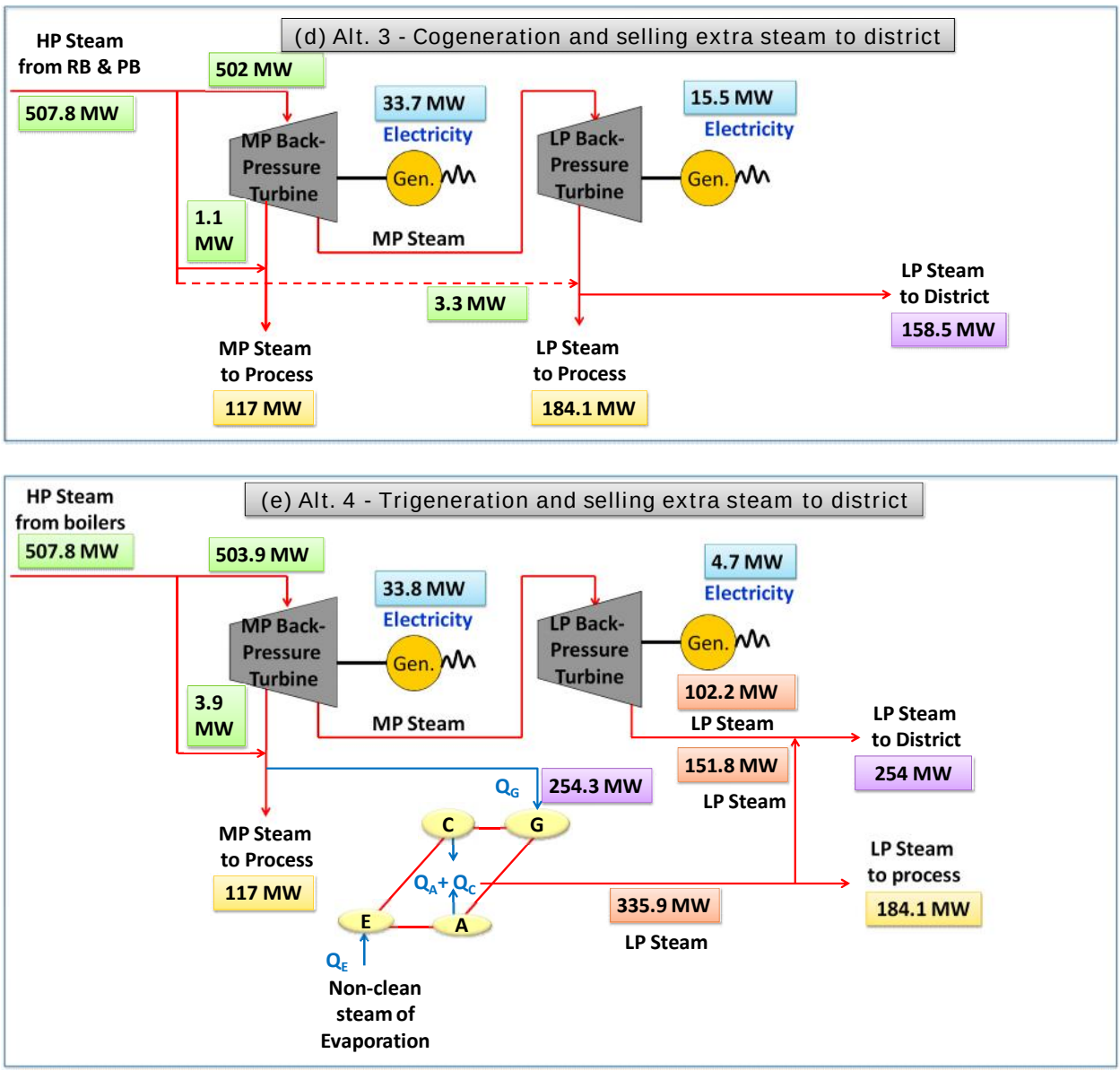

Fig. 8-24 - (a)Current cogeneration, (b) Alt. 1, (c) Alt. 2, (d) Alt. 3, (e) Alt. 4 – Mill B (G: generator, C: condenser, A: absorber, E, evaporator, Gen.: turbine generator)

In Alt. 1 (Fig. 8-24b) by installation of a condensing turbine on each line, 24.1 MW of extra electricity can be generated.

There is only one source of non-clean steam on each line (Fig. 8-24c) that can be utilized at the evaporator (E) of LiBr/H_2O AHP with the coefficient of performance (COP) of 1.55 (Marinova et al., 2007) and generate low pressure (LP) steam at the absorber (A) and condenser (C). These

non-clean steams are currently condensed at surface condensers of evaporations to produce warm water (Fig. 8-22 and 8-23). Therefore, to produce these warm waters, the adjustment to replace the non-clean steams with other heat sources is considered in the HEX network. The total MP steam of 254.3 MW from the MP back pressure turbines is used as the heat deriver at the generator (G) of AHPs and in total can save 81.6 MW (18%) of steam consumption. However, this excess saving does not result in significant extra electricity generation in comparison to Alt. 1 (27.7 vs. 24.1 MW). The reason for so little extra electricity generation is that the large quantity of MP steam is used to upgrade the heat at AHPs, and the quantity of steam towards LP back pressure turbine is reduced.

In Alt. 3 (Fig. 8-24d) all excess LP steam (158.5 MW) can be sold to district.

Alternative #4 (Fig. 8-24e) is similar to Alt. 2 (Fig. 8-24c) but instead of the installation of condensing turbines, the excess steam (254 MW) can be sold to the district.

The total capital cost of Alt. 1 is 12.57 M$ to purchase two new condensing turbines with 1170 k$/a of operating costs while the capital cost of the cogenerations and AHPs of Alt. 2 are respectively 21.6 and 109.41 M$ and add around 4.1 M$/a in operating costs. For Alt. 4, the capital and operating costs of AHPs are 109.41 M$ and 2.7 M$/a, respectively.

8.3.7 Economic analysis of four alternatives

The saved steam is used according to four alternatives (Fig. 8-24b-e). The following economic data of the mill and assumptions are employed for a profitability calculation on a 2012 basis:

- The price of electricity is 44 $/MWhr.
- The price of fresh water is 0.0175 $/m^3.
- The price for effluent treatment is 0.10 $/m^3.
- The selling price of electricity to the grid is 90 $/MWhr (Mateos-Espejel et al., 2011c).
- The selling price of steam to the local district is 4.17 $/GJ (Mateos-Espejel et al., 2011c).
- Number of operating days is 354 (Browne et al., 2011).

The total reduction in effluent production, water saving, extra electricity generation, and excess steam for selling are translated into costs and summarized in Table 8-11. In Alt. 1 and 2, selling

extra electricity and for Alt. 3 and 4, selling excess steam is the biggest portion of net profit. Purchasing new HEX area in both Alt. 1 and 3 is the main contributor to total capital cost while in the case of Alt. 2 and 4, the capital cost is three times more than the two other alternatives due to purchasing very expensive AHPs. If there is no market for the excess steam, Alt. 3 and 4 will be excluded and Alt. 1 as an extremely attractive option is proposed to be implemented. On the other hand, if there is a market for the excess steam, then Alt. 2 is the best one among the others in terms of the smallest capital cost (42.5 M$) and the shortest payback period (2.1a) and also in comparison with Alt. 1 could generate a higher profit (20.0 vs. 17.0 M$/a).

Table 8-11 - The economic benefit of savings from different resources – Mill B

	Effluent Reduction (m^3/h)	**Water saving (m^3/h)**	**Steam saving (MW)**	**Extra electricity generation for selling (MW)**	**Excess steam for selling (MW)**	**Effluent Reduction (M$/a)**	**Water saving (M$/a)**
Alt.1 – Cogeneration and selling extra electricity	706 (25%)	695 (24%)	146.2 (33%)	24.1	-	0.6	0.1
Alt. 2 – Trigeneration and selling extra electricity	706 (25%)	695 (24%)	228.9 (51%)	27.7	-	0.6	0.1
Alt. 3 – Selling excess steam to local district	706 (25%)	695 (24%)	146.2 (33%)	-	158.5	0.6	0.1
Alt. 4 – Trigeneration and selling excess steam to local district	706 (25%)	695 (24%)	228.9 (51%)	-10.4†	254	0.6	0.1

	Selling extra electricity (M$/a)	**Selling the excess steam (M$/a)**	**Purchasing extra electricity (M$/a)**	**Increase in operating cost (M$/a)**	**Net profit (M$/a)**	**Total Capital cost (M$)**	**Payback period (a)**
Alt.1 – Cogeneration and selling extra electricity	18.5	-	-	2.2	17.0	53.4	3.1
Alt. 2 – Trigeneration and selling extra electricity	21.2	-	-	5.2	16.7	173.1	10.4
Alt. 3 – Selling excess steam to local district	-	20.4	-	1.1	20.0	42.5	2.1
Alt. 4 – Trigeneration and selling excess steam to local district	-	32.4	3.9	3.8	25.4	151.9	6.0

†the excess steam is sold to the local district, the capacity of electricity generation is reduced and electricity deficit should be purchased from grid

8.3.8 Step 5: Implementation strategy

According to the profitability analysis, Alt. 1 and 3 are more promising for implementation. Since there is no fossil fuel saving, for both alternatives, one phase is employed, as shown in Table 8-12.

Table 8-12 - Strategy to implement Alt. 1 and 3 – Mill B

	Projects to be done	Steam saving (MW)	Capital cost (M$)	Net profit (M$/a)	Payback period (a)
Alt.1 – Cogeneration and selling extra electricity					
Phase 1: Extra electricity generation	1-All water reutilization 2-All performance improvements of equipments 3-HEXs of water network 4-HEXs of air network 5-Condensing turbines	146.2	53.4	17.0	3.1
Alt. 3 – Selling excess steam					
Phase 1: Excess steam selling	1-All water reutilization 2-All performance improvements of equipments 3-HEXs of water network 4-HEXs of air network 5-Selling steam to local district	146.2	42.5	20.0	2.1

8.3.9 Step 6: Post benchmarking

Figure 8-11 and 8-12 demonstrate the post-benchmarking results if all the projects are implemented. Figure 8-11 displays that the steam consumption at bleaching, the pulp machines, and other users has been significantly reduced and this has brought down the total steam consumption of the whole mill much lower than the 25th percentile of Canadian mills. Figure 8-12 also shows that the water consumption has been reduced at washing, bleaching, the pulp machine, and recausticizing.

The predicted scope for steam and water savings using Eqs [1] and [2] was respectively 38 and 24% and the final steam and water savings were respectively 33 and 24%, which are considerably close. This again proves the robustness of these equations for the calculation of scope.

8.4 Mill C

8.4.1 Step 2: Pre-benchmarking with current practices

The pre-benchmarking of steam and water consumption is illustrated in Fig. 8-25 and 8-26. Figure 8-25 shows that the steam consumption of the digesting department is much greater than the 75th percentile; however the identification of the saving potential requires in-depth analysis of the equipment of this department. This value for bleaching and chemical preparation and evaporation is reasonable. The steam consumption at the paper machine (PM) is higher than the 75th percentile because water at low temperature is supplied to the PM and results in the low

temperature of white water that leaves the machine. This white water is recycled to the PM and to maintain its temperature a significant amount of steam is injected into the white water tank. This steam can be reduced or removed by providing higher temperature water to the PM. The total steam consumption of the mill stands above the 75th percentile of Canadian mills and, therefore, there is room for improvement.

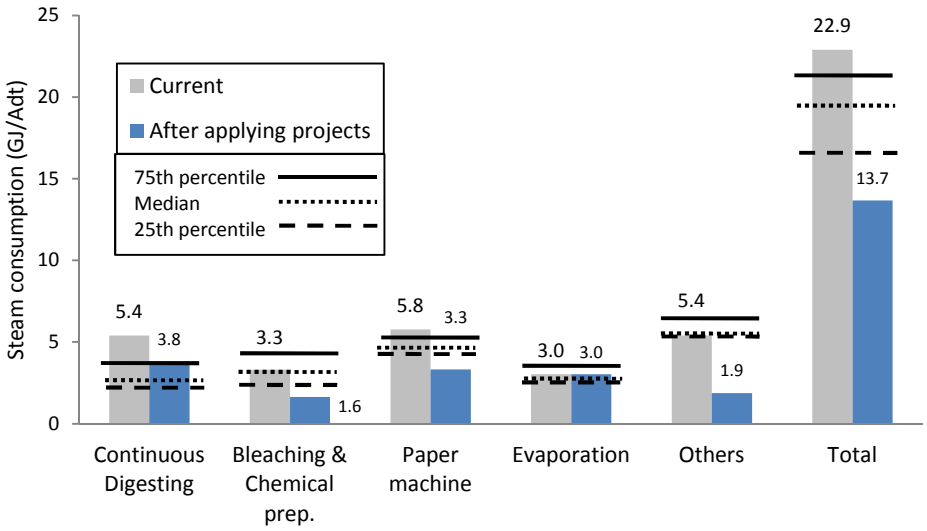

Fig. 8-25 – Steam consumption of main departments and complete mill – current and after applying projects

Figure 8-26 shows that the water consumption of the washing is considerably high due to poor countercurrent filtrate reuse. In addition, hot water is utilized to maintain the temperature of the filtrate tank of washers #3 and 4 at 37.6^{o}C (Fig. 8-28a). The white water is not reutilized efficiently at other departments, which causes the large effluent production from the filtrate tank of the paper machine (Fig. 8-29a). Therefore, applying the process integration could significantly reduce the water consumption and effluent production in this mill. It should be noted that the total water consumption and effluent production are 1760 and 1720 m^3/h (Table 3-1), but in Fig. 8-26, in terms of m^3/Adt, they are different. The reason is that the base for calculation of m^3/Adt in digesting, washing, bleaching, the steam plant, and chemical preparation is the total Kraft production (280 Adt/d) while for the paper machine it is the total mixture of Kraft and

mechanical production (700 Adt/d) and for mechanical it is the total mechanical pulping production (420 Adt/d).

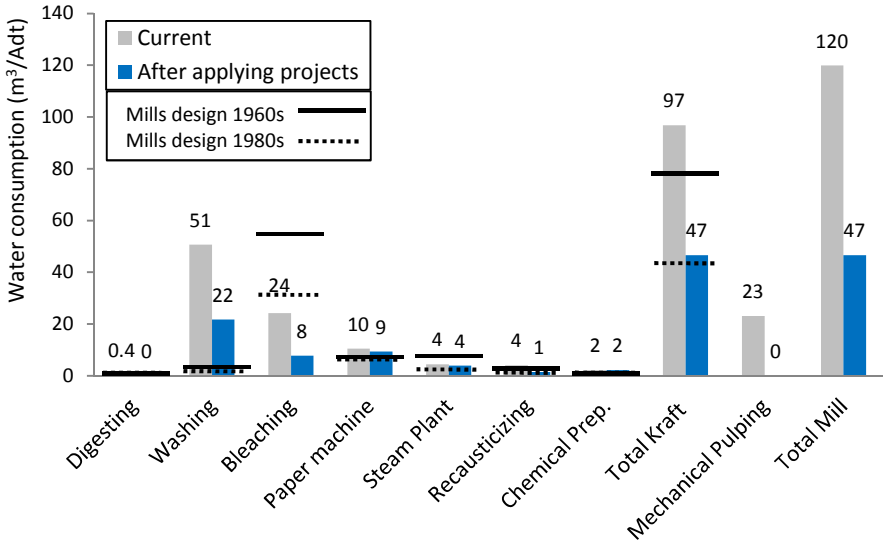

Fig. 8-26 - Water consumption – current and after applying projects

Based on Eqs [1] and [2], the scope for steam and water savings is 41% and 54%, respectively.

8.4.2 Changes in Water Reutilization Network (Step 3-1: SEWNA)

The Water & Energy Pinch curves for all sinks and sources are constructed in Fig. 8-27. Figure 8-27a shows the raw data before reutilization while Fig. 8-27b displays the final results after water reutilization.

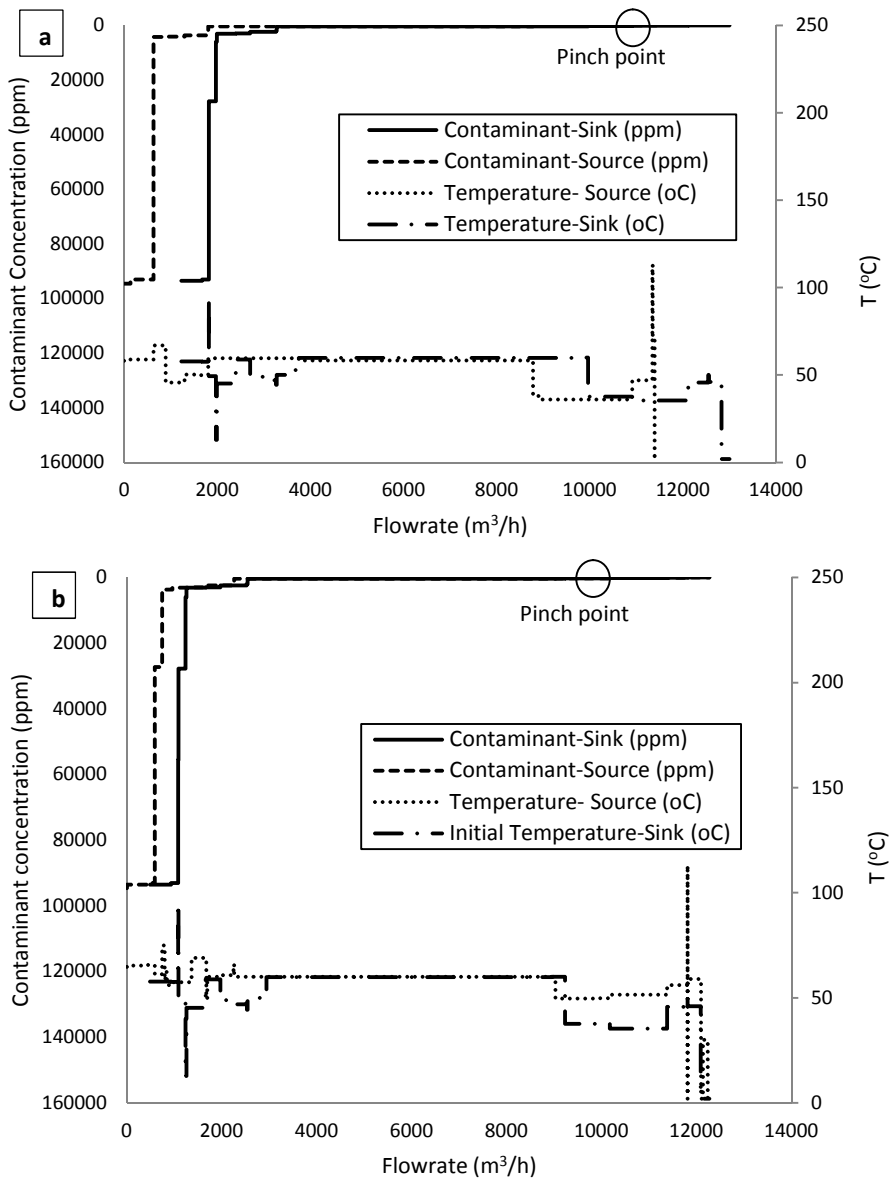

Fig. 8-27 – Water & Energy Pinch Curves, (a) before water reutilization, (b) after water reutilization – Mill C

The final changes in water utilization and filtrate reutilization of the whole mill is demonstrated in Fig. 8-28b to 8-30b. Dashed purple lines show the change in the flowrate of existing connections and the dotted red lines show the new connections. The total number of changes that is carried out in the flowrate of existing connections is 11 while 13 new connections for filtrate reutilization should be implemented. Total water savings is 994 m^3/h that accounts for 57% of current water consumption at both mechanical and Kraft pulping. The total effluent decreases by 982 m^3/h or 58% of current effluent production.

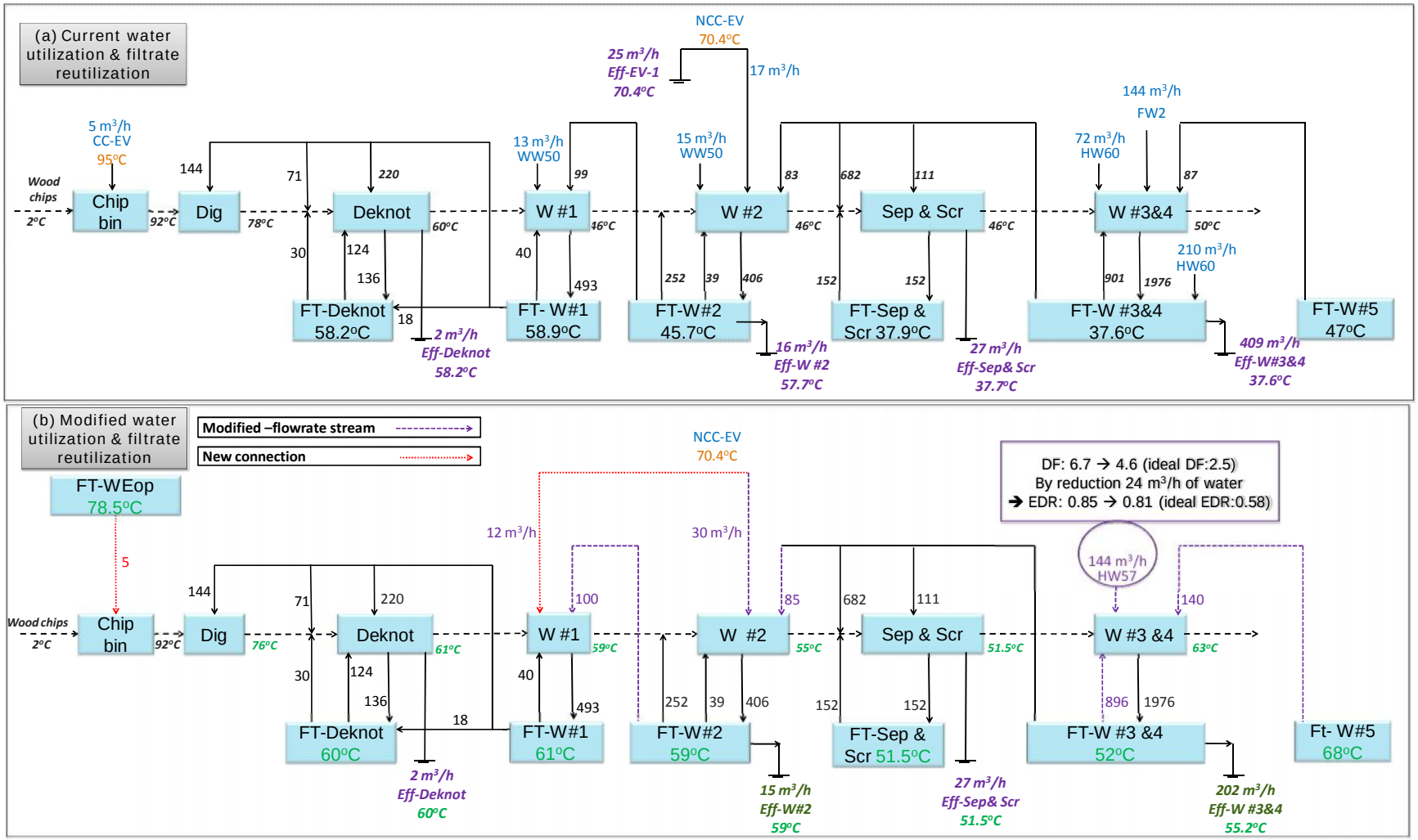

Fig. 8-28 – (a) current, (b) final water utilization and filtrate reutilization in digesting and washing departments – mill C; dotted red lines: new connections; dashed purple lines: the existing connections with change in flowrate (W: washer, FT: filtrate tank, Sep & Scr.: separators and screeners, Dig: digester, Deknot: deknotters, NCC-EV: non-clean condensate of evaporation, WW: warm water: FW: fresh water: HW: hot water, Eff.: effluent)

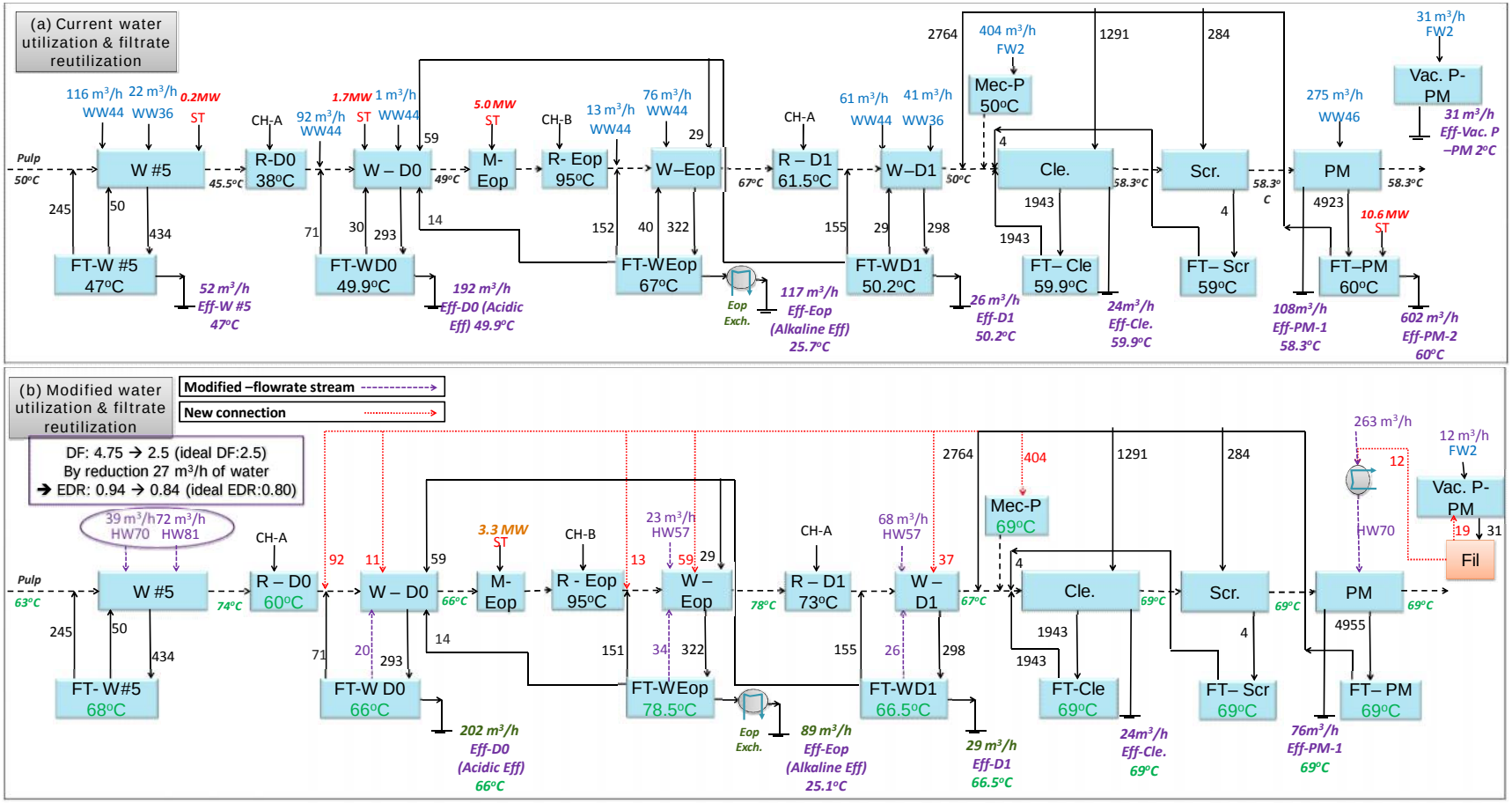

Fig. 8-29 - (a) Current, (b) final water utilization and filtrate reutilization in bleaching and paper machine departments – mill C; dotted red lines: new connections; dashed purple lines: the existing connections with change in flowrate (W: washer, R: reactor; M: steam mixer, FT: filtrate tank, Mec.-P: mechanical pulping, Cle.: cleaners, Scr.: screeners, PM: paper machine, Vac. P: vacuum pump, Fil: filter, WW: warm water: FW: fresh water: HW: hot water, CH-A: acidic chemicals, CH-B: base chemicals, ST: steam, Eff.: effluent)

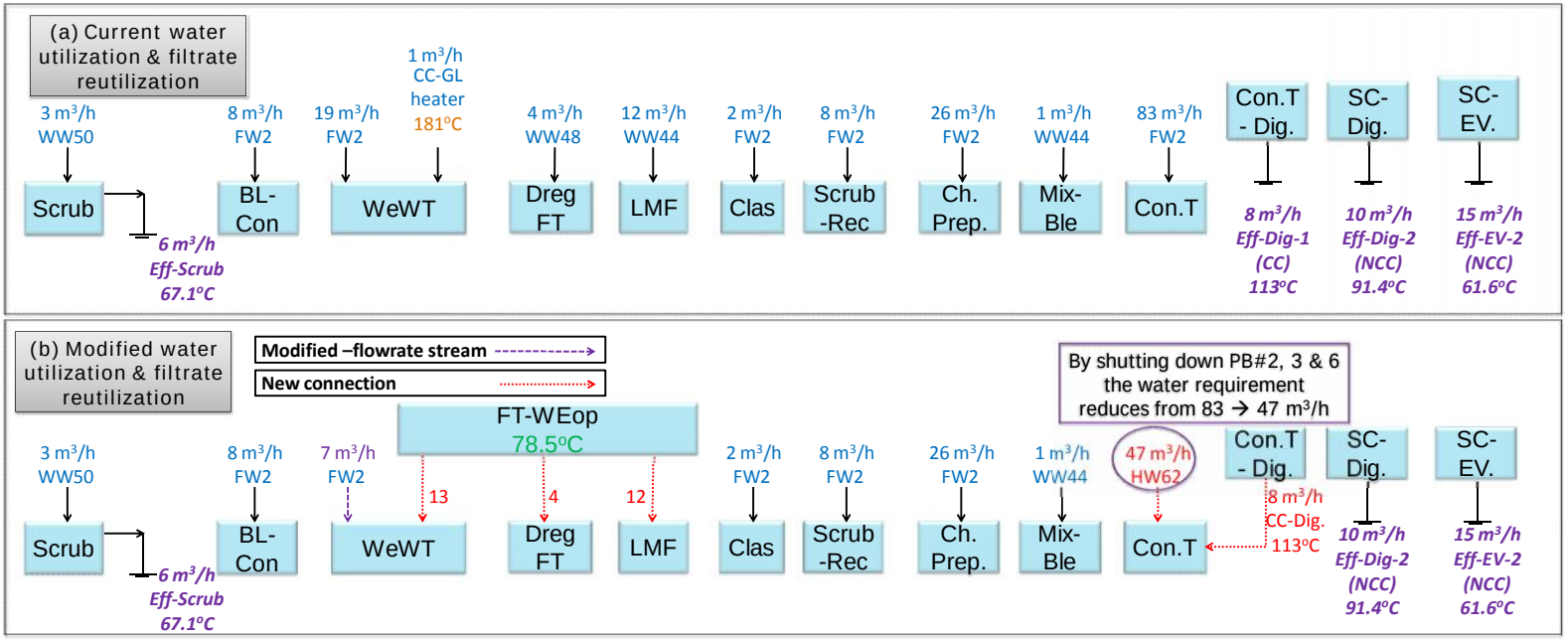

Fig. 8-30 - (a) current, (b) final water utilization and filtrate reutilization in scrubber, recausticizing, chemical preparation, and steam plant department, - mill C; dotted red lines: new connections; dashed purple lines: the existing connections with change in flowrate (Scrub: scrubber, BL-Con: black liquor concentrator, WeWT: weak wash tank, Dreg FT: dreg filter, LMF: lime mud filter, Clas: classifier, Scrub-Rec: scrubber of recauticizing, Ch. Prep.: chemical preparation, Mix-Ble: mixer-bleaching, Con. T: condensate tank, Con. T-Dig.: condensate tank of digesting, SC-Dig.: surface condenser of digesting, SC-EV.: surface condenser of evaporation, WW: warm water: FW: fresh water: HW: hot water, CH-A: acidic chemicals, CH-B: base chemicals, ST: steam, Eff.: effluent)

8.4.3 Synthesis of the performance improvement projects (Step 3-2: EPA)

The synthesis of all projects is summarized in Table 8-13. There are seven performance improvement projects: one in the digesting department, two in the washing department, and four in the steam plant (three for the boilers and one for the deaerator). The projects for washers #3 and 4 (a), washer #5 (b), and deaerator (c) have already been incorporated in water network changes, as shown in Fig. 8-28b to 8-30b.

Table 8-13 – Summary of the performance improvement projects – Mill C

#	Project name	Probable remedial solution	Consequence of project on the process	Saving / increase*	
				Steam (MW)	Water (m^3/h)
1	Digesting department	Reduce the heat loss by improving the maintenance	-Reduction of steam consumption	+5.2*	-
a	Washers #3 & 4	Reduce the DF from 6.7 to 4.6 (ideal DF=2.5)	-Reduction of hot water consumption	-	+24
			-Increase the quantity of black liquor to recovery boiler from 813 to 818 t/d and increase steam production at RB	+1.8	-
b	Washer #5	Reduce the DF from 4.75 to 2.5 (ideal DF=2.5)	-Reduction of warm water consumption	-	+27
2	Recovery boiler	Reduce the heat loss by improving the maintenance	-Increase steam production	+16.9	-
			-Increase fresh water consumption at deaerator -Increase steam consumption at deaerator	-3.7*	-20
3	Power boiler #1	Reduce the heat loss by improving the maintenance	-Increase steam production	+1.1	-
			-Increase fresh water consumption at deaerator -Increase steam consumption at deaerator	-0.2	-1
4	Power boiler #2	Reduce the heat loss by improving the maintenance	-Increase steam production	+3.7	-
			-Increase fresh water consumption at deaerator -Increase steam consumption at deaerator	-0.9	-5
5	Deaerator	Flash blowdown and inject the produced steam to deaerator	-Reduction of steam consumption at deaerator	+2.9	-
c	Deaerator	Replace fresh water to the deaerator with saved hot and warm water of washers#3,4,5	-Reduction of steam consumption at deaerator	+1.0	-
	Total			+27.8	+25

*Plus (+) means increase in steam generation at boiler, steam saving, and water saving; minus (-) means increase in steam or water consumption

8.4.4 HEX network changes (Step 3-3: R-HEN)

8.4.4.1 Targeting

The steam consumption of current conditions, after applying SEWNA and EPA, and also after performing the targeting stages for five different categories of steam users is presented in Table 8-14. The results show that six NRHS-SH heaters (Table 8-14a) consume 41.5 MW of steam and after performing EPA is reduced to 40.9 MW and cannot be replaced by other heat sources.

There are six RHS-SH heaters (Table 8-14b) where the steam has been reduced from 22.3 to 15.6 MW using two other methods (SEWNA and EPA) and the remainder also can be replaced by other heat sources. In the case of steam injection points, there is just one FHexHS-SI (Table 8-14c) that was completely eliminated using SEWNA. At the two NRHS-NFHexHS-SI points (Table 8-14d), the steam consumption has been lowered from 11.5 to 6.9 MW using EPA but the remainder cannot be reduced using the HEN design. The total number of RHS-NFHexHS-SI points is five and steam has been decreased from 26 to 20.4 MW using two other methods (SEWNA and EPA). It can potentially be dropped to 9.0 MW by targeting new temperatures for the water to the pulp line. However, there is no need to target the temperature of the air to the boilers and dryers due to the current temperature of the air inlet, which is high enough for these air users.

Table 8-14 – The steam consumption of current situation, after applying SEWNA, EPA and also the potential for steam reduction using R-HEN and final steam consumption after HEX network design for all steam users of the mill – Mill C

#	Equipment	Current (MW)	After SEWNA (MW)	After EPA (MW)	Potential using R-HEN (MW)	Final after HEX network design (MW)
(a) Non-Replaceable Heat Source-Steam Heater (NRHS-SH)						
1	Upper heater – Digesting	3.8	3.8	3.4	3.4	3.4
2	Lower heater – Digesting	2.2	2.2	2.0	2.0	2.0
3	NaClO3 heater #1 &2 – Chem. Prep.	0.1	0.1	0.1	0.1	0.1
4	Chemical reboiler – Chem. Prep.	1.6	1.6	1.6	1.6	1.6
5	Dryer – PM	24.0	24.0	24.0	24.0	24.0
6	Evaporation	9.8	9.8	9.8	9.8	9.8
Total NRHS-SH		***41.5***	***41.5***	***40.9***	***40.9***	***40.9***
(b) Replaceable Heat Source – Steam Heater (RHS-SH)						
1	Glycool loop – PM	7.6	2.3	2.3	0	0
2	Air heater - PM	4.6	4.6	4.6	0	3.0
3	Green liquor heater – Recaust.	1.1	1.1	1.1	0	0
4	Air heater – RB	6.8	6.8	6.8	0	1.8
5	Air heater – PB#3	1.9	1.9	1.9	0	0
6	Water heater – Chem. Prep.	0.3	0	0	0	0
Total RHS- SH		***22.3***	***15.6***	***15.6***	***0***	***4.8***
(c) Feasible HEX Heat Sink – Steam Injection (FHexHS-SI)						
1	Silo cheat - PM	10.6	0	0	0	0
Total FHexHS-SI		***10.6***	***0***	***0***	***0***	***0***
(d)Non-Reducible Heat Source– Non-Feasible HEX Heat Sink – Steam Injection (NRHS-NFHexHS-SI)						
1	Chip bin – Digesting	5.4	5.4	3.5	3.5	3.5
2	Steaming vessel – Digesting	6.1	6.1	3.4	3.4	3.4
Total NRHS-NFHexHS-SI		***11.5***	***11.5***	***6.9***	***6.9***	***6.9***
(e)Reducible Heat Source– Non-Feasible HEX Heat Sink – Steam Injection (RHS-NFHexHS-SI)						
1	Pre-D0 washer – Bleaching	0.2	0	0	0	0
2	D0 washer – Bleaching	1.7	0	0	0	0
3	Eop – Bleaching	5.0	4.3	4.3	2.4	3.3
4	WW production at steam ejector condenser – Chem. Prep.	1.8	0.3	0.3	0.3	0.3
5	Deaerator – Steam plant	17.3	14.9	15.8	6.3	5.7
Total NRHS-NFHexHS-SI		***26.0***	***19.5***	***20.4***	***9.0***	***9.3***

Table 8-15 presents the aggregate results of the theoretical minimum steam requirement (TMinSR) and theoretical maximum steam saving (TMaxSS) for all five categories as well as the complete mill. The results suggest that by applying SEWNA and EPA, 25% of current steam consumption has already been saved and 24% also can potentially be saved by means of R-HEN while at least 51% of current steam consumption is necessary and should be used by the current steam users.

Table 8-15 – The aggregation of all types of steam users for the current situation, after applying NSWEA and EPA and the targeting and final of steam saving by means of R-HEN – Mill C

#	Type of steam user		Current (MW)	After SEWNA (MW)	After EPA (MW)	TMinSR* using R-HEN (MW)	Final SR after HEX network design (MW)	TMaxSS† using R-HEN (MW)	Final SS using HEX network design (MW)
1	Steam	NRHS-SH	41.5	41.5	40.9	40.9	40.9	0	0
2	heater	RHS-SH	22.3	15.6	15.6	0	4.8	15.6	10.8
3	Steam	FHexHS-SI	10.6	0	0	0	0	0	0
4	injectio	NRHS-NFHexHS-SI	11.5	11.5	6.9	6.9	6.9	0	0
5	n	RHS-NFHexHS-SI	26.0	19.5	20.4	9.0	9.3	11.4	11.1
Total (MW)			***111.9***	***88.1***	***83.8***	***56.8***	***61.9***	***27.0***	***21.9***
Percentage over current consumption			***-***	***79%***	***75%***	***51%***	***55%***	***24%***	***20%***

*TMinSR: Theoretical Minimum Steam Requirement
†TMaxSS: Theoretical Maximum Steam Saving

8.4.4.2 HEX network

A part of the existing HEX network that undergoes the modifications is displayed in Fig. 8-31a and 8-32a. The existing HEX network consists of preheating the air and the warm/hot water production network using the process streams HEXs and the air and water heaters. Figures 8-31b and 8-32b illustrate the final HEX network after applying the HEN design algorithm (Fig. 7-6).

Figure 8-31b shows the new HEN to pre-heat the air for the boilers and dryer. The total new HEXs that should be purchased are one condenser for the condensing turbine and one air economizers to pre-heat the air for the dryer and recovery boiler (RB). It should be noted that all natural gas power boilers (PB #2, 3, and 6) are shut down using saved steam and this is the reason for not being included in Fig. 8-31b.

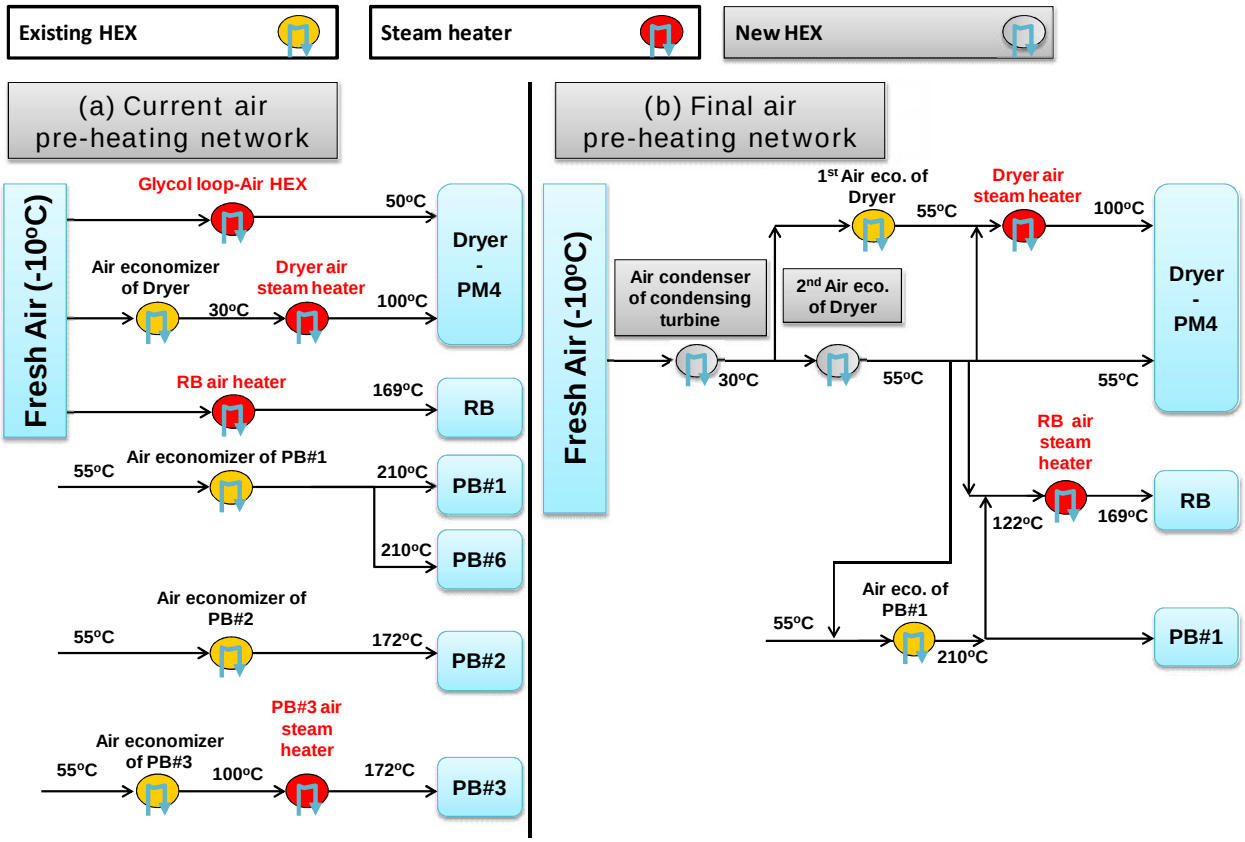

Fig. 8-31 - (a) Current and (b) final air pre-heating network after applying SWAEI methodology – mill C (RB: recovery boiler, PB: power boiler, PM: paper machine, eco.: economizer)

Figure 8-32b illustrates the new HEN for the warm/hot water production network. The total new HEXs for the water production network are four while the area of two existing HEXs should be enlarged. The new temperatures of hot and warm water have been incorporated in the water utilization network of Fig. 8-28b to 8-30b. In addition, four blowdown HEXs should be relocated to preheat the demineralised water for the condensate tank of the steam plant by recovering the heat of the blowdown water of RB and PB#1.

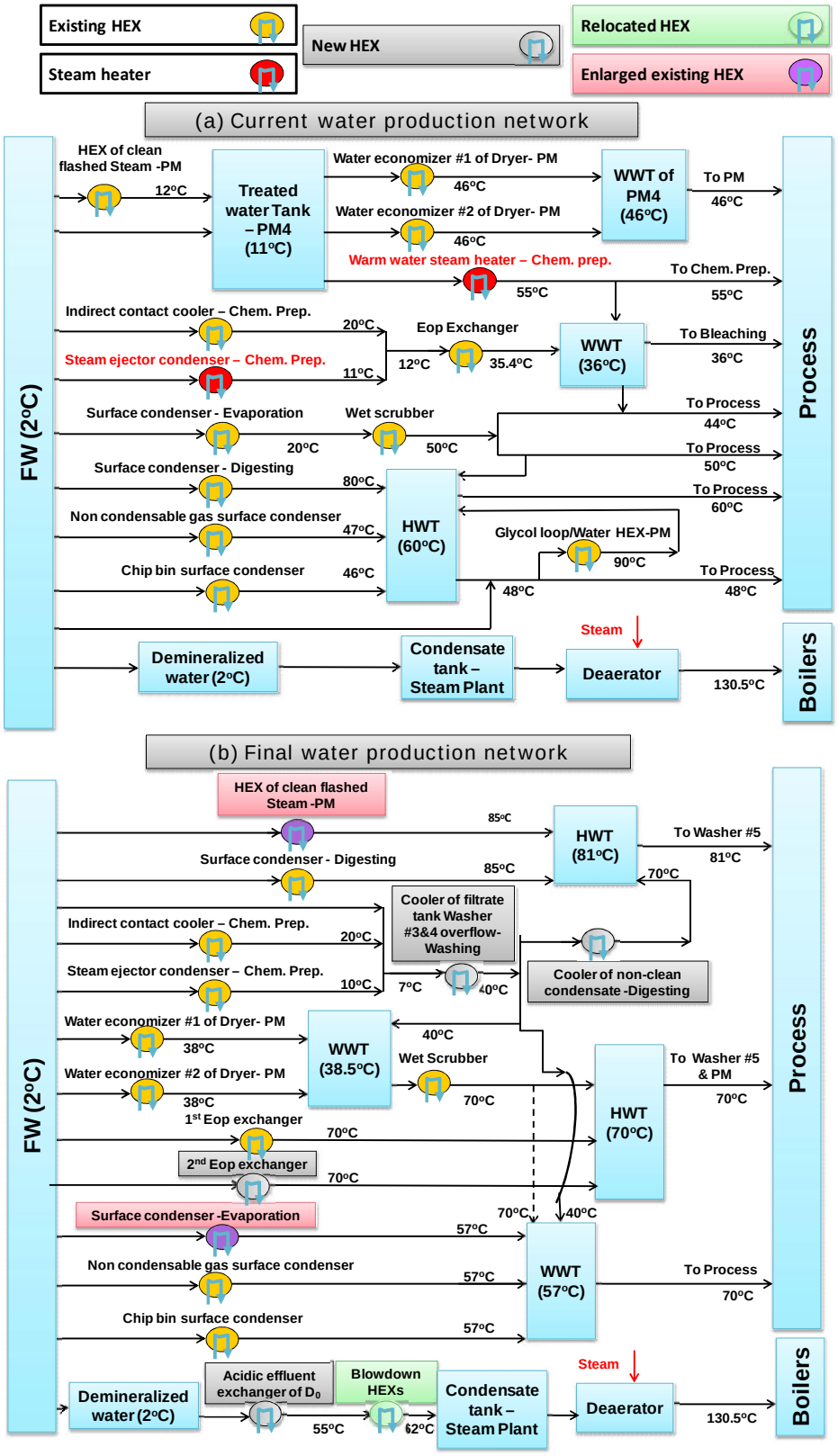

Fig. 8-32 - (a) Current and (b) final water production network after applying SWAEI methodology – mill C (WWT: warm water tank, HWT: hot water tank, chem. Prep.: chemical preparation, RB: recovery boiler, PB: power boiler)

8.4.4.3 Steam saving

Table 8-14 presents the final steam consumption for all five categories of steam users. The results show that at RHS-SH, the estimation was to replace the steam with other heat sources, but in practice for 4.8 MW of steam at the air heater-PM and air heater-RB, the goal cannot be achieved; however, the steam saving is still significant (10.8 MW). At RHS-NFHexHS-SI, the steam injection can be reduced by 11.1 MW while the estimation was 11.4 MW, which are substantially close to one another.

Table 8-15 displays the final steam requirement after the final HEN design. It also shows the estimated steam saving using the R-HEN approach and final steam savings after the final network design. The total steam saving using R-HEN is considerably high and accounts for 20% of current steam consumption of the mill. The saving when it is added to ones that have been achieved by SEWNA and EPA (25%) comes to 45% of current steam consumption, which is extremely high. The results also show that the theoretical maximum steam saving (TMaxSS) is considerably close to the final steam saving (24 vs. 20%).

8.4.5 Summary of improvements

Table 8-16 presents the total number of projects, the increase in steam production, and steam and water savings. In addition, capital cost requirements for piping in the water network from the SEWNA, the improvement of equipment and departments using EPA, and the installation of the new HEX area by means of R-HEN are shown. The operating costs related to the performance changes and the new HEX area are also calculated. The excess steam consists of an increase in steam generation at the boilers and steam saving. It is 73.5 MW that accounts for 66% of current steam consumption. The total water saving is 1019 m^3/h or 58% of current water consumption. These 30 projects entail 9.54 M$ in capital costs and add 338 k$/a (0.34 M$/a) to the operating costs of the mill.

Table 8-16 – Summary of improvements applying three process integration techniques in sequence – Mill C

Step of Methodology	Number of projects	Increase in steam generation at the boilers		Steam saving		Water saving		Capital cost	Operating cost
		MW	%	MW	%	m^3/h	%	M$	k$/a
NSWEA	14	-	-	23.8	21	994	57	1.72	-
EPA	5	23.5	21	4.3	4	25	1	1.26	174
R-HEN	12	-	-	21.9	20	-	-	6.56	164
Total	**31**	**23.5**	**21%**	**50**	**45%**	**1019**	**58%**	**9.54**	**338**

8.4.6 Step 4: Energy Upgrading and Conversion

The excess steam is used to shut down all three natural gas (NG) power boilers that produce 64.5 MW of steam. Since the quantity of excess steam after shutting down the NG boilers and excluding the need of mill is not sufficient for exporting to the local district, the two alternatives of selling steam are excluded from the study for this mill. Therefore, the two other alternatives, including cogeneration only and trigeneration, are examined and illustrated in Fig. 8-33. In the current configuration of the steam plant of the mill, there is no installed turbine and, hence, there is no necessity to generate high pressure (HP) steam at the boilers. Herein, in both configurations, it has been assumed that the mill is able to produce the HP steam rather than the existing medium pressure (MP) steam.

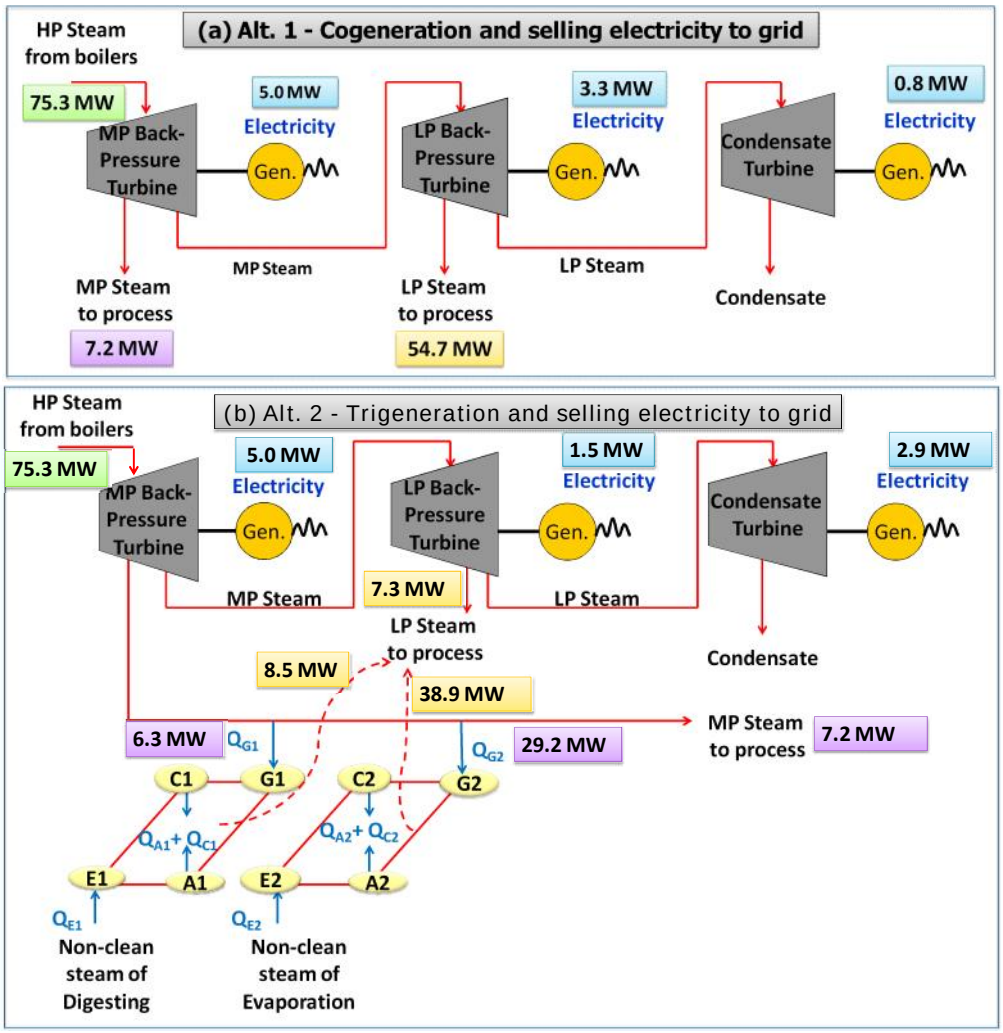

Fig. 8-33 - (a)Alt. 1 – Cogeneration and selling electricity to the grid, (b) Alt. 2 – trigeneration and selling electricity to the grid – mill C (G: generator, C: condenser, A: absorber, E, evaporator, Gen.: turbine generator)

In Alt. 1 (Fig. 8-33a) with the installation of the MP and LP back-pressure turbines and condensing turbine, 9.1 MW of electricity can be generated.

There are two sources of non-clean steams (Fig. 8-33b) that can be utilized at the evaporator (E_1 or E_2) of LiBr/H_2O AHP with the coefficient of performance (COP) of 1.55 (Marinova et al., 2007) and generate low pressure (LP) steam at the absorber (A_1 or A_2) and condenser (C_1 or C_2). These non-clean steams are currently condensed at the surface condensers of evaporation and digesting to produce hot and warm water (Fig. 8-32). Therefore, to produce these hot and warm waters, the adjustment to replace the non-clean steams with other heat sources is considered. The MP steam (35.8 MW) from the MP back pressure turbine is used as the heat driver at the generator (G_1 or G_2) of AHPs and in total can save 11.9 MW (10%) of steam consumption.

However, this excess saving does not result in significant extra electricity generation in comparison to Alt. 1 (9.4 vs. 9.1MW). In this sense, Alt. 1 is more attractive for implementation; however, the economic aspects of both alternatives are presented in next section.

The total capital cost of Alt. 1 is 7.73 M$ to purchase three turbines with 456 k$/a of operating costs while the capital cost of the cogenerations and AHPs of Alt. 2 are respectively 9.29 and 20.85 M$ and add approximately 1.0 M$/a in operating costs.

8.4.6.1 Economic analysis of two alternatives

As mentioned earlier, the excess steam of 73.5 MW can be used to eliminate the need for fossil fuel consumption. The natural gas power boilers #2, #3, and #6 that respectively generate 18.7, 27.7, and 18.1 MW steam can be completely shut down, so the total natural gas saving is 6520 GJ/d. The remainder of steam is used according to two alternatives (Fig. 8-33). The following economic data of the mill and also some assumptions are employed for the profitability calculation on the 2012 basis:

- The natural gas price is 6.0 $/GJ.
- The price of fresh water is 0.0175 $/m^3.
- The price for effluent treatment is 0.069 $/m^3.
- The selling price of electricity to the grid is 90 $/MWhr (Mateos-Espejel et al., 2011c).
- Number of operating days is 354 (Browne et al., 2011).

The total reduction in effluent production, water and natural gas savings, and electricity generation are translated into costs and summarized in Table 8-17. The natural gas saving is the biggest portion of net profit in both alternatives. Purchasing the new HEX area and turbines in Alt. 1 are the main contributors to total capital costs. The capital cost of Alt. 2 is more than twice that of Alt.1 and it is due to purchasing very expensive AHPs. The payback period of Alt. 1, which is the installation of cogeneration and selling electricity to the grid, is attractively short and takes 0.8a to recover all the capital costs. On the other hand, the payback period of Alt. 2 with trigeneration and selling electricity to the grid is slightly shorter than two years (1.9a). Therefore, the short payback period, low capital cost, and higher net profit make Alt. 1 extremely attractive for investment.

Table 8-17 –The economic benefit of savings from different resources – Mill C

	Effluent Reduction (m^3/h)	Water saving (m^3/h)	Excess Steam (MW)	NG saving (GJ/d)	Electricity generation (MW)	Effluent Reduction (M$/a)	Water saving (M$/a)
Alt. 1	1007 (59%)	1019 (58%)	73.5 (66%)	6520	9.1	0.6	0.2
Alt. 2	1007 (59%)	1019 (58%)	85.4 (76%)	6520	9.4	0.6	0.2

	NG saving (M$/a)	Electricity selling (M$/a)	Increase in operating cost (M$/a)	Net profit (M$/a)	Total Capital cost (M$)	Payback period (a)
Alt. 1	13.8	7.0	0.8	20.8	17.3	0.8
Alt. 2	13.8	7.2	1.4	20.4	38.9	1.9

The results are compared with the previous study (Mateos-Espejel et al., 2011c), which used the traditional Thermal and Water Pinch Analyses in combination in the framework of unified methodology. They applied this method to a similar Kraft mill (700 Adt/d pulp production) in terms of water and steam consumption. The water consumption was 110 m^3/Adt and a saving of 34% was achieved while in the case of mill C, a saving of 59% (Table 8-17) was realized. The steam consumption was also 21.1 GJ/Adt and a saving of 27% was accomplished whereas in the case of mill C, 66% of excess steam was obtained. This shows that the results of the SWAEI methodology are substantially superior to other similar studies using other methodologies.

8.4.7 Step 5: Implementation strategy

According to the profitability analysis, the Alt. 1 is more promising for implementation. To implement all energy and water projects and the cogeneration that are involved in Alt. 1, a two-phase strategy is employed (Table 8-18):

Phase 1: Elimination of natural gas consumption from power boilers

To perform this phase, all water reutilization projects that have been shown in Fig. 8-28 to 8-30, all performance improvement projects that have been presented in Table 8-13 and also the HEX network of the water production network that has been illustrated in Fig. 8-32 should be implemented. These projects require 6.0 M$ of investment costs and will lead to 64.6 MW of excess steam and result in 14.4 M$/a net profit with the short payback period of 0.4a (Table 8-18).

Phase 2: Electricity generation

The HEX network of the air production network that was shown in Fig. 8-31 is proposed to be implemented in this phase. This results in 8.9 MW of additional steam saving. The steam is used to generate 9.1MW electricity by installing three turbines as shown in Fig. 8-33a. The electricity is assumed to be sold to the grid and generate new profit of 6.4 M$/a. Implementation of this phase entails 11.3 M$ of investment for HEXs and turbines and the payback period is 1.8a, which is much longer than phase 1. However, the combination of the two phases leads to a short payback period of 0.8a.

Table 8-18 - Strategy to implement Alt. 1

	Projects to be done	Steam saving (MW)	Capital cost (M$)	Net profit (M$/a)	Payback period (a)
Phase 1: elimination of NG consumption	1-All water reutilization 2-All performance improvements of equipments 3-HEXs of water network	64.6	6.0	14.4	0.4
Phase 2: electricity generation	4-HEXs of air network 5-Cogeneration	8.9	11.3	6.4	1.8
	Total	**73.5**	**17.3**	**20.8**	**0.8**

8.4.8 Step 6: Post benchmarking

Figures 8-25 and 8-26 demonstrate the post-benchmarking results if all the projects are implemented. Figure 8-25 displays that the steam consumption at digesting, bleaching, the paper machine, and other users has been significantly reduced and this has brought the total steam consumption of the mill much lower than the 25th percentile of Canadian mills. Figure 8-26 also shows that the water consumption has been considerably reduced at the washing and bleaching of Kraft pulping. The total water consumption of the Kraft process has been brought close to average mills designed in the 1980s. In addition, the total water consumption of the mill has been reduced due to a significant reduction of water consumption in the mechanical pulping section.

The predicted scope for steam and water savings using Eqs [1] and [2] was respectively 41 and 54% and the final steam and water savings were 45 and 58%, which are considerably close. This shows that these equations are reliable for the calculation of scope.

8.4.9 Comparison of stand alone techniques and SWAEI methodology

Three stand alone techniques (SEWNA, EPA, and R-HEN) have already been applied to mill C in previous chapters (5, 6, and 7). The results of SWAEI methodology and stand alone techniques are compared in Fig. 8-34. The graph shows that the excess steam, including steam saving and an increase in steam generation at the boilers, are improved significantly by coupling these three techniques compared to engaging them separately. In addition, the capital cost requirement is slightly bigger for SWAEI compared to R-HEN, because cogeneration requires 7.7 M$. If this cost is excluded from the total cost of SWAEI, the capital cost from HEXs, water reutilization, and performance improvement projects would be 9.6 M$, which is less than the capital cost of R-HEN because some of the improvements are done in SEWNA and EPA. In addition, most of the elimination or reduction of non-isothermal mixing (NIM) is carried out in SEWNA. Therefore, it is not necessary to purchase many new HEXs to recover the heat and also eliminate or reduce NIM. The net profit is furthermore significantly larger when three techniques along with cogeneration are performed together due to the elimination of fossil fuel and electricity generation while in a separate application, only a part of fossil fuel can be reduced. These differences make the shorter payback period for the SWAEI methodology in comparison to case of R-HEN.

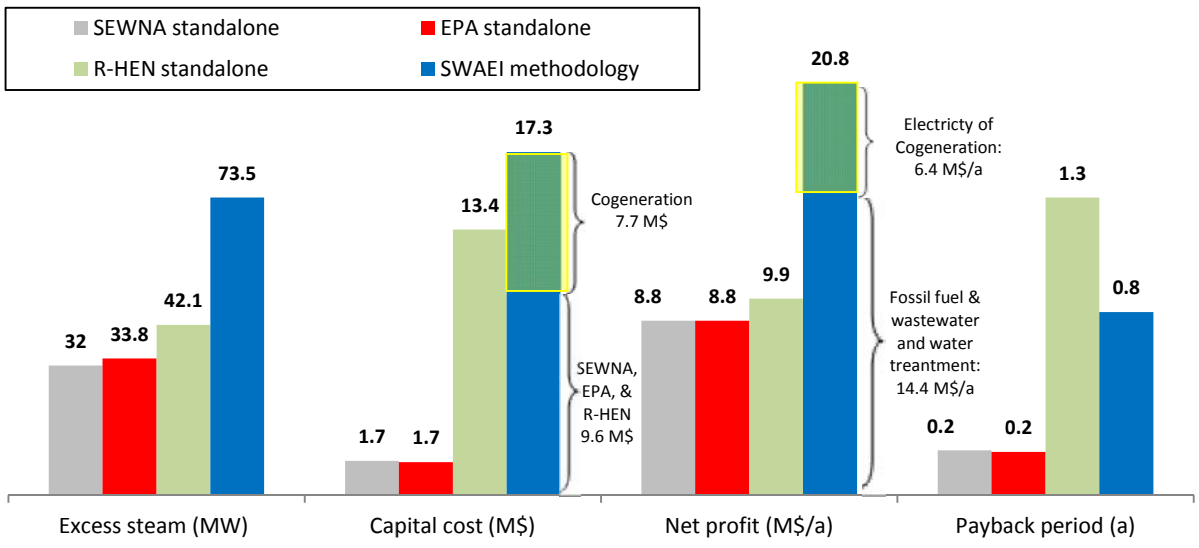

Fig. 8-34 – Comparison between the results of applying three techniques stand alone and in sequence in the framework of SWAEI methodology – Mill C

8.5 Comparison of the Results of Three Kraft Mills

Water and steam consumption of three mills in their current situation and after applying SWAEI methodology is benchmarked against reference data (Fig. 8-35). Figure 8-35a shows that by applying SWAEI methodology, it is possible to significantly reduce the water consumption and bring it close to average mills designed in the 1980s. However, mill B is currently well-managed in terms of its water system and consumes even less than average mills designed in the 1980s but the water reutilization system has been improved. This could also explain the lower water saving (24%) of this mill compared to two other cases.

Figure 8-35b illustrates the steam consumption for three mills. Mill A is a dissolving Kraft pulp with a batch digester and is benchmarked against the data for Kraft *paper* pulp with a batch digester due to a lack of data for benchmarking against *dissolving* Kraft pulp with a batch digester. As mentioned, the principal difference between *dissolving* and Kraft *paper* pulp is that there is an extra step before digesting, called pre-hydrolysis, to separate the hemicelluloses. Therefore, it is possible to divide the mill into two parts for benchmarking: the pre-hydrolysis and the Kraft *paper* pulp with the batch digester (Keshtkar et al., 2013). For this mill, steam consumption of less than the 25th percentile of Canadian mills can be accomplished by applying the SWAEI methodology. The steam consumption of mills B and C after applying the methodology is also smaller than the 25th percentile of Canadian ones. These results suggest that this methodology could yield high steam and water savings. It could also make the performance of the mill similar to the most efficient mills in Canada from a steam and water consumption perspectives.

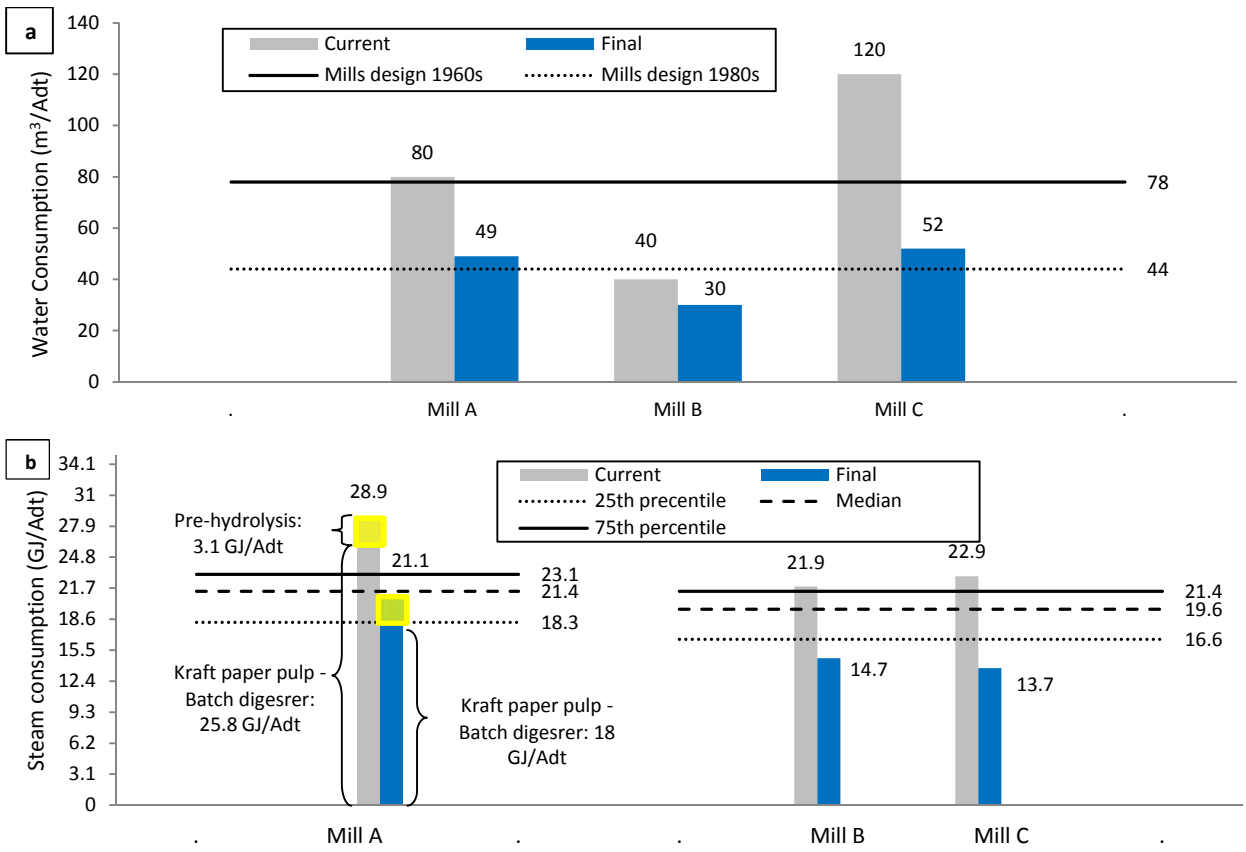

Fig. 8-35 – Benchmarking of (a) water consumption and (b) steam consumption of three mills (mills A, B, and C) before and after applying SWAEI methodology

The economic aspects of the mills A, B, and C with electricity generation and selling electricity to the grid, and also mill B with selling steam to local district are compared in Fig. 8-36. The graph shows that mill B requires high investment because this mill is the biggest one (1765 Adt/d pulp production) and as shown in Fig. 8-35 consumes at current conditions the least water and steam among the three mills. Thus, it is more difficult to identify projects and implement them for its two alternatives. On the other hand, mill C is the smallest Kraft one (280 Adt/d) among the others and consumes a significant amount of water and steam (Fig. 8-35) making it is easier to identify projects for its improvement. It should be noted that the more attention given to existing water management and heat integration, the more effort is required in identifying new saving projects and the larger the capital cost needed. Net profit and payback period highly depend on the source of profit and savings. If they are fossil fuel savings and electricity generation (Fig. 8-36), the net profit is bigger and the payback period is shorter (mill A and C). If they are only electricity generation (Fig. 8-36), the net profit is lower and the payback period is

longer (mill B – electricity generation) because mill B does not use fossil fuel for its boilers and the saved steam is just used to generate electricity. However, if there is a market for exporting large quantities of steam (mill B- selling steam to local district), the net profit will increase and the payback period will be shorter (Fig. 8-36).

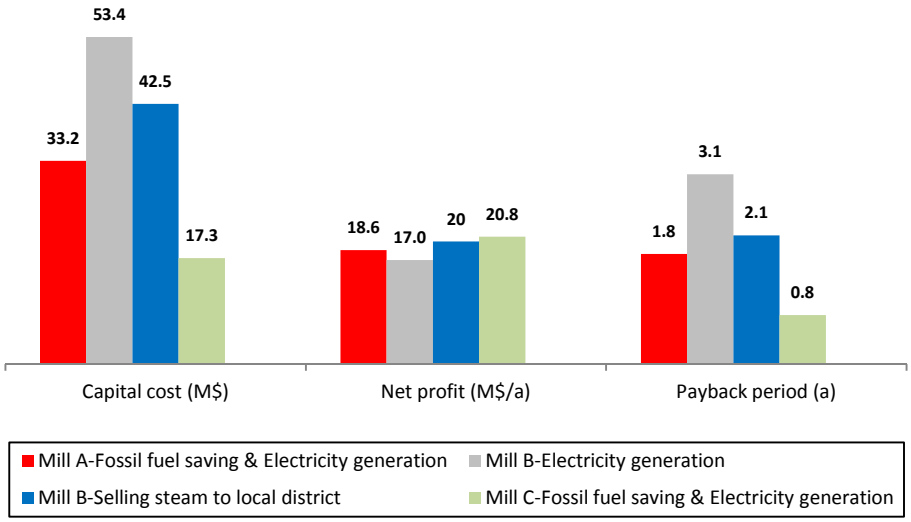

Fig. 8-36 – Comparison of the capital cost, net profit, and payback period after applying SWAEI methodology on three Canadian Kraft mills (mills A, B, and C)

8.6 Sensitivity Analysis over Main Parameters of Selected Alternatives

Sensitivity analysis on profitability criteria has been carried out on two types of factors: the effect of summer condition and also cost factors.

8.6.1 Effects of summer condition

In this study, the winter condition as worst case and harshest condition has been evaluated while the summer condition would slightly change the final results (Fig. 8-37). In this sense, six months are considered as winter and six months as summer. The temperatures are -10 and 25°C for air and 2 and 15°C for fresh air in winter and summer conditions, respectively. The results show that the total excess steam and net profit for all cases are greater than if the winter condition would be taken into account while net profit reduces.

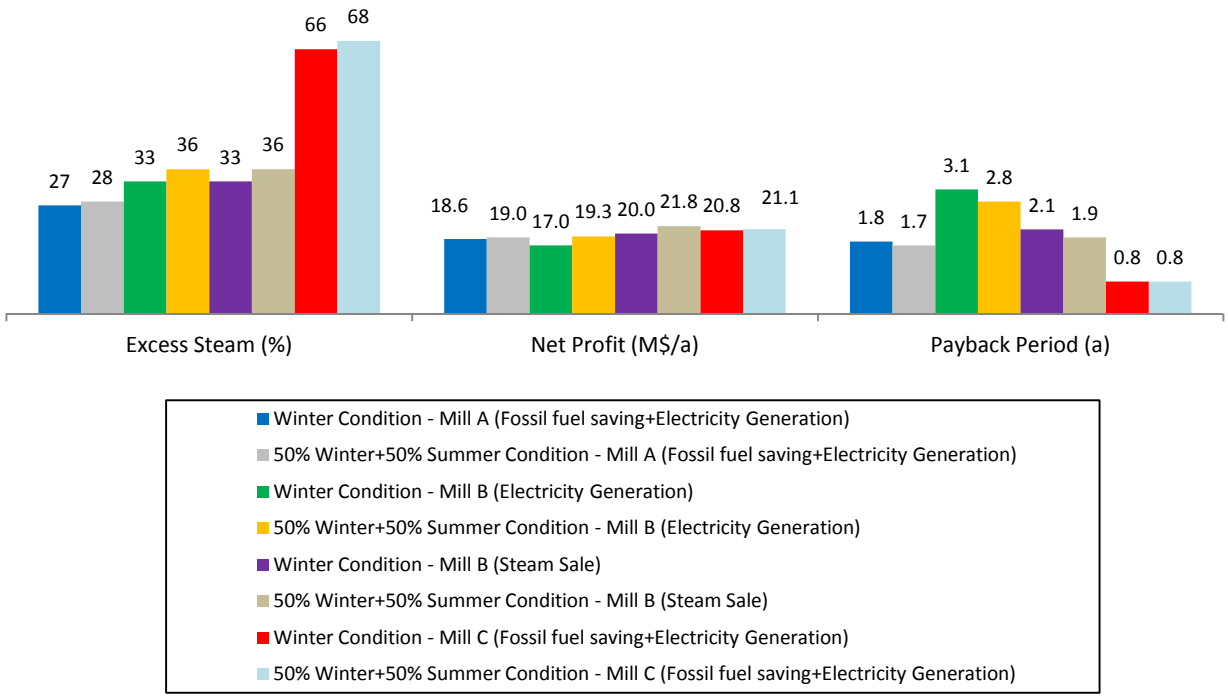

Fig. 8-37 - Effect of summer condition on the final results of selected alternatives

8.6.2 Effects of cost factors

Different scenarios of cost factors have been examined for selected alternatives over whole year condition (6 months summer & 6 months winter). In all cases, the effect of cost factor over payback period has been assessed. The scenarios are defined in Table 8-19. The cost factors are capital cost, bunker oil, electricity, steam, and natural gas prices.

Table 8-19 - Scenarios for sensitivity analysis over cost factors

Cost Factor	Mill	Scenarios				
		Worst	Medium-Worst	Base	Medium- Best	Best
Capital cost-CC (M$)	A, B& C	CC+10%	CC+5%	CC	CC-5%	CC-10%
Bunker oil price-BOP ($/t)	A	450	550	650	750	850
Electricity price-EP ($/MWh)	A, B& C	70	80	90	100	110
Steam price-STP ($/GJ)	B	2.97	3.57	4.17	4.77	5.37
Natural gas price-NGP ($/GJ)	C	2	4	6	7	8
BOP($/t)+EP($/MWh)	A	450, 70	550, 80	650, 90	750, 100	850, 110
CC (M$) +BOP($/t)+EP($/MWh)	A	CC+10%, 450, 70	CC+5%, 550, 80	CC, 650, 90	CC-5%, 750, 100	CC-10%, 850, 110
CC (M$) +EP($/MWh)	B	CC+10%, 70	CC+5%, 80	CC, 90	CC-5%, 100	CC-10%, 110
CC (M$) +STP($/GJ)	B	CC+10%, 2.97	CC+5%, 3.57	CC, 4.17	CC-5%, 4.77	CC-10%, 5.37
NGP($/GJ)+EP($/MWh)	C	2, 70	4, 80	6, 90	7, 100	8, 110
CC (M$) +NGP($/GJ)+EP($/MWh)	C	CC+10%, 2, 70	CC+5%, 4, 80	CC, 6, 90	CC-5%, 7, 100	CC-10%, 8, 110

The results of sensitivity analysis are summarized in Fig. 8-38. The figure shows that the most sensitive parameter for mill A and C is fossil fuel price while the two other parameters (capital

cost and electricity price) have minor impacts on the length of payback period. Combination of different scenarios such as “fossil fuel (BOP or NGP) and electricity (EP) prices” scenario and “capital cost (CC), BOP or NGP, and EP” would increase the effect on payback period. However, even in the worst case, the payback period is still reasonable. For the case of mill A, it is less than three years while with the base case in winter condition, it was 1.5 years. For mill C, it is less than two years while with the base case in winter condition, it was 0.8 years.

For the case of mill B and only electricity generation, the electricity price is more sensitive than capital cost. Similar to mill A, combination of them would increase the effect on payback period. The worst case scenario in this alternative does not seem attractive whereas even the payback period of medium-worst case (3.3a) is close to winter condition (3.1a) and still is justified for investment.

For the mill B and only selling steam to local district, the steam price is more sensitive than capital cost. Combination of them would increase the effect on payback period. However, even the worst case scenario is still attractive for investment compared to winter condition that resulted in 2.1 years of payback period.

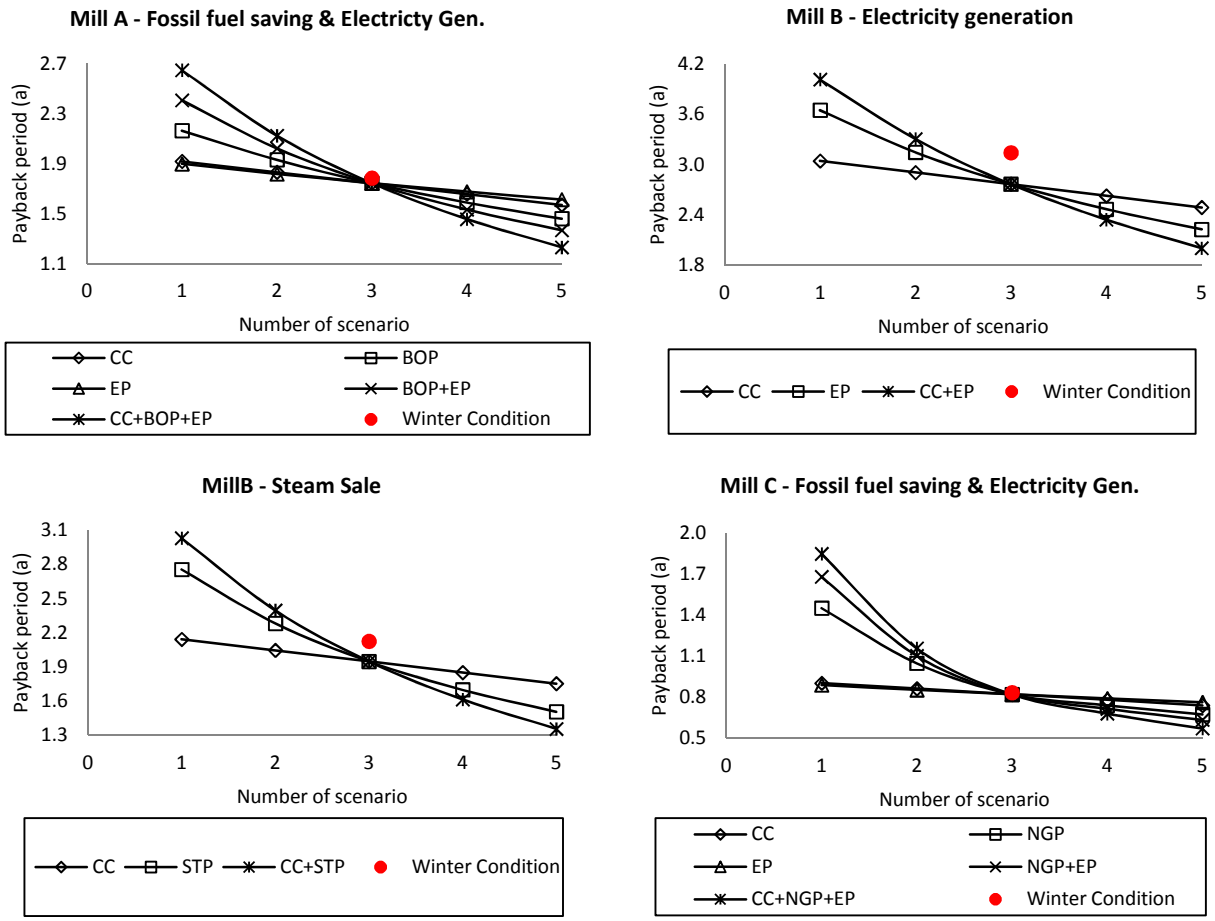

Fig. 8-38 - Effect of capital cost (CC), bunker oil price (BOP), electricity price (EP), steam price (STP), natural gas price (NGP), and combination of them over payback period for selected alternatives for implementation and whole year (6 months summer & 6 months winter) and comparison with only winter condition (red dot)

8.7 Conclusion

The steam and water analysis enhancement and integration (SWAEI) methodology has been developed to improve the energy and water efficiency of a water-based process. This method combines different techniques to achieve the goal. The base case is defined and the simulation of the process is constructed to supply data for analysis and also incorporate the proposed modifications. The pre-benchmarking identifies the areas of inefficiencies in water and steam systems. The scope for saving is easily identified by means of the developed rule of thumb approach.

SWAEI methodology employs three recent techniques to identify projects for improvements. These techniques include simultaneous energy and water networks analysis (SEWNA), equipment performance analysis (EPA), and retrofit HEX network design (R-HEN). Sequential application of these techniques results in significantly more steam saving than if they would have been applied individually. This sequential application leads to complementary projects to maximize steam saving.

The proposition of a heat pump requires in-depth evaluation of the technical and economical factors. This analysis shows that heat pumping is not always a promising solution. Cogeneration always is a good option to improve the energy efficiency of the whole process and generate electricity to sell to the grid after the reduction or elimination of fossil fuel consumption. When the quantity of excess steam is huge, selling the steam to the local district also is a profitable alternative. Either selling electricity or steam generates new revenue for the process.

The strategy for implementation would provide the roadmap to achieve the process with significantly

- less steam and water consumption,
- lower/free fossil fuel consumption,
- less negative environmental impact by lower CO_2 emissions and wastewater generation,
- greener and more sustainable products,
- and, finally, bigger net profit.

The methodology is not specific to a certain water-based process. However, each process has its own specific characteristics and defining the constraints should be carried out individually.

The SWAEI methodology has been validated by applying it on three Kraft mills as a good example of a water-based process with large water and steam consumption. The excess steam and water saving were in the range of 27-66% and 24-58%, respectively. These results are superior to results of other available process integration techniques. The results of sensitivity analysis show that the most important cost factor is the price of fossil fuel and then the other energy price (steam or electricity).

GENERAL DISCUSSION

- ***Benchmarking Technique***

The steam and water systems can be simply diagnosed by two approaches. First, the current steam and water consumptions of the process are benchmarked with the average practice. Second, the comparison of the steam and water allocations for different uses of different plants indicates the inefficiencies in steam and water uses for different areas of a process. In addition, the identification of similarities and differences of HEX and water reutilization networks could be used to propose the steam and water improvement measures by taking advantage of positive characteristics. These analyses determine the preliminary potential for thermal energy and water efficiency improvements. However, an in-depth analysis by means of process integration techniques is required to determine practical projects.

The benchmarking analysis has been carried out for three Canadian Kraft mills. Several potential steam and water savings have been identified.

- ***Simultaneous Energy and Water Networks Analysis (SEWNA)***

SEWNA aims to enhance the efficiency of water utilization and filtrate reutilization systems, water production and related steam networks so as to save steam and water. The existing connections for water reutilization can be improved.

A guideline to extract data for water-energy analysis has been provided. The physical and process constraints, such as hard and soft temperatures, should be considered to determine the water reutilization measures. New established rules and the Water and Energy Pinch Analysis (either graphical or tabular form) help to straightforwardly identify water reutilization projects, correct existing connections, and reduce the effect of non-isothermal mixing at the process line while respecting countercurrent flow, temperature, contaminant concentration, and energy aspects.

The analysis of the water production network has an important impact on improving the effectiveness of SEWNA. The saved water in the process line is reduced at the origin in the water production network. The energy demand to produce warm and hot water decreases. This

results in the elimination of steam consumption for water production and generates water at a higher temperature for the process line. The utilization of warmer and hotter water in the process leads to lower steam consumption.

SEWNA has been applied in three Canadian Kraft mills and resulted in significant steam and water savings with a short payback period.

- ***Equipment Performance Analysis (EPA)***

EPA analyzes and diagnoses the performance of equipment and departments from steam and water consumption perspectives. This technique quickly determines preliminary probable causes using key performance indicators (KPI). It also proposes probable remedial solutions to improve the efficiency of equipment and departments and save steam and water. The results of this technique are starting points for further in-depth and on-site analysis of the poorly performing equipment and departments.

EPA has been applied to a Canadian Kraft mill and the results indicate that the steam generation at the boilers can be substantially increased and also steam and water can be saved at some points.

- ***Retrofit HEX Network Design (R-HEN)***

R-HEN for a water-based process considers physical and process constraints to avoid the position of a non-feasible HEX. It provides a realistic targeting for steam saving based on the constraints and classification of steam users. The effect of non-isothermal mixing is reduced at the early stage of analysis and is included in the extracted data for the HEN design. R-HEN systematically classifies the waste streams to exploit their available heat.

The HEN can be designed with fewer sinks. A systematic algorithm is employed to redesign the existing network using practical rules. These rules provide direct guidelines to select the connection between sinks and sources.

The application of this technique to an existing Kraft mill showed a significant steam savings with a short payback period.

- ***Steam and Water Analysis Enhancement and Integration (SWAEI) Methodology***

SWAEI methodology combines different techniques to analyze a water-based process and determine projects to enhance steam and water efficiency. Sequential application of SEWNA, EPA, and R-HEN results in significantly more steam savings than if the techniques would have been applied individually. It also leads to complementary projects to maximize steam savings.

Installation of an absorption heat pump (AHP) should be examined carefully due to economic factors. In general, fossil fuel reduction, cogeneration, and selling steam to a local district are the most promising ways to use the saved steam.

A strategy offers guidelines to economically prioritize the proposed projects for implementation. The objectives of the implementation strategy are to eliminate or reduce the fossil fuel consumption and then sell steam to a local district or generate electricity.

The method has been applied in three Canadian Kraft mills and resulted in significant steam and water savings.

CONCLUSIONS AND RECOMMENDATIONS

The principle objectives of this thesis were divided into two parts. The first main objective was to develop new process integration (PI) techniques to individually improve the efficiency of water and steam systems of a water-based process. Based on the results, three conceptual PI techniques were developed as follows:

1. Simultaneous energy and water networks analysis (SEWNA)

This technique respects process and physical constraints to identify water reutilization projects. A guideline to extract data for analysis has been provided. Data for analysis include temperature, contaminant concentration, and flowrate of all sinks and sources. A critical parameter is the maximum acceptable contaminant concentration to each sink that is systematically determined. The inevitable effluents are identified and excluded from the pool of sources. New rules have been established for filtrate reutilization and water utilization. A new Water and Energy Pinch analysis has been developed that could be performed either in tabular or graphical ways. It helps to systematically identify water projects with respect to steam savings and a reduction of the effects of non-isothermal mixing. The saved water is reduced from the water production network to eliminate steam consumption for warm and hot water production and produce higher temperature water for the process. Utilization of hotter and warmer water at the process line leads to steam savings by shifting the heat load from steam to water.

2. Equipment performance analysis (EPA)

EPA systematically analyzes and diagnoses the performance of the equipment and departments so as to quickly identify the steam and water saving potentials. The key performance indicators (KPIs) related to energy and water efficiency are used for this reason. The calculated KPIs indicate preliminary probable causes of inefficiencies. EPA also suggests some probable remedial projects to correct inefficiencies. It is a starting point for further in-depth and on-site analysis of the poor performance equipment to improve their efficiency.

3. Retrofit HEX network design (R-HEN)

R-HEN improves the heat integration of the existing HEX network. Similar to SEWNA, the process and physical constraints are respected to avoid non-feasible projects. A new targeting approach with the least number of data has been developed by classifying steam users to provide a realistic estimation for final steam savings. Reducing the effects of non-isothermal mixing is also included in data extraction. New rules to connect the hot and cold streams more straightforwardly have been established based on the characteristics of the process. A systematic algorithm has been developed to perform retrofit HEN design using the estimation and correction approach.

The second objective was to develop a methodology to enhance energy and water efficiency of a water-based process by combining the process integration techniques. As a result, a steam and water analysis enhancement and integration (SWAEI) methodology has been developed. It consists of six successive steps: base case development, pre-benchmarking, identification of energy and water projects, heat upgrading and conversion, implementation strategy, and post-benchmarking.

A benchmarking technique has been developed to diagnose water and steam inefficiencies. First of all, different parts of the process are benchmarked against the current practice from the standpoint of steam and water consumption. Then, different processes are compared from the standpoint of steam and water allocation for different usages to indicate inefficiencies. The HEX and water reutilization networks of different processes are also compared to identify similarities, differences, and positive and negative characteristics. The advantageous characteristics can be used to propose steam and water saving measures for another process. New rules of thumb approaches have been developed to simply calculate the scope of steam and water savings with the least number of data.

The identification of energy and water projects is the core of SWAEI. Three developed PI techniques (SEWNA, EPA, and R-HEN) from the first main objective are applied sequentially. This sequential application leads to significantly more steam savings than if the techniques would have been applied individually.

The proposition of cogeneration and trigeneration has been carefully examined. The absorption heat pump is not always a promising solution, if the three developed techniques have already been sequentially applied. Selling electricity to the grid is always a good option while selling steam to the local district is profitable when the quantity of steam is huge. This sequential application of SWENA, EPA, R-HEN, and cogeneration leads to complementary projects to maximize steam savings and net profit. The results are superior to the results of other available process integration techniques.

The application of SWAEI in three Canadian Kraft mills showed less steam, water, and fossil fuel consumption. It also has a less negative environmental impact, and leads to green and sustainable products with a greater net profit. It prepares the mills to be energy optimized receptors for sustainable biorefinery integration to provide enough steam for the biorefinery side.

The SWAEI methodology is not specific to a certain water-based process. However, each process has its own specific characteristics that should be taken into account.

- ***Original Contribution***

The following contributions are claimed:

- Development of a benchmarking technique as a means to identify preliminary water and steam savings.
    - By comparing the steam and water consumption of the cases with reference values.
    - By comparing the allocation of water and steam consumption to different usages.
    - By comparing the HEX and water reutilization networks.
- Development of simultaneous energy and water networks analysis (SEWNA) technique to identify water projects with respect to steam reduction.
    - Providing new guidelines for data extraction.
    - Consideration of process and physical constraints.
    - Consideration of non-isothermal mixing (NIM) effects.
    - Establishment of new rules for water reutilization.

  - Development of new Water and Energy Pinch analysis in tabular or graphical form.
  - Providing approach to analyze existing water production networks to produce hotter and warmer water.
- Development of equipment performance analysis (EPA) technique to diagnose inefficiencies in equipment and departments of the process.
  - Identification of key performance indicators related to steam and water efficiency.
  - Identification of probable causes of inefficiencies and probable remedial projects.
  - Channeling the efforts towards on-site and in-depth performance analysis.
- Development of retrofit HEX network design (R-HEN) technique to improve heat integration in an existing water-based process.
  - Providing a targeting approach with the least number of data.
  - Including the reduction of NIM effects in the data extraction step.
  - Establishment of new rules for HEX network design.
  - Development of a new algorithm to redesign the existing HEX network.
- Development of steam and water analysis enhancement and integration (SWAEI) methodology that combines different process integration techniques to improve water and thermal energy efficiency.
  - Identification of water and steam projects by the sequential application of SEWNA, EPA, and R-HEN
  - Assessment of the possibility for cogeneration, trigeneration, selling electricity to the grid, and steam to the local district.

- ***Recommendations for Future Research***

There are many possible directions for future research.

- ***Benchmarking technique***

The total number of case studies could be increased to have a more precise pattern for water and steam allocation to different usages also the better understanding of similarities and differences in HEX and water reutilization networks.

- ***EPA***

On-site analysis of the performance of equipment could be conducted to determine the exact causes of inefficiencies and be able to propose accurate remedial projects.

- ***SEWNA and R-HEN***

The mathematical algorithms of these two techniques can be developed. They also can be automated.

- ***SWENA, R-HEN, and SWAEI***

For further validation, the techniques (SEWNA and R-HEN) and methodology (SWAEI) can be applied on other water-based processes considering their constraints and characteristics.

- ***Application in P&P mills***

This method could be applied on the summer condition of the three mills.

- ***Biorefining***

SWAEI methodology can be used for transforming existing Kraft mills to a green integrated forest biorefinery. In addition, the SWAEI can be applied on the biorefinery side to reduce its steam demand.

REFERENCES

AbitibiBOWATER, C' Recovery boiler overview. abitibibowater.ca.

Afshar, P., Brown, M., Austin, P., Wang, H., Breikin, T., Maciejowski, J., 2012. Sequential modelling of thermal energy: New potential for energy optimisation in papermaking. Applied Energy 89, 97-105.

Ala-Kaila, K., Poukka, O., 2003. Possibilities of fractional filtrate configurations:: Case: Bleaching of wood pulp fibres. Chemical Engineering Journal 95, 187-197.

Algehed, J., 2002. Energy efficient evaporation in future kraft pulp mills, Department of Heat and Power Technolog. Chalmers University of Technology, Göteborg, Sweden.

Alva-Argaez, A., Savulescu, L., 2009. Water Reuse Project Selection A retrofit path to Water and energy savings. Chemical Engineering Transactions 18, 403-408.

Alva-Argaez, A., Savulescu, L., Cripps, 2008. Water-based energy assessment. A conceptual approach to retrofit systems with strong energy-water interactions., PRES'08, 11th Conference on Process Integration, Modelling and Optimisation for Energy Saving and Pollution Reduction, Prague.

Alva-Argaez, A., Savulescu, L., Poulin, B., 2007. A process integration-based decision support system for the identification of water and energy efficiency improvements in the pulp and paper industry. Pulp and Paper Technical Association of Canada p. 23.

AmericanProcess, 2010. Pinch technology: How is Pinch technology different from other energy audits? American Process, Atlanta, USA.

Axelsson, E., Berntsson, T., 2005. Pinch analysis of a model mill: Economic and environmental gains from thermal process-integration in a state-of-the-art magazine paper mill. Nordic Pulp and Paper Research Journal 20, 308-315.

Axelsson, E., Olsson, M.R., Berntsson, T., 2006. Heat integration opportunities in average Scandinavian kraft pulp mills: Pinch analyses of model mills. Nordic Pulp and Paper Research Journal 21, 466-475.

Axelsson, E., Olsson, M.R., Berntsson, T., 2008. Opportunities for process-integrated evaporation in a hardwood pulp mill and comparison with a softwood model mill study. Applied Thermal Engineering 28, 2100-2107.

Bagajewicz, M., 2000. A review of recent design procedures for water networks in refineries and process plants. Computers & Chemical Engineering 24, 2093-2113.

Bagajewicz, M., Rodera, H., Savelski, M., 2002. Energy efficient water utilization systems in process plants. Computers & Chemical Engineering 26, 59-79.

Bakhtiari, B., Fradette, L., Legros, R., Paris, J., 2010a. Opportunities for the integration of absorption heat pumps in the pulp and paper process. Energy 35, 4600-4606.

Bakhtiari, B., Fradette, L., Legros, R., Paris, J., 2010b. Retrofit of absorption heat pumps into manufacturing processes: Implementation guidelines. The Canadian Journal of Chemical Engineering 88, 839-848.

Beagle, M., 1962. Recompression evaporation. Chemical Engineering Progress 58, 79-82.

Bengtsson, C., 2004. Novel process integration opportunities in existing kraft pulp mills with low water consumtion, Department of Heat and Power Technolog. Chalmers University of Technology, Götenborg, Sweeden.

Berglin, N., Berntsson, T., 1998. Pulp mill heat integration of black liquor gasifiers, Proceeding of International Chemical Recovery Conference, Tampa, FL., pp. 693-704.

Bhattacharyya, S.C., Thuy Hien, N., 2005. Cogeneration potential in pulp and paper industry of Vietnam. International journal of energy research 29, 345-358.

Bhutani, N., Lindberg, C.F., Starr, K., Horton, R., 2012. Energy assessment of Paper Machines. Energy Procedia 14, 955-963.

Bogataj, M., Bagajewicz, M.J., 2008. Synthesis of non-isothermal heat integrated water networks in chemical processes. Computers & Chemical Engineering 32, 3130-3142.

Bogdanski, B., 2011. Midterm Outlook for Canadian Pulp and Paper Sector: 2011-2020. Natural resource of Canada.

Boix, M., Pibouleau, L., Montastruc, L., Azzaro-Pantel, C., Domenech, S., 2012. Minimizing water and energy consumptions in water and heat exchange networks. Applied Thermal Engineering 36, 442-455.

Brännvall, E., 2009. 1. Overview of Pulp and Paper Processes, Pulping Chemistry and Technology Walter de Gruyter, pp. 1-12.

Brogdon, B., Bell, M., 2004. Optimization of Chlorine Dioxide Bleaching Sequence For Kraft Pulps Through Improved Oxidative Alkaline Extraction Stage Performance, Tappi Fall Technical Conference, Atlanta, Georgia.

Brown, D., Maréchal, F., Paris, J., 2005. A dual representation for targeting process retrofit, application to a pulp and paper process. Applied Thermal Engineering 25, 1067-1082.

Browne, T., Singbeil, D., Gilsenan, R., Paleologou, M., 2011. Bio-energy and Bio-chemicals Synthesis Report. FPInnovations, Montreal, Canada.

Browne, T.C., 1999. Réduction des coûts énergétiques dans l'indurstrie des pâtes et papiers. PAPRICAN, Montreal, Canada.

Bryant, P.S., Malcolm, E.W., Woitkovich, C.P., 1996. Pulp and paper mill water use in North America, TAPPI Environmental Conference Exhibit, Orlando, Florida, USA.

Bryntesson, J., Dahllöf, H., Pettersson, E., Ragnar, M., 2002. New Compact Technology for Washing of Chemical Pulp, African Pulp and Paper Week, Durban, South Africa.

Cakembergh-Mas, A., Paris, J., Trépanier, M., 2010. Strategic simulation of the energy management in a Kraft mill. Energy Conversion and Management 51, 988-997.

Carlsson, A., Franck, P.A., Berntsson, T., 1993. Design better heat exchanger network retrofits. Chemical Engineering Progress 89, 87-96.

Castro, J., Doyle, F., 2004. A pulp mill benchmark problem for control: Problem description. Journal of Process Control 14, 17-29.

CETC, 2003. Pinch Analysis: For efficient use of Energy, Water & Hydrogen Natural Resources Canada, Montreal, Canada.

Chandra, S., 1997. Effluent minimization: A little water goes a long way. Tappi Journal 80, 37-42.

Chen, H.-W., Hsu, C.-H., Hong, G.-B., 2012. The case study of energy flow analysis and strategy in pulp and paper industry. Energy Policy 43, 448-455.

Chew, I.M.L., Foo, D.C.Y., Bonhivers, J.-C., Stuart, P., Alva-Argaez, A., Savulescu, L.E., 2013. A model-based approach for simultaneous water and energy reduction in a pulp and paper mill. Applied Thermal Engineering 51, 393-400.

Chiogioji, M., 2008. Industrial Energy Conservation. Marcel Dekker Inc., New York, United State.

CIPEC, 2008. Benchmarking energy use in Canadian P&P mills. NRCan, Montreal, Canada.

Cortés, E., Rivera, W., 2010. Exergetic and exergoeconomic optimization of a cogeneration pulp and paper mill plant including the use of a heat transformer. Energy 35, 1289-1299.

Cortés, M.G., Verelst, H., Pedraja, R.E., González, E., 2011. Simultaneous energy and water minimization applied to sugar process production. Chem Eng Trans 25, 177-182.

Costa, A., Bakhtiari, B., Schuster, S., Paris, J., 2009. Integration of absorption heat pumps in a Kraft pulp process for enhanced energy efficiency. Energy 34, 254-260.

Costa, A., Neuhann, V., Vaillancourt, N.J., Paris, J., 2004. Applications of Absorption Heat Pumps in the Pulp and Paper Industry for Increased Efficiency and Reduction of Greenhouse Gas Emissions, 90th Annual Meeting Preprints B, pp. 191-195.

Crotogino, R., Poirier, N., Trink, D., 1987. The principles of pulp washing. Tappi Journal 70, 95-103.

DellChallenge, 2013. Steam Turbines. The University of Texas at Austin.

Dhole, V.R., 1998. Fluid efficiency, US Patent. Linnhoff March Limited (Northwich, GB2), United States.

Dhole, V.R., Linnhoff, B., 1993. Total site targets for fuel, co-generation, emissions, and cooling. Computers & Chemical Engineering 17, S101-S109.

Dhole, V.R., Ramchandani, N., Tainsh, R.A., Wasilewski, M., 1996. Make your process water pay for itself. Chemical Engineering 103, 100-103.

Dimian, A., 2003. Integrated design and simulation of chemical processes. Elsevier Science Ltd.

Dong, H.-G., Lin, C.-Y., Chang, C.-T., 2008. Simultaneous optimization approach for integrated water-allocation and heat-exchange networks. Chemical Engineering Science 63, 3664-3678.

Ek, M., Gellerstedt, G., Henriksson, G., 2009. Pulp and Paper Chemistry and Technology: Pulping Chemistry and Technology. Walter de Gruyter, Berlin, Germany.

El-Halwagi, M., Gabriel, F., Harell, D., 2003. Rigorous graphical targeting for resource conservation via material recycle/reuse networks. Industrial & engineering chemistry research 42, 4319-4328.

El-Halwagi, M.M., 1997. Pollution prevention through process integration Systematic design tools (1st ed.). Academic Press, San Diego, California, USA.

El-Halwagi, M.M., Spriggs, H.D., 1998. Solve design puzzles with mass integration. Chemical Engineering Progress 94, 25-44.

El Halwagi, M.M., Manousiouthakis, V., 1989. Synthesis of mass exchange networks. AIChE Journal 35, 1233-1244.

EngineeringPage, 2013. Typical overall heat transfer coefficients (U-values). Engineering Page.

EPA, 2010. Available and emerging technologies for reducing greenhouse gas emissions from the pulp and paper manufacturing industry, North Carolina.

Feng, X., Li, Y., Shen, R., 2009. A new approach to design energy efficient water allocation networks. Applied Thermal Engineering 29, 2302-2307.

Feng, X., LI, Y., YU, X., 2008. Improving energy performance of water allocation networks through appropriate stream merging. Chinese Journal of Chemical Engineering 16, 480-484.

Fraas, A.P., 1989. Heat exchanger design. John Wiley & Sons.

Francis, B., Towers, M., Browne, T., 2006. Benchmarking energy use in pulp and paper operations., 92nd PAPTAC Annual Meeting, Montréal,Qc., Canada, pp. A55-A61.

Frederick, J., Porter, J., Tran, H., 2011. Mitigating the risk of smelt-water explosions in dissolving tanks, TAPPI Conference, Covington, KY, US, pp. 1241-1249.

Garza Villarreal, H., 2011. Assessment and Enhancement of the Performance of the Pulp Washing Operation in Kraft Mills. École Polytechnique de Montréal.

Georgia Tech, I.o.P.S.a.T., 2013. Typical ECF bleaching sequences conditions of softwood kraft pulp. Institute of Paper Scince and Technology.

Hallale, N., 2002. A new graphical targeting method for water minimisation. Advances in Environmental Research 6, 377-390.

Han, I.S., Lee, Y.H., Han, C., 2006. Modeling and optimization of the condensing steam turbine network of a chemical plant. Ind. Eng. Chem. Res 45, 670-680.

Hernández-Santoyo, J., Sánchez-Cifuentes, A., 2003. Trigeneration: an alternative for energy savings. Applied Energy 76, 219-227.

Higa, M., Freitas, A., Bannwart, A., Zemp, R., 2009. Thermal integration of multiple effect evaporator in sugar plant. Applied Thermal Engineering 29, 515-522.

Hill, K., Chaloux, J., 2012. Paper Drying Energy Tips. Paper Advance, The source for Canadian pulp, paper and forestry innovation news

Isaksson, J., Åsblad, A., Berntsson, T., 2012. Comparison Between a Detailed Pinch Analysis and the 'Heat Load Model for Pulp and Paper'–Case Study for a Swedish Thermo-Mechanical Pulp and Paper Mill. Chemical Engineering 29, 43-48.

Jacob, J., Kaipe, H., Couderc, F., Paris, J., 2002. Water network analysis in pulp and paper processes by pinch and linear programming techniques. Chemical Engineering Communications 189, 184-206.

Jansson, J., 2009. Digester modelling for diagnostics and control. School of Sustainable Development of Society and Technology, Mälardalen University Akademin för hållbar utveckling, Mälardalens högskola.

Johnston, P.A., Stringer, R.L., Santillo, D., Stephenson, A.D., Labounskaia, I.P., McCartney, H.M., 1996. Towards zero-effluent pulp and paper production: the pivotal role of totally chlorine free bleaching. Amsterdam: Greenpeace International.

Jönsson, J., Ruohonen, P., Michel, G., Berntsson, T., 2010. Increased thermal efficiency in Scandinavian integrated TMP and paper mills–analysing the potential for steam savings using the heat load model for pulp and paper. Chemical Engineering 21, 535-540.

Jönsson, J., Svensson, I.-L., Berntsson, T., Moshfegh, B., 2008. Excess heat from kraft pulp mills: Trade-offs between internal and external use in the case of Sweden—Part 2: Results for future energy market scenarios. Energy Policy 36, 4186-4197.

Kapil, A., Bulatov, I., Smith, R., Kim, J.-K., 2012. Process integration of low grade heat in process industry with district heating networks. Energy 44, 11-19.

Kemp, I.C., 2005. Reducing Dryer Energy Use by Process Integration and Pinch Analysis. Drying Technology: An International Journal 23, 2089 - 2104.

Kemp, I.C., 2007. Pinch Analysis and Process Integration: A User Guide on Process Integration for the Efficiente Use of Energy (2nd ed.). Elsevier, Oxford, UK.

Keshtkar, M.J., Garza Villarreal, H., Ammara, R., Moshkelani, M., Perrier, M., Paris, J., 2012. Equipment performance analysis to enhance energy and water efficiency of Kraft mills, Pulp and Paper Technical Association of Canada, Montreal.

Keshtkar, M.J., Perrier, M., Paris, J., 2013. Benchmarking as a Means to Identify Potential Water and Steam Savings – Application to Kraft Mills. ready to be submitted.

Kim, J.-K., Smith, R., 2004. Automated design of discontinuous water systems. Process Safety and Environmental Protection 82, 238-248.

Kong, L., Liu, H., Li, J., Tao, J., 2011. Waste heat integration of coating paper machine drying process. Drying Technology 29, 442-450.

Koufos, D., Retsina, T., 2001. Practical energy and water management through pinch analysis for the pulp and paper industry. Water science and technology: a journal of the International Association on Water Pollution Research 43, 327-332.

Kumana, J.D., 2002. Pinch Analysis for Process Energy Optimization. Energy Engineering 99, 18-41.

Leewongtanawit, B., Kim, J.-K., 2009. Improving energy recovery for water minimisation. Energy 34, 880-893.

Leewongtanawit, B., Kim, J.K., 2008. Synthesis and optimisation of heat-integrated multiple-contaminant water systems. Chemical Engineering and Processing: Process Intensification 47, 670-694.

Linnhoff, B., Twoneend, D.W., D. Boland, G.F.H., Thomas, B.E.A., Guy, A.R., Marsland, R.H., 1994. A user guide on process integration for the efficient use of energy (2nd ed.). Institution of Chemical Engineers, Rugby, UK.

Linnhoff, B., Witherell, W.D., 1986. Pinch technology guides retrofit. Oil Gas J.;(US) 84.

Luthi, O., 1983. Equivalent displacement ratio–evaluating washer efficiency by comparison. Tappi J 66, 82-84.

Lutz, E., 2008. Identification and analysis of energy saving projects in a Kraft mill. Pulp and Paper Canada 109, 13–17.

Mabee, W., Gregg, D., Saddler, J., 2005. Assessing the emerging biorefinery sector in Canada, Twenty-Sixth Symposium on Biotechnology for Fuels and Chemicals. Springer, pp. 765-778.

Manan, Z.A., Tan, Y.L., Foo, D.C.Y., 2004. Targeting the minimum water flow rate using water cascade analysis technique. AIChE Journal 50, 3169-3183.

Manan, Z.A., Tea, S.Y., Alwi, S.R.W., 2009. A new technique for simultaneous water and energy minimisation in process plant. Chemical Engineering Research and Design 87, 1509-1519.

Maréchal, F., Kalitventzeff, B., 1996. Targeting the minimum cost of energy requirements: a new graphical technique for evaluating the integration of utility systems. Computers & Chemical Engineering 20, S225-S230.

Maréchal, F., Kalitventzeff, B., 1997. Identification of the optimal pressure levels in steam networks using integrated combined heat and power method. Chemical Engineering Science 52, 2977-2989.

Maréchal, F., Kalitventzeff, B., 1998a. Energy integration of industrial sites: tools, methodology and application. Applied Thermal Engineering 18, 921-933.

Maréchal, F., Kalitventzeff, B., 1998b. Process integration: Selection of the optimal utility system. Computers & Chemical Engineering 22, S149-S156.

Marinova, M., Beaudry, C., Taoussi, A., Trépanier, M., Paris, J., 2008. Economic assessment of rural district heating by bio-steam supplied by a paper mill in Canada. Bulletin of Science, Technology & Society 28, 159-173.

Marinova, M., Mateos-Espejel, E., Bakhtiari, B., Paris, J., 2007. A new methodology for the implementation of Trigeneration in industry: Application to the Kraft process, First European Conference on Polygeneration: Technologies and Application, Tarragona, Spain, pp. 333 -351.

Marshman, D.J., Chmelyk, T., Sidhu, M.S., Gopaluni, R.B., Dumont, G.A., 2010. Energy optimization in a pulp and paper mill cogeneration facility. Applied Energy 87, 3514-3525.

Martin, N., Anglani, N., Einstein, D., Khrushch, M., Worrell, E., Price, L., 2000. Opportunities to improve energy efficiency and reduce greenhouse gas emissions in the US pulp and paper industry. Ernest Orlando Lawrence Berkeley National Laboratory, US Department of Energy.

Mateos-Espejel, E., 2009. Development of a strategy for energy efficiency improvement in a Karft process based on system interactions analysis, Department of Chemical Engineering. Ecole Polytechnique de Montreal, Montreal, Qc, Canada.

Mateos-Espejel, E., Marinova, M., Bararpour, S., Paris, J., 2010a. Energy Implications of Water Reduction Strategies in Kraft Process. Part I: Methodology. Pulp & Paper Canada May/June 34-37.

Mateos-Espejel, E., Marinova, M., Bararpour, S., Paris, J., 2010b. Energy Implications of Water Reduction Strategies in Kraft Process. Part II: Results. Pulp & Paper Canada May/June 38-41.

Mateos-Espejel, E., Marinova, M., Maréchal, F., Paris, J., 2007. Analyse énergétique d'évaporateurs para la méthode de la double représentation. VIIIéme CIFQ sur la Thermique des Systèmes, Montréal, Canada, 257–262.

Mateos-Espejel, E., Marinova, M., Schneider, J., Paris, J., 2010c. Simulation of a Kraft Pulp Mill for the Integration of Biorefinery Technologies and Energy Analysis. Pulp & Paper Canada May/June 2010, 19-23.

Mateos-Espejel, E., Moshkelani, M., Keshtkar, M.J., Paris, J., 2011a. Sustainability of the green integrated forest biorefinery: a question of energy. J-FOR-Journal of Science and Technology for Forest Products and Processes 1, 55-61.

Mateos-Espejel, E., Mostajeran-Goortani, B., Paris, J., 2009. Intégration de la cogéneration d'énergie dans une usine de pâte et papier, IX éme Colloque Interuniversitaire Franco-Québecois sur la Thermique des Systèmes, Lille, France, pp. 227-232.

Mateos-Espejel, E., Savulescu, L., Maréchal, F., Paris, J., 2010d. Systems interactions analysis for the energy efficiency improvement of a Kraft process. Energy 35, 5132-5142.

Mateos-Espejel, E., Savulescu, L., Maréchal, F., Paris, J., 2011b. Base Case Process Development for Energy Efficiency Improvement; Application to a Kraft Pulping Mill. Part II: Benchmarking analysis. Chemical Engineering Research and Design 89, 729-741

Mateos-Espejel, E., Savulescu, L., Maréchal, F., Paris, J., 2011c. Unified methodology for thermal energy efficiency improvement: Application to Kraft process. Chemical Engineering Science 66, 135-151.

Mateos-Espejel, E., Savulescu, L., Paris, J., 2011d. Base case process development for energy efficiency improvement, application to a Kraft pulping mill. Part I: Definition and characterization. Chemical Engineering Research and Design 89, 742-752.

Metso, 2011. Substantial savings through efficient waste heat utilization at SCA Packaging Obbola. www.metso.com.

Meunier, F., 2002. Co-and tri-generation contribution to climate change control. Applied Thermal Engineering 22, 703-718.

Miliander, L., 2009. Pulp washing. Pulp and Paper Chemistry and Technology 2, 484.

Moran, M.J., Shapiro, H.N., 2006. Fundamentals of Engineering Thermodynamics, 5th ed. John Wiley & Sons, Inc., England.

Mostajeran Goortani, B., Mateos-Espejel, E., Moshkelani, M., Paris, J., 2011. Energy efficiency improvement of a Kraft process through practical stack gases heat recovery. Applied Thermal Engineering 31, 4091-4096.

Mostajeran Goortani, B., Mateos-Espejel, E., Paris, J., 2010. Integration of a cogeneration unit into a kraft pulping process. Applied Thermal Engineering 30, 2724-2729.

Navarri, P., Bédard, S., 2008. Part II: Assessing water and energy consumption and designing strategies for their reduction (4: Auditing energy and water use in the food industry), in: Klemeš, J., Smith, R., Kim, J.K. (Eds.), Handbook of water and energy management in food processing. Woodhead Publishing Limited, Cambridge, UK.

NCDENR, 2004. Boiler Blowdown. infohouse.p2ric.org.

Noel, G., Boisvert, G., 1998. Project design in energy efficiency using Pinch analysis. Pulp & paper Canada 99, 103-105.

Nordman, R., Berntsson, T., 2006. Design of kraft pulp mill hot and warm water systems--A new method that maximizes excess heat. Applied Thermal Engineering 26, 363-373.

Nordman, R., Berntsson, T., 2009a. Use of advanced composite curves for assessing cost-effective HEN retrofit I: theory and concepts. Applied Thermal Engineering 29, 275-281.

Nordman, R., Berntsson, T., 2009b. Use of advanced composite curves for assessing cost-effective HEN retrofit II. Case studies. Applied Thermal Engineering 29, 282-289.

Orzechowska, A., 2006. Achieving efficient pulp washing. Pulp & Paper Canada, (February), 107.

Paris, J., 2000. A system approach to system closure in integrated newsprint mills. Pulp & Paper Canada 101, 34-42.

Périn-Levasseur, Z., Palese, V., Maréchal, F., 2008. Energy integration study of a multi-effect evaporator, Proceedings of the 11th Conference on Process Integration, Modelling and Optimisation for Energy Saving and Pollution Reduction, Praha, Czech Republic.

Persson, J., Berntsson, T., 2009. Influence of seasonal variations on energy-saving opportunities in a pulp mill. Energy 34, 1705-1714.

Peters, M., Timmerhaus, K., West, R., 2002. Plant Design and Economics for Chemical Engineers (5 edition). McGraw-Hill Science/Engineering/Math, New York, USA.

Pettersson, F., Söderman, J., 2007. Design of robust heat recovery systems in paper machines. Chemical Engineering and Processing: Process Intensification 46, 910-917.

Pharande, V., Asthana, S., Saini, D., Kaul, S., 2011. Energy optimization in integrated pulp and paper mills with recourse to environmental benefits. Journal of Scientific & Industrial Research 70, 1061-1069.

RISI, 2010. Excerpt - World Pulp & Recovered Paper Forecast.

Rouzinou, S., Retsina, T., Cooper, A., 2003. Pinch analysis: A powerful tool for the integration of new process equipment into existing pulp and paper mills, TAPPI Fall Technical Conference: Engineering, Pulping and PCE and I, Chicago, IL, US, pp. 26-30.

Ruohonen, P., Ahtila, P., 2010. Analysis of a mechanical pulp and paper mill using advanced composite curves. Applied Thermal Engineering 30, 649-657.

Ruohonen, P., Hakala, J., Ahtila, P., 2009. Testing of heat load model for pulp and paper in two TMP cases, 12th International Conference on Process Integration, Modelling and Optimisation for Energy Saving and Pollution Reduction, Rome, Italy, pp. 433 - 438.

Ruohonen, P., Hakala, J., Ahtila, P., 2010. Analysis of an operating TMP mill using advanced composite curves and Heat Load Model for Pulp and Paper, 7th European Congress of Chemical Engineering ECCE-7, Prague, Czech Republic.

Sanchez, D.R., 2007. Recausticizing-Principles and practice, TAPPI Conference, Jacksonville, FL pp. 21-82.

Sarimveis, H.K., Angelou, A.S., Retsina, T.R., Rutherford, S.R., Bafas, G.V., 2003. Optimal energy management in pulp and paper mills. Energy Conversion and Management 44, 1707-1718.

Savulescu, L., Kim, J.K., 2008. 10: Novel methods for combined energy and water minimisation in the food industry, in: Klemeš, J., Smith, R., Kim, J.K. (Eds.), Handbook of water and energy management in food processing. Woodhead Publishing Limited, Cambridge, UK.

Savulescu, L., Kim, J.K., Smith, R., 2005a. Studies on simultaneous energy and water minimisation--Part I: Systems with no water re-use. Chemical Engineering Science 60, 3279-3290.

Savulescu, L., Kim, J.K., Smith, R., 2005b. Studies on simultaneous energy and water minimisation--Part II: Systems with maximum re-use of water. Chemical Engineering Science 60, 3291-3308.

Savulescu, L., Périn-Levasseur, Z., Benali, M., 2012. Mapping of Thermal Energy Integration Retrofit Assessment of Industrial Plants. Chemical Engineering 29, 31-36.

Savulescu, L., Poulin, B., Hammache, A., Bédard, S., Gennaoui, S., 2005c. Water and energy savings at a kraft paperboard mill using process integration. Pulp and Paper Canada 106, 29-31.

Savulescu, L., Sorin, M., Smith, R., 2002. Direct and indirect heat transfer in water network systems. Applied Thermal Engineering 22, 981-988.

Savulescu, L.E., Alva-Argaez, A., 2008. Direct heat transfer considerations for improving energy efficiency in pulp and paper Kraft mills. Energy 33, 1562-1571.

Seider, W.D., Seader, J.D., Lewin, D.R., Widagdo, S., 2009. Product and Process Design Principles, 3rd ed. John Wiley & Sons, Inc., USA.

Shafiei, S., Davin, A., Stuart, P.R., Paris, J., 2003. From thermal pinch analysis to mass exchange networks, Chemical Technology of Wood pulp paper, pp. 121-126.

Shukla, S.K., Kumar, V., Yeom, I., Bansal, M.C., 2012. Recycling of bleach plant effluent of an Indian paper mill using water cascade analysis technique. Clean Technologies and Environmental Policy 14, 677-685.

Sivill, L., Ahtila, P., 2009. Energy efficiency improvement of dryer section heat recovery systems in paper machines–A case study. Applied Thermal Engineering 29, 3663-3668.

Sivill, L., Ahtila, P., Taimisto, M., 2005. Thermodynamic simulation of dryer section heat recovery in paper machines. Applied Thermal Engineering 25, 1273-1292.

Smith, J., Reddy, M., 2013. Energy Conservation Using Natural Gas High Efficiency Boilers, in: Engineering, D.U.-M. (Ed.), Halifax, NS, p. 11.

Smook, G.A., 2002. Handbook for pulp & paper technologists (3rd Edition ed.). Angus Wild Publication Inc., Vancouver, Canada.

Söderman, J., Pettersson, F., 2003. Influence of variations in cost factors in structural optimisation of heat recovery systems with moist air streams. Applied Thermal Engineering 23, 1807-1818.

Sorin, M., Bédard, S., 1999. The global pinch point in water reuse networks. Process Safety and Environmental Protection 77, 305-308.

Stromberg, C., 1991. Washing for low bleach chemical consumption. Tappi Journal 74, 113-122.

Tahouni, N., Jabbari, B., Panjeshahi, M.H., 2012. Optimal Design of a Cogeneration System in a Kraft Process using Genetic Algorithm. CHEMICAL ENGINEERING 29.

Thorp, B., 2005. Biorefinery offers industry leaders business model for major change. Pulp & Paper 79, 35-39.

ToolBox, T.E., 2013. Heat transfer coefficients in heat exchangers. The Engineering ToolBox.

Tripathi, P., 1996. Pinch technology reduces wastewater. Chemical Engineering 103, 87-90.

Turner, P.A., Browne, T.C., Williamson, P.N., 2001. Water use reduction in the pulp and paper industry, 2nd edition ed. Canadian Pulp and Paper Association, Montreal, Canada.

US.DOE, 2012. Consider Installing High-Pressure Boilers with Backpressure Turbine-Generators, in: DOE/GO-102012-3394 (Ed.), Steam Tip Sheet #22. U.S. Department of Energy - Energy Efficinecy & Rebewable Energy, Washington, DC.

van Lierop, B., Faubert, M., Jiang, Z., 2008. High-temperature extraction in a bleaching sequence: Comparing single and double pressurized tower configurations. Pulp and paper Canada 109, 28-32.

Wan Alwi, S.R., Ismail, A., Manan, Z.A., Handani, Z.B., 2011. A new graphical approach for simultaneous mass and energy minimisation. Applied Thermal Engineering 31, 1021-1030.

Wan Alwi, S.R., Manan, Z.A., 2008. Generic graphical technique for simultaneous targeting and design of water networks. Industrial & engineering chemistry research 47, 2762-2777.

Wang, Y.P., Smith, R., 1994. Wastewater minimisation. Chemical Engineering Science 49, 981-1006.

Wising, U., Berntsson, T., Stuart, P., 2005. The potential for energy savings when reducing the water consumption in a Kraft Pulp Mill. Applied Thermal Engineering 25, 1057-1066.

Xiao, F., Smith, R., 2001. Case studies of heat integration of evaporation systems. 中国化学工程学□ (英文版 9, 224-227.

Zhelev, T., Semkov, K., 2004. Cleaner flue gas and energy recovery through pinch analysis. Journal of Cleaner Production 12, 165-170.

APPENDICES

• *Appendix 1 – Detail of HEX network of Chapter 5 (SEWNA) for mill C*

Table 0-1 - Existing Water HEX network – Mill C (for Fig. 5-16)

#	Code	Source	Tin (^oC)	Tout (^oC)	Q (MW)	A (m^2)	Usage in new network
1	HEX of clean flashed Steam - PM	Clean flashed steam – PM	95	93	2.7	14	Removed
		WW12	2	12			
2	Water economizer #1 of Dryer - PM	Exhaust air of Dryer - PM	75	42.6	5.6	2621	Same place
		WW46	10.5	46			
3	Water economizer #2 of Dryer - PM	Exhaust air of Dryer - PM	75	42.6	5.6	2621	Same place
		WW46	10.5	46			
4	Warm water steam heater – Chem. Prep.	MP Steam	192	185	0.2	1	Removed
		HW55	10.5	55			
5	Indirect contact cooler – Chem. Prep.	Chemicals – Chem. Prep.	29.7	10.1	0.6	249	Same place
		WW20	2	19.7			
6	Steam ejector condenser – Chem. Prep.	Steam & Chemicals – Chem. Prep.	156.9	2.2	1.7	36	Same place
		WW11	2	10.7			
7	Eop Exchanger	Alkaline effluent - Eop	67	25.7	5.5	965	Same place
		WW35.4	12	35.4			
8	Surface condenser - Evaporation	Non-clean steam- Evaporation	74.6	61.6	9.9	79	Enlarged
		WW20	2	19.8			
9	Wet scrubber	Stack gas of RB – Wet scrubber	86	29	16.8	12218	Same place
		WW50	19.8	50			
10	Surface condenser - Digesting	Non-clean steam- Digesting	111.4	91.4	2.2	18	Same place
		HW80	2	80			
11	Non condensable gas surface condenser	Non condensable gas - Digesting			0.2		Same place
		WW47	2	47.2			
12	Chip bin surface condenser	Non condensable gas – Chip bin of Digesting			0.7		Same place
		WW46	2	45.6			
13	Glycol loop/Water HEX - PM	Glycol - PM	132.6	130	3.8	237	Removed
		HW90	48	90			

Table 0-2 - Final Water HEX network- After Applying SEWNA – Mill C (for Fig. 5-16)

#	Code	Source	Tin (ºC)	Tout (ºC)	Q (MW)	A (m^2)	Usage in current network
1	Water economizer #1 of Dryer - PM	Exhaust air of Dryer - PM	75	47.3	3.7	2621	Same place
		WW50	31.1	49.9			
2	Water economizer #2 of Dryer - PM	Exhaust air of Dryer - PM	75	47.3	3.7	2621	Same place
		WW50	31.1	49.9			
3	Indirect contact cooler – Chem. Prep.	Chemicals – Chem. Prep.	29.7	10.1	0.6	249	Same place
		WW20	2	19.7			
4	Steam ejector condenser – Chem. Prep.	Steam & Chemicals – Chem. Prep.	156.9	2.2	0.3	36	Same place
		WW11	2	10.7			
5	Eop Exchanger	Alkaline effluent - Eop	75	25.3	6.3	965	Same place
		WW31	2	31.1			
6	Surface condenser - Evaporation	Non-clean steam- Evaporation	74.6	63.1	8.8	79	Enlarged
		WW25	2	25			
7	Wet scrubber	Stack gas of RB – Wet scrubber	86	34.4	15.2	12218	Same place
		HW57	24.4	57			
8	Surface condenser - Digesting	Non-clean steam- Digesting	111.4	91.4	2.2	18	Same place
		Demineralized water to condensate tank	2	80			
9	Non condensable gas surface condenser	Non condensable gas - Digesting			0.2		Same place
		WW47	2	47.2			
10	Chip bin surface condenser	Non condensable gas – Chip bin of Digesting			0.7		Same place
		WW46	2	45.6			

• *Appendix 2 – Detail of HEX network of Chapter 7 (R-HEN) for mill C*

o HEX network of R-HEN

Table 0-3 - Existing HEX network – Mill C (for Fig. 7-14 and Fig. 7-15)

#	Code	Source	Tin (^oC)	Tout (^oC)	Q (MW)	A (m^2)	Usage in new network
1	Steam -Glycol HEX	MP Steam	192	185	5.5	202	Removed
		Glycol –PM	130	133.7			
2	Glycol loop – Air HEX	Glycol –PM	133.7	132.6	1.7	611	Removed
		Air to Dryer50 – PM	-10	50			
3	Air economizer of Dryer	Exhaust air of Dryer – PM	42.6	36.2	1.8	2042	Same place as 1st Air eco. Of Dryer
		Air to Dryer100 – PM	-10	30			
4	Dryer air steam heater	MP Steam	192	185	3.2	290	Same place
		Air to Dryer100 – PM	30	100			
5	RB air heater	MP steam	192	185	4.9	665	Same place
		Air to RB	-10	169			
6	Air economizer of PB #1	Stack gas-PB # 1	322	128.4	5.1	1608	Same place
		Air to PB #1 &6	55	210			
7	Air economizer of PB #2	Stack gas-PB # 2	234	140.9	1.7	661	Removed
		Air to PB #2	55	172			
8	Air economizer of PB #3	Stack gas-PB # 3	145	109.2	0.9	493	Removed
		Air to PB #3	55	100			
9	PB #3 air steam heater	MP steam	192	185	1.4	329	Removed
		Air to PB #3	100	172			
10	HEX of clean flashed Steam - PM	Clean flashed steam – PM	95	93	2.7	14	Enlarged
		WW12	2	12			
11	Water economizer #1 of Dryer - PM	Exhaust air of Dryer - PM	75	42.6	5.6	2621	Same place
		WW46	10.5	46			
12	Water economizer #2 of Dryer - PM	Exhaust air of Dryer - PM	75	42.6	5.6	2621	Same place
		WW46	10.5	46			
13	Warm water steam heater – Chem. Prep.	MP Steam	192	185	0.2	1	Removed
		HW55	10.5	55			
14	Indirect contact cooler – Chem. Prep.	Chemicals – Chem. Prep.	29.7	10.1	0.6	249	Same place
		WW20	2	19.7			
15	Steam ejector condenser – Chem. Prep.	Steam & Chemicals – Chem. Prep.	156.9	2.2	1.7	36	Same place
		WW11	2	10.7			
16	Eop Exchanger	Alkaline effluent - Eop	67	25.7	5.5	965	Same place
		WW35.4	12	35.4			
17	Surface condenser - Evaporation	Non-clean steam- Evaporation	74.6	61.6	9.9	79	Enlarged
		WW20	2	19.8			

18	Wet scrubber	Stack gas of RB – Wet scrubber	86	29	16.8	12218	Same place
		WW50	19.8	50			
19	Surface condenser - Digesting	Non-clean steam- Digesting	111.4	91.4	2.2	18	Same place
		HW80	2	80			
20	Non condensable gas surface condenser	Non condensable gas - Digesting			0.2		Same place
		WW47	2	47.2			
21	Chip bin surface condenser	Non condensable gas – Chip bin of Digesting			0.7		Same place
		WW46	2	45.6			
22	Glycol loop/Water HEX - PM	Glycol - PM	132.6	130	3.8	237	Removed
		HW90	48	90			

Table 0-4 - Final HEX network- After Applying R-HEN – Mill C (for Fig. 7-14 and Fig. 7-15)

#	Code	Source	Tin (°C)	Tout (°C)	Q (MW)	A (m^2)	Usage in current network
1	1st Air eco. of Dryer	Exhaust air of Dryer – PM	75	48.4	2.5	2042	Same as Air economizer of Dryer
		Air to Dryer100 – PM	-10	55			
2	2nd Air eco. of Dryer	Exhaust air of Dryer – PM	75	48.4	0.5	384	NEW
		Air to Dryer100 – PM	-10	55			
3	Dryer air steam heater	MP Steam	192	185	2.0	290	Same
		Air to Dryer100 – PM	55	100			
4	3rd Air eco. of Dryer	Exhaust air of Dryer – PM	75	48.4	1.8	1441	NEW
		Air to Dryer50 – PM	-10	55			
5	4th Air eco. of Dryer	Exhaust air of Dryer – PM	75	48.4	1.8	1442	NEW
		Air to RB	-10	55			
6	2nd Air eco. of PB #1	Stack gas-PB # 1	165.4	128.4	1.0	374	NEW
		Air to RB	55	90.2			
7	RB air heater	MP steam	192	185	2.1	665	Same
		Air to RB	90.2	169			
8	Air eco. of PB #6	Stack gas-PB # 1	135	70	1.0	961	NEW
		Air to PB #1& 6	55	84.6			
9	1st Air eco. of PB #1	Stack gas-PB # 1	322	165.4	4.2	1608	Same as Air economizer of PB#1
		Air to PB #1& 6	84.6	210			
10	HEX of clean flashed Steam – PM	Clean flashed steam – PM	95	93	2.9	63	Enlarged
		HW77	67.8	77			
11	Surface condenser - Digesting	Non-clean steam- Digesting	111.4	91.4	2.2	18	Same
		HW80	2	80			
12	Indirect contact cooler – Chem. Prep.	Chemicals – Chem. Prep.	29.7	10.1	0.6	249	Same
		WW20	2	19.7			
13	Steam ejector condenser – Chem. Prep.	Steam & Chemicals – Chem. Prep.	156.9	2.2	0.3	36	Same
		WW10.5	2	10.5			

14	Non-clean condensate exchanger-Evaporation	Non-clean condensate- Evaporation	70.4	33	1.8	356	NEW
		Demieralized water to condensate tank	2	60			
15	Blowdown exchanger – RB & PB #1&6	Blowdown-RB & PB #1&6	169.9	12	2.3	264	NEW
		Demieralized water to condensate tank	2	95			
16	Water economizer #1 of Dryer - PM	Exhaust air of Dryer - PM	48.4	36	4.1	2621	Same
		WW34	2	33.8			
17	Water economizer #2 of Dryer - PM	Exhaust air of Dryer - PM	48.4	36	4.1	2621	Same
		WW34	2	33.8			
18	Wet scrubber	Stack gas of RB – Wet scrubber	86	47.9	11.2	12218	Same
		HW70	37.3	70			
19	Eop Exchanger	Alkaline effluent - Eop	67	32	4.7	965	Same
		HW57	2	57			
20	White water exchanger-PM	Overflow – White water tank-PM	60.1	35.6	16.4	3141	NEW
		WW50	2	50			
21	Surface condenser - Evaporation	Non-clean steam- Evaporation	74.6	61.6	9.9	141	Enlarged
		HW57	2	57			
22	Non condensable gas surface condenser	Non condensable gas - Digesting			0.2		Same
		WW47	2	47.2			
23	Chip bin surface condenser	Non condensable gas – Chip bin of Digesting			0.7		Same
		WW46	2	45.6			
24	Acidic effluent exchanger of D0	Acidic effluent of D0-bleaching	57.2	28.6	6.3	1377	NEW
		WW47	2	47			

Table 0-5 - (a) The new HEXs that should be purchased and (b) the existing HEXs that should be enlarged –After applying R- HEN - Mill C (for Fig. 7-14 and Fig. 7-15)

#	Name of HEX	Heat exchanging (MW)	Area (m^2)	Installed cost (M$)
	(a) New HEXs			
1	2nd Air eco. of Dryer	0.5	384	0.42
2	3rd Air eco. of Dryer	1.8	1441	1.88
3	4th Air eco. of Dryer	1.8	1442	1.88
4	2nd Air eco. of PB #1	1.0	374	0.41
5	Air eco. of PB #6	1.0	961	1.16
6	Non-clean condensate exchanger-Evaporation	1.8	356	0.39
7	Blowdown exchanger – RB & PB #1&6	2.3	264	0.29
8	White water exchanger-PM	16.4	3141	5.06
9	Acidic effluent exchanger of D0	6.3	1377	1.78
Total for new HEXs		**32.8**	9740	13.27
	(b) The enlarged existing HEXs			
1	HEX of clean flashed Steam - PM	2.3	49	0.06
2	Surface condenser - Evaporation	4.4	62	0.07
Total for enlarged existing HEXs		**6.7**	**111**	**0.13**
TOTAL		***39.5***	***9851***	***13.40***

o HEX network of Pinch Analysis

Table 0-6 - Existing HEX network – Mill C (for Fig. 7-17 and Fig. 7-18)

#	Code	Source	Tin (°C)	Tout (°C)	Q (MW)	A (m^2)	Usage in new network
1	Steam -Glycol HEX	MP Steam	192	185	5.5	202	Removed
		Glycol –PM	130	133.7			
2	Glycol loop – Air HEX	Glycol –PM	133.7	132.6	1.7	611	Removed
		Air to Dryer50 – PM	-10	50			
3	Air economizer of Dryer	Exhaust air of Dryer – PM	42.6	36.2	1.8	2042	Same place as 1st Air eco. Of Dryer
		Air to Dryer100 – PM	-10	30			
4	Dryer air steam heater	MP Steam	192	185	3.2	290	Same place
		Air to Dryer100 – PM	30	100			
5	RB air heater	MP steam	192	185	4.9	665	Same place
		Air to RB	-10	169			
6	Air economizer of PB #1	Stack gas-PB # 1	322	128.4	5.1	1608	Same place as 1st Air eco. Of PB #1
		Air to PB #1 &6	55	210			
7	Air economizer of PB #2	Stack gas-PB # 2	234	140.9	1.7	661	Removed
		Air to PB #2	55	172			
8	Air economizer of PB #3	Stack gas-PB # 3	145	109.2	0.9	493	Same place as 1st Air eco. Of PB #3
		Air to PB #3	55	100			
9	PB #3 air steam heater	MP steam	192	185	1.4	329	Same place
		Air to PB #3	100	172			
10	HEX of clean flashed Steam - PM	Clean flashed steam – PM	95	93	2.7	14	Same place
		WW12	2	12			
11	Water economizer #1 of Dryer - PM	Exhaust air of Dryer - PM	75	42.6	5.6	2621	Same place
		WW46	10.5	46			
12	Water economizer #2 of Dryer - PM	Exhaust air of Dryer - PM	75	42.6	5.6	2621	Same place
		WW46	10.5	46			
13	Warm water steam heater – Chem. Prep.	MP Steam	192	185	0.2	1	Removed
		HW55	10.5	55			
14	Indirect contact cooler – Chem. Prep.	Chemicals – Chem. Prep.	29.7	10.1	0.6	249	Same place
		WW20	2	19.7			
15	Steam ejector condenser – Chem. Prep.	Steam & Chemicals – Chem. Prep.	156.9	2.2	1.7	36	Same place
		WW11	2	10.7			
16	Eop Exchanger	Alkaline effluent - Eop	67	25.7	5.5	965	Enlarged
		WW35.4	12	35.4			
17	Surface condenser - Evaporation	Non-clean steam- Evaporation	74.6	61.6	9.9	79	Same place
		WW20	2	19.8			
18	Wet scrubber	Stack gas of RB – Wet scrubber	86	29	16.8	12218	Same place
		WW50	19.8	50			

19	Surface condenser - Digesting	Non-clean steam- Digesting	111.4	91.4	2.2	18	Same place
		HW80	2	80			
20	Non condensable gas surface condenser	Non condensable gas - Digesting			0.2		Same place
		WW47	2	47.2			
21	Chip bin surface condenser	Non condensable gas – Chip bin of Digesting			0.7		Same place
		WW46	2	45.6			
22	Glycol loop/Water HEX - PM	Glycol - PM	132.6	130	3.8	237	Removed
		HW90	48	90			

Table 0-7 - Final HEX network- After applying Pinch Analysis – Mill C (for Fig. 7-17 and Fig. 7-18)

#	Code	Source	Tin (^oC)	Tout (^oC)	Q (MW)	A (m^2)	Usage in current network
1	1st Air eco. of Dryer	Exhaust air of Dryer – PM	75	48.4	2.5	2042	Same as Air economizer of Dryer
		Air to Dryer100 – PM	-10	55			
2	2nd Air eco. of Dryer	Exhaust air of Dryer – PM	75	48.4	0.5	384	NEW
		Air to Dryer100 – PM	-10	55			
3	Dryer air steam heater	MP Steam	192	185	2.1	290	Same
		Air to Dryer100 – PM	55	100			
4	3rd Air eco. of Dryer	Exhaust air of Dryer – PM	75	48.4	1.8	1441	NEW
		Air to Dryer50 – PM	-10	55			
5	4th Air eco. of Dryer	Exhaust air of Dryer – PM	75	48.4	1.8	1442	NEW
		Air to RB	-10	55			
6	2nd Air eco. of PB #3	Stack gas-PB # 3	109.3	70	0.6	769	NEW
		Air to RB	55	77			
7	2nd Air eco. of PB #1	Stack gas-PB # 1	165.4	128.4	1.0	537	NEW
		Air to RB	77	112.5			
8	RB air heater	MP steam	192	185	1.5	665	Same
		Air to RB	112.5	169			
9	Air eco. of PB #6	Stack gas-PB # 1	135	70	1.0	961	NEW
		Air to PB #1& 6	55	84.6			
10	1st Air eco. of PB #1	Stack gas-PB # 1	322	165.4	4.2	1608	Same as Air economizer of PB#1
		Air to PB #1& 6	84.6	210			
11	1st Air eco. of PB #3	Stack gas-PB # 3	145	109.3	0.6	493	Same as Air economizer of PB#3
		Air to PB #3	55	100			
12	PB #3 air steam heater	MP steam	192	185	0.9	329	Same
		Air to PB #3	100	172			
13	Surface condenser - Digesting	Non-clean steam- Digesting	111.4	91.4	2.2	18	Same
		HW80	2	80			
14	Indirect contact cooler – Chem. Prep.	Chemicals – Chem. Prep.	29.7	10.1	0.6	249	Same
		WW20	2	19.7			

15	Steam ejector condenser – Chem. Prep.	Steam & Chemicals – Chem. Prep.	156.9	2.2	1.7	36	Same
		WW11	2	11			
16	1st White water exchanger-PM	Overflow – White water tank-PM	60	51.6	5.8	1171	NEW
		WW46	27.9	46			
17	Blowdown exchanger – RB & PB #1, 3 &6	Blowdown-RB & PB #1, 3 &6	165.2	49	2.0	181	NEW
		Demieralized water to condensate tank	39	54.2			
18	Water economizer #1 of Dryer - PM	Exhaust air of Dryer - PM	48.4	36	4.1	2621	Same
		WW34	2	33.8			
19	Water economizer #2 of Dryer - PM	Exhaust air of Dryer - PM	48.4	36	4.1	2621	Same
		WW34	2	33.8			
2	Wet scrubber	Stack gas of RB – Wet scrubber	86	42.8	12.7	12218	Same
		HW59	35.5	59			
21	Eop Exchanger	Alkaline effluent - Eop	67	25	5.6	1006	Enlarged
		WW35.7	11.9	35.7			
22	2nd White water exchanger-PM	Overflow – White water tank-PM	51.6	39.8	8.1	1198	NEW
		WW35.5	2	35.5			
23	Surface condenser - Evaporation	Non-clean steam- Evaporation	74.6	61.6	9.9	93	Enlarged
		WW35.5	2	35.5			
24	Non condensable gas surface condenser	Non condensable gas - Digesting			0.2		Same
		WW47	2	47.2			
25	Chip bin surface condenser	Non condensable gas – Chip bin of Digesting			0.7		Same
		WW46	2	45.6			

Table 0-8 - (a) The new HEXs that should be purchased and (b) the existing HEXs that should be enlarged – After applying Pinch Analysis - Mill C (for Fig. 7-17 and Fig. 7-18)

#	Name of HEX	Heat exchanging (MW)	Area (m^2)	Installed cost (M$)
	(a) New HEXs			
1	2nd Air eco. of Dryer	0.5	384	0.42
2	3rd Air eco. of Dryer	1.8	1441	1.88
3	4th Air eco. of Dryer	1.8	1442	1.88
4	nd Air eco. of PB #3	0.6	769	0.90
5	2nd Air eco. of PB #1	1.0	538	0.60
6	Air eco. of PB #6	1.0	961	1.16
7	1st White water exchanger-PM	5.8	1171	1.46
8	Blowdown exchanger – RB & PB #1, 3 &6	2.0	181	0.20
9	2nd White water exchanger-PM	8.1	1198	1.50
Total for new HEXs		**22.6**	8085	10.00
	(b) The enlarged existing HEXs			
1	Eop Exchanger	0.2	42	0.06
2	Surface condenser - Evaporation	1.5	14	0.02
Total for enlarged existing HEXs		**1.7**	**56**	**0.08**
TOTAL		***24.3***	***8141***	***10.08***

- ***Appendix 3 – Detail of Water Analysis of Chapter 8 (SWAEI) for mill C***

Data to construct Fig. 8-27 at chapter 8 (SEWNA) is similar as Table 5-10, Table 5-11, and Table 5-12 from Chapter 5 (SEWNA).

- ***Appendix 4 – Detail of HEX network of Chapter 8 (SWAEI) for mill C***

Table 0-9 - The extracted data for HEX network design – Mill C (for Fig. 8-31 and Fig. 8-32)

#	Stream	T_{in} (°C)	T_{out} (°C)	ΔH (kW)
	Heat Sinks			
1	Air to dryer100-PM	-10	100	5147
2	Air to RB	-10	169	5010
3	Air to PB#3	55	172	2242 (0)*
4	Air to Dryer50-PM	-10	50	1668
5	Air to PB#1 &6 (Air to PB#1)*	55	210	5228 (3292)*
6	Air to PB#2	55	172	1712 (0)*
7	HW57	2	57	15340
8	HW85 (HW81)*	2	85 (81)	5440 (5190)*
9	HW85 (HW70)*	2	85 (70)*	31614 (25900)*
10	Demineralized water – Condensate tank	2	92 (62)*	12980 (3200)*
	Heat Sources			
1	Non-clean steam- Digesting	111.4	25	2779
2	Non condensable gas-Digesting	75	70	156
3	Non condensable gas- Chip bin of Digesting	75	70	665
4	Alkaline effluent - Eop	83.1 (78.4)*	25	5761 (5370)*
5	Exhaust air of Dryer - PM	75	0	22880
6	Clean flashed steam-PM	95	93	2029
7	Stack gas of RB- Wet scrubber	86	29	17340
8	Non clean steam- Evaopration	74.6	25	10470
9	Stack gas-PB#1	322	129.2	5228
10	Stack gas-PB#2	234	70	3015 (0)*
11	Stack gas-PB#3	145	70	1810 (0)*
12	Chemicals – Chem. Prep.	29.7	10.7	616
13	Steam & Chemicals – Chem. Prep.	153.3	2.2	279
14	Deknotter rejects-Deknotter washer	59.9 (59.7)*	12	105 (104)*
15	Overflow- filtrate tank of washer #2	60.1 (59.1)*	12	454 (450)*
16	Non clean condensate of Evaporation	70.4	25	700
17	Overflow-filtrate tank of washers #3&4	53 (51)*	12	7047 (6661)*
18	Reject of screeners-Washing	53 (51.1)*	12	1248 (1190)*
19	Acidic effluent of D0-bleaching	73.2 (65.5)*	25	10780 (9116)*
20	Overflow-D1 filtrate tank	70.8 (66.3)*	25	1368 (1236)*
21	Rejects of cleaners –PM	71.9 (69.1)*	12	1925 (1582)*
23	Sewer of Venturi oxygenator - Scrubber	78.5	25	396
24	Blowdown of boilers	95	12	1752
25	Stack gas-PB#6	135	70	982 (0)*
26	Mixture of steam & condensate-Condensing turbine	46	45	4099

*the data in parenthesis represents the second targeting temperature, temperature of effluents, heat requirement of sink and heat available of heat source

Table 0-10 - Existing HEX network – Mill C (for Fig. 8-31 and Fig. 8-32)

#	Code	Source	Tin (°C)	Tout (°C)	Q (MW)	A (m^2)	Usage in new network
1	Steam -Glycol HEX	MP Steam	192	185	5.5	202	Removed
		Glycol –PM	130	133.7			
2	Glycol loop – Air HEX	Glycol –PM	133.7	132.6	1.7	611	Removed
		Air to Dryer50 – PM	-10	50			
3	Air economizer of Dryer	Exhaust air of Dryer – PM	42.6	36.2	1.8	2042	Same place as 1st Air eco. Of Dryer
		Air to Dryer100 – PM	-10	30			
4	Dryer air steam heater	MP Steam	192	185	3.2	290	Same place as 1st Air eco. Of Dryer
		Air to Dryer100 – PM	30	100			
5	RB air heater	MP steam	192	185	4.9	665	Same place
		Air to RB	-10	169			
6	Air economizer of PB #1	Stack gas-PB # 1	322	128.4	5.1	1608	Same place
		Air to PB #1 &6	55	210			
7	Air economizer of PB #2	Stack gas-PB # 2	234	140.9	1.7	661	Removed
		Air to PB #2	55	172			
8	Air economizer of PB #3	Stack gas-PB # 3	145	109.2	0.9	493	Removed
		Air to PB #3	55	100			
9	PB #3 air steam heater	MP steam	192	185	1.4	329	Removed
		Air to PB #3	100	172			
10	HEX of clean flashed Steam - PM	Clean flashed steam – PM	95	93	2.7	14	Enlarged
		WW12	2	12			
11	Water economizer #1 of Dryer - PM	Exhaust air of Dryer - PM	75	42.6	5.6	2621	Same place
		WW46	10.5	46			
12	Water economizer #2 of Dryer - PM	Exhaust air of Dryer - PM	75	42.6	5.6	2621	Same place
		WW46	10.5	46			
13	Warm water steam heater – Chem. Prep.	MP Steam	192	185	0.2	1	Removed
		HW55	10.5	55			
14	Indirect contact cooler – Chem. Prep.	Chemicals – Chem. Prep.	29.7	10.1	0.6	249	Same place
		WW20	2	19.7			
15	Steam ejector condenser – Chem. Prep.	Steam & Chemicals – Chem. Prep.	156.9	2.2	1.7	36	Same place
		WW11	2	10.7			
16	Eop Exchanger	Alkaline effluent - Eop	67	25.7	5.5	965	Same place as 1st Eop Exchanger
		WW35.4	12	35.4			
17	Surface condenser - Evaporation	Non-clean steam- Evaporation	74.6	61.6	9.9	79	Enlarged
		WW20	2	19.8			
18	Wet scrubber	Stack gas of RB – Wet scrubber	86	29	16.8	12218	Same place
		WW50	19.8	50			
19	Surface condenser	Non-clean steam- Digesting	111.4	91.4	2.2	18	Same place

	- Digesting	HW80	2	80			
20	Non condensable gas surface condenser	Non condensable gas - Digesting			0.2		Same place
		WW47	2	47.2			
21	Chip bin surface condenser	Non condensable gas – Chip bin of Digesting			0.7		Same place
		WW46	2	45.6			
22	Glycol loop/Water HEX - PM	Glycol - PM	132.6	130	3.8	237	Removed
		HW90	48	90			
23	Blowdown HEX – PB #1	Blowdown of PB #1	188.6	140.5	0.1	19	Relocated as Blowdown HEXs
		Demieralized water to PB #1	130.5	135.4			
24	Blowdown HEX – PB #2	Blowdown of PB #2	188.6	140.5	0.1	18	Removed
		Demieralized water to PB #2	130.5	135.4			
25	Blowdown HEX – PB #3	Blowdown of PB #3	188.6	140.5	0.2	34	Relocated as Blowdown HEXs
		Demieralized water to PB #3	130.5	135.4			
26	Blowdown HEX – PB #6	Blowdown of PB #6	188.6	140.5	0.2	22	Relocated as Blowdown HEXs
		Demieralized water to PB #6	130.5	135.4			

Table 0-11 - Final HEX network – Mill C (for Fig. 8-31 and Fig. 8-32)

#	Code	Source	Tin (°C)	Tout (°C)	Q (MW)	A (m^2)	Usage in current network
1	Air condenser of condensing turbine	Mixture of steam & condensate-Condensing turbine	46	45	4.1	1404	NEW
		Air to Dryer100 & 50– PM & to RB	-10	30			
2	1st Air eco. of Dryer	Exhaust air of Dryer – PM	75	53.2	1.6	2042	Same as Air economizer of Dryer
		Air to Dryer100 – PM	30	55			
3	Dryer air steam heater	MP Steam	192	185	2.1	290	Same
		Air to Dryer100 – PM	55	100			
4	2nd Air eco. of Dryer	Exhaust air of Dryer – PM	75	53.2	1.0	1357	NEW
		Air to Dryer100,50 – PM & to RB	30	55			
5	RB air heater	MP steam	192	185	1.3	665	Same
		Air to RB	122	169			
6	Air economizer of PB #1	Stack gas-PB # 1	322	129.2	4.8	1608	Same
		Air to PB #1& RB	55	210			
7	HEX of clean flashed Steam - PM	Clean flashed steam – PM	95	93	2.0	25	Enlarged
		HW85	2	85			
8	Surface condenser - Digesting	Non-clean steam- Digesting	111.4	91.4	2.0	18	Same
		HW85	2	85			
9	Indirect contact cooler – Chem. Prep.	Chemicals – Chem. Prep.	29.7	10.1	0.6	249	Same
		WW20	2	19.7			
10	Steam ejector condenser – Chem. Prep.	Steam & Chemicals – Chem. Prep.	156.9	2.2	0.3	36	Same
		WW10	2	10			

11	Cooler of filtrate tank washer #3 & 4 overflow-washing	Overflow-filtrate tank of washers #3 & 4	51	221.1	4.9	1418	NEW
		WW40	6.7	40			
12	Cooler of non-clean condensate-Digesting	Condensate of non-clean steam-Digesting	91.4	47.2	0.5	143	NEW
		HW70	40	70			
13	Water economizer #1 of Dryer - PM	Exhaust air of Dryer - PM	53.2	41.5	4.7	2621	Same
		WW38	2	38			
14	Water economizer #2 of Dryer - PM	Exhaust air of Dryer - PM	53.2	41.5	4.7	2621	Same
		WW38	2	38			
15	Wet scrubber	Stack gas of RB – Wet scrubber	86	49.2	11.2	12218	Same
		HW70	38.5	70			
16	1st Eop Exchanger	Alkaline effluent - Eop	78.4	25.1	3.8	965	Same as Eop Exchanger
		HW70	2	70			
17	2nd Eop Exchanger	Alkaline effluent - Eop	78.4	25.1	1.6	421	NEW
		HW70	2	70			
18	Surface condenser - Evaporation	Non-clean steam- Evaporation	74.6	61.6	9.3	124	Enlarged
		HW57	2	57			
19	Non condensable gas surface condenser	Non condensable gas - Digesting			0.2		Same
		WW47	2	47.2			
20	Chip bin surface condenser	Non condensable gas – Chip bin of Digesting			0.7		Same
		WW46	2	45.6			
21	Acidic effluent exchanger of D0	Acidic effluent of D0-bleaching	65.5	52.9	2.8	416	NEW
		HW55	2	55.1			
22	Blowdown HEXs	Blowdown of PB #1 &RB	95	65	0.1	19	Relocated Blowdown HEX- PB#1
		Demieralized water to condensate tank	55	62			
23	Blowdown HEXs	Blowdown of PB #1 &RB	95	65	0.2	34	Relocated Blowdown HEX- PB#3
		Demieralized water to condensate tank	55	62			
24	Blowdown HEXs	Blowdown of PB #1 &RB	95	65	0.1	22	Relocated Blowdown HEX- PB#6
		Demieralized water to condensate tank	55	62			

Table 0-12 - (a) The new HEXs that should be purchased and (b) the existing HEXs that should be enlarged – Mill C (for Fig. 8-31 and Fig. 8-32)

#	Name of HEX	Heat exchanging (MW)	Area (m^2)	Installed cost (M$)
	(a) New HEXs			
1	Air condenser of condensing turbine	4.1	1404	1.82
2	2nd Air eco. of Dryer	1.0	1357	1.75
3	Cooler of filtrate tank washer #3 & 4 overflow- washing	4.9	1418	1.84
4	Cooler of non-clean condensate-Digesting	0.5	143	0.16
5	2nd Eop Exchanger	1.6	421	0.46
6	Acidic effluent exchanger of D0	2.8	416	0.46
Total for new HEXs		**15.0**	**5159**	**6.49**
	(b) The enlarged existing HEXs			
1	HEX of clean flashed Steam - PM	0.9	11	0.02
2	Surface condenser - Evaporation	3.4	45	0.05
Total for enlarged existing HEXs		**4.3**	**56**	**0.07**
TOTAL		***19.3***	***5215***	***6.56***

- ***Appendix 5 – Detail of Water Analysis of Chapter 8 (SWAEI) for mill A***

Table 0-13 - List of all sinks in ascending order of contaminant concentration – Mill A (for Fig. 8-4)

Sink	Flowrate (t/h)	T (ºC)	Contaminant concentration (ppm)
Deknotters	226	89	109,226
Washers #2-4	2500	82	35,317
Washer #1	848	85	27,673
D1	1665	75	21,020
E2	1313	68	8,567
D0	1306	44	7,861
Eop	1255	80	6,876
weak wash storage tank-Recausticizing	112	38	5,025
D2	1732	72	3,262
Screenes-PM	1843	59	317
Cleaners-PM	3983	59	308
Pulp machine-PM	813	64	265
Screeners-washing	1104	60	197
Washer #5	1543	56	184
Washer #1 &2- PM	195	63	132
Precoat Drive filter-Recausticizing	10	78	110
Lime kiln - Recausticizing	100	3	110
Lime mud storage - Recausticizing	8	3	110
Mix mud tank - Recausticizing	69	80	110
Lime mud surge - Recausticizing	11	80	110
Recovery boiler srcubber	4	3	110
Black liquor cooler	16	3	12
Recaust Scrubber	242	3	12
ClO2 Absorption tower – Chem. Prep.	25	3	12
Condensate tank	96	30	12

Table 0-14 - List of all sources in ascending order of contaminant concentration – Mill A (for Fig. 8-4)

Source	Flowrate (t/h)	T(ºC)	Contaminant concentration (ppm)
Washer #1	224	91	116,881
Washers #2-4	3026	84	41,076
D1	1716	75	23,278
E2	1306	69	9,441
Eop‡	1158	80	7,453
D0‡	936	42	6,783
D2	1753	75	3,656
Washer #1 &2- PM	5136	59	327
Pulp machine-PM	1680	61	298
Washer #5	2564	60	197
Recaust Scrubber	242	3	110
3rd press-PM	39	80	100
Black liquor cooler	16	81	12
Lime kiln - Recausticizing	100	8	12
Evaporation non-clean condensate	236	89	0
Clean condensate-soft water production	2	100	0

‡After subtraction from inevitable effluent

Table 0-15 - List of all inevitable effluents – Mill A (for Fig. 8-4)

Inevitable effluent	Flowrate (m^3/h)	T(oC)	Contaminant concentration (ppm)
Deknotter	6	90.5	122,791
Screeners-washing	177	60.1	137
D0†	383	41.6	6,783
Eop*	151	80.2	7,453
Sceeners-PM	21	59.1	142
Evaporation effluent	72	33.1	12
Digesting non-clean condensate	59	74.7	100
Total	**227**		

*Alkaline effluent: 18% of filtrate from Eop washer (Keshtkar et al., 2013); currently: 12%; thus, 12% is chosen

†Acidic effluent: 29% of filtrate from D0 washer (currently: 44) (Keshtkar et al., 2013)

Table 0-16 - List of new connections and the capital cost for purchasing, insulation, and installation of new pipes – Mill A (for Fig. 8-5, Fig. 8-6, and Fig. 8-7)

Pr. #	Project Name	New stream connection		Flowrate (t/h)	Cost (M$)
		From	To		
1	Deknotters	Filtrate tank – Washers #2-4	Deknotters	23	0.12
2	Washer #1	Filtrate tank – Washer #5	Washer #1	164	0.23
3	Washer #1	Filtrate tank – Washer #1&2–PM	Washer #1	154	0.22
4	Washers #2-4	Filtrate tank – Washer #5	Washers #2-4	161	0.22
5	Washers #2-4	Filtrate tank – Washer #1&2–PM	Washers #2-4	12	0.11
6	Washer #5	Filtrate tank – Washer #1&2–PM	Washer #5	185	0.24
7	D0	Filtrate tank – Washer D1	Before D0 washer	150	0.22
8	D0	Filtrate tank – Washer D2	Before D0 washer	37	0.13
9	D0	Hot water 85°C	Before D0 washer	144	0.21
10	D0	Filtrate tank – Washer #1&2–PM	At D0 washer	15	0.11
11	Eop	Filtrate tank – Washer #1&2–PM	At Eop washer	15	0.11
12	D1	Filtrate tank – Washer D2	Before D2 washer	79	0.16
13	D1	Filtrate tank – Washer D2	At D2 washer	9	0.11
14	D1	Filtrate tank – Washer #1&2–PM	At D2 washer	15	0.11
15	E1	Hot water 85°C	Before E2 washer	50	0.14
16	E1	Filtrate tank – Washer D2	At E2 washer	56	0.14
17	E1	Filtrate tank – Washer #1&2–PM	At E2 washer	15	0.11
18	D2	Filtrate tank – Washer #1&2–PM	At D2 washer	15	0.11
19	Scrubber of Recovery boiler	Scrubber – Recausticizing	Scrubber of Recovery boiler	4	0.10
20	Lime mud storage – Recaust.	Scrubber – Recausticizing	Lime mud storage – Recaust.	8	0.10
21	Scrubber – Recausticizing	Lime Kiln – Recausticizing	Scrubber – Recausticizing	100	0.18
22	Lime Kiln cooling – Recaust.	Scrubber – Recausticizing	Lime Kiln cooling – Recaust.	100	0.18
		Total		**1511**	**3.36**

- ***Appendix 6 – Detail of HEX network of Chapter 8 (SWAEI) for mill A***

Table 0-17 – Mixed Cp of 0.163 kg water/ kg dried air humidity of dryer #1 and 0.127 kg water/ kg dried air humidity of dryer #2 exhaust air of the mill at different temperature intervals – Mill A (for Fig. 8-8 and Fig. 8-9)

T interval (°C)	0-10	10-20	20-30	30-34	34-38	38-42	42-46	46-50	50-54	54-58	58-62	62-66	66-70	70-80	80-90
Mixed Cp-dryer #1 (kJ/kg.°C)	0	2.72	4.02	5.36	6.40	7.68	9.29	11.29	13.85	17.77	9.44	1.25	1.25	1.16	0.99
Mixed Cp-dryer #1 (kJ/kg.°C)	0	2.65	3.93	5.22	6.24	7.51	9.07	11.03	12.14	8.26	1.17	1.17	1.17	1.04	0.89

Table 0-18 - The extracted data for HEX network design – Mill A (for Fig. 8-8 and Fig. 8-9)

#	Stream	T_{in} (°C)	T_{out} (°C)	ΔH (kW)
	Heat Sinks			
1	Air to RB	-8	158	16640
2	Air to PB	-8	158	12280
3	Air to Dryer#1-PM	-8	82	2274
4	Air to Dryer#2-PM	-8	82	2543
5	Air to buildings	-8	25	13270
6	Soft water 85	2	85	8641
7	Demineralized water-condensate tank	2	80	6149
8	HW73-Washer #5	2	73	19980
9	HW80-Recausticiizng	2	80	8242
10	HW85	2	85	84050
11	Weak BL of washing	91	108	4092
12	White liquor	81	94	2209
13	BL 52% → 67% of dissolved solid	99	115	24570
14	BL 67% dissolved solid to RB	115	121	7443
	Heat Sources			
1	Scrubber water #3	44	23	23850
2	MP steam condensate of Digesting	168	45	8049
3	Non-clean steam – Evaporation	61	40	34620
4	Weak black liquor of digesting	128	90	7378
5	Exhaust air-Dryer #1-PM	90	2	12400
6	Exhaust air-Dryer #2-PM	75	2	10250
7	Stack gas-RB	313	130	28344
8	Stack gas- PB	262	130	10090
9	Non-clean condensate-Digesting	75	25	3527
10	Washer #2-4 overflow filtrate	84	13	32010
11	Reject of cleaners-washing	81	13	17090
12	Washer#5 overflow filtrate	80	13	5350
13	Acidic effluent-D0	78	13	28520
14	Alkaline effluent-Eop	80	13	10770
15	Rejects of screeners-PM	78	13	1576
16	Rejects of cleaners-PM	78	13	1456
17	Scrubber water #1	35	11	2575
18	Scrubber water #2	50	35	1636
19	Non-condensable gas-Digesting	50	13	2158
20	Non-clean steam-Digesting	95	55	39450
21	Flashed steam-PM	117	100	1860

*the data in parenthesis represents the second targeting temperature, temperature of effluents, heat requirement of sink and heat available of heat source

Table 0-19 - Existing HEX network – Mill A (for Fig. 8-8 and Fig. 8-9)

#	Code	Source	Tin (ºC)	Tout (ºC)	Q (MW)	A (m^2)	Usage in new network
1	Air heater	LP steam	160	155	18.3	1332	Relocated as 1st con. of CT
		Air-To building & Dryers & RB	-8	25			
2	Air economizer of Dryer #1	Exhaust air-Dryer#1-PM	90	66.5	0.8	569	Same place
		Air to Dryer #1-PM	25	55			
3	Air economizer of Dryer #2	Exhaust air-Dryer#2-PM	75	57.4	0.8	797	Same place
		Air to Dryer #2-PM	25	52			
4	RB MP steam air heater	MP steam	185	180	7.6	891	Same place
		Air to RB	25	135			
5	RB HP steam air heater	HP steam	392	276	5.8	398	Same place
		Air to RB	135	218			
6	Air economizer of PB	Stack gas-PB	262	130	10.1	2123	Same place
		Air to PB	-8	128.4			
7	PB HP steam air heater	HP steam	392	276	2.2	127	Relocated and enlarged as 1st HEX of CFST-PM
		Air to PB	128.4	158			
8	Cascade con.	Stack gas- RB	313	156	24.6	814	Enlarged
		BL 52% → 67% dissolved solid	99	115			
9	BL heater	LP steam	160	154	7.5	403	Same place
		BL 67% Dissolved solid to RB	116	121			
10, 11	Surface condenser #1 &2	Non-clean Steam - Evaporation	61	40	34.6	624	Same place
		WW45	2	45			
12	Blow exchanger-Digesting	Non-clean steam – Digesting	95	55	39.5	11892	Same place as 1st blow exchanger-Digesting
		HW84	41	84			
13	HW steam heater	LP ST-HW85	160	155	0.9	6	Removed
		HW85-SH	84	85			
14	Surface condenser-Digesting	Non-condensable gas-Digesting	50	13.1	2.2	3068	Same place
		WW40	3	40			
15	HEX #3 scrubber	Scrubber water#3	44	23	23.9	8899	Same place
		WW34	12.9	34			
16	MP steam condensate exchanger-Digesting	MP ST condensate of Digesting	168	45	8.0	480	Same place
		Soft water 80	2	80			
17	Soft water steam heater	LP ST-SW60	161	101	1.4	5	Removed
		SW60-SH	54	60			
18	HEX #1 scrubber	Scrubber water#1	35	11	2.6	958	Same place
		Demineralised water - condensate tank	1	24.9			
19	HEX #2 scrubber	Scrubber water#2	50	35	1.6	609	Same place
		Demineralised water - condensate tank	24.9	40			
20	Water economizer-	Exhaust air-Dryer#1-PM	66.5	49.3	5.2	2296	Same place

	Dryer #1	WW45	3	45			
21	Black liquor cooler -digesting	Weak BL of Digesting	95.6	90	1.1	97	Enlarged
		HW80 to effluent	3	80			
22	WBL Digesting-WBL washing exchanger	Weak BL of Digesting	128	106.9	4.1	859	Same place
		Weak BL of Washing	91	108			
23	WBL digesting-White liquor exchanger	Weak BL of Digesting	106.9	95.6	2.2	565	Same place
		White liquor	79	94			
24	Cooling coils #2-chemical preparation	Chemicals	100	40	0.1	4	Same place
		FW	3	40			
25	Cooling coils #1-chemical preparation	Chemicals	378	40	0.4	11	Same place
		FW	3	40			

Table 0-20 - Final HEX network – Mill A (for Fig. 8-8 and Fig. 8-9)

#	Code	Source	Tin (°C)	Tout (°C)	Q (MW)	A (m^2)	Usage in current network
1	1st con. of CT	Mixture of condensate and steam from condensing turbine	46	45	4.3	1332	Relocated air heater
		Air-To building	-8	25			
2	2nd con. of CT	Mixture of condensate and steam from condensing turbine	46	45	9.0	2810	NEW
		Air-To building	-8	25			
3	3rd con. of CT	Mixture of condensate and steam from condensing turbine	46	45	0.5	142	NEW
		Air-To dryer #1	-8	25			
4	Air economizer of Dryer #1	Exhaust air-Dryer#1-PM	90	62	0.9	569	Same
		Air to Dryer #1-PM	10	47			
5	1st HEX of CFST-PM	Flashed steam-PM	117	100	0.9	373	Relocated & enlarged PB HP steam air heater
		Air-To dryer #1	47	82			
6	4th con. of CT	Mixture of condensate and steam from condensing turbine	46	45	0.6	185	NEW
		Air-To dryer #2	-8	25			
7	Air economizer of Dryer #2	Exhaust air-Dryer#2-PM	75	57	1.0	797	Same
		Air to Dryer #2-PM	13	47			
8	2nd HEX of CFST-PM	Flashed steam-PM	117	100	1.0	416	NEW
		Air-To dryer #2	47	82			
9	5th con. of CT	Mixture of condensate and steam from condensing turbine	46	45	3.3	1032	NEW
		Air to RB	-8	25			
10	Air eco. of RB	Stack gas- RB	313	287	3.8	421	NEW
		Air to RB	25	63			
11	RB MP steam air heater	MP steam	185	180	5.4	891	Same
		Air to RB	63	135			
12	RB HP steam air heater	HP steam	392	276	4.1	398	Same
		Air to RB	135	218			

13	6th con. of CT	Mixture of condensate and steam from condensing turbine	46	45	2.4	762	NEW
		Air to PB	-8	25			
14	1st Air economizer of PB	Stack gas-PB	262	130	7.61	2123	Same as Air economizer of PB
		Air to PB	-8	161			
15	2nd Air economizer of PB	Stack gas-PB	262	130	2.5	682	NEW
		Air to PB	-8	161			
16	Cascade con.	Stack gas- RB	287	130	24.6	1120	Enlarged
		BL 52% → 67% dissolved solid	99	115			
17	BL heater	LP steam	160	154	7.5	403	Same
		BL 67% Dissolved solid to RB	116	121			
18, 19	Surface condenser #1 &2	Non-clean Steam - Evaporation	61	40	34.6	624	Same
		WW45	2	45			
20	1st Blow exchanger-Digesting	Non-clean steam – Digesting	95	64	26.4	11892	Same as Blow exchanger-Digesting
		HW85	57	85			
21	2nd Blow exchanger - Digesting	Non-clean steam – Digesting	95	64	3.9	1766	NEW
		HW85	57	85			
22	Surface condenser-Digesting	Non-condensable gas-Digesting	50	13.1	2.2	3068	Same
		WW40	3	40			
23	HEX #3 scrubber	Scrubber water#3	44	23	14.0	8899	Same
		WW34	1	34			
24	Acidic effluent exchanger of D0	Acidic effluent-D0	78	56	9.7	2310	NEW
		WW57	44	57			
25	Alkaline effluent exchanger of Eop	Alkaline effluent-Eop	80	56	3.9	873	NEW
		WW57	44	57			
26	Cooler of overflow of FT-W#5	Washer #5 overflow filtrate	80	56	3.9	708	NEW
		WW57	38	57			
27	Cooler of overflow of FT-W#2-4	Washer #2-4 overflow filtrate	84	60	10.9	2346	NEW
		HW73-Washer #5	34	73			
28	MP steam condensate exchanger-Digesting	MP ST condensate of Digesting	168	36	8.6	586	Enlarged
		Soft water 80	2	85			
29	HEX #1 scrubber	Scrubber water#1	35	11	2.6	958	Same
		Demineralised water - condensate tank	1	24.9			
30	HEX #2 scrubber	Scrubber water#2	50	35	1.6	609	Same
		Demineralised water - condensate tank	24.9	40			
31	Water economizer-Dryer #1	Exhaust air-Dryer#1-PM	62	50	4.8	2296	Same
		WW45	3	45			
32	Cooler of Eff. Cle. -Washing	Rejects of cleaners – washing	81	67	3.4	717	NEW
		Demineralised water - condensate tank	40	70			
33	Black liquor cooler	Weak BL of Digesting	95.6	90	1.1	230	Enlarged

	-digesting	Demineralised water - condensate tank	70	80			
34	WBL Digesting-WBL washing exchanger	Weak BL of Digesting	128	106.9	4.1	859	Same place
		Weak BL of Washing	91	108			
35	WBL digesting-White liquor exchanger	Weak BL of Digesting	106.9	95.6	2.2	565	Same place
		White liquor	79	94			
36	Cooling coils #2-chemical preparation	Chemicals	100	40	0.1	4	Same place
		FW	3	40			
37	Cooling coils #1-chemical preparation	Chemicals	378	40	0.4	11	Same place
		FW	3	40			

Table 0-21 - (a) The new HEXs that should be purchased and (b) the existing HEXs that should be enlarged – Mill A (for Fig. 8-8 and Fig. 8-9)

#	Name of HEX	Heat exchanging (MW)	Area (m^2)	Installed cost (M$)
	(a) New HEXs			
1	2nd con. of CT	9.0	2810	4.37
2	3rd con. of CT	0.5	142	0.16
3	4th con. of CT	0.6	185	0.20
4	2nd HEX of CFST-PM	1.0	416	0.46
5	5th con. of CT	3.3	1032	1.26
6	Air eco. Of RB	3.8	421	0.46
7	6th con. of CT	2.4	762	0.89
8	2nd air eco. Of PB	2.5	682	0.78
9	2nd Blow exchanger - Digesting	3.9	1766	2.42
10	Acidic effluent exchanger of D0	9.7	2310	3.39
11	Alkaline effluent exchanger of Eop	3.9	873	1.04
12	Cooler of overflow of FT-W#5	3.9	708	0.82
13	Cooler of overflow of FT-W#2-4	10.9	2346	3.46
14	Cooler of Eff. Cle. -Washing	3.4	717	0.83
Total for new HEXs		**58.8**	**13692**	**20.83**
	(b) The enlarged existing HEXs			
1	1st HEX of CFST-PM	0.6	246	0.27
2	Cascade con.	6.7	306	0.45
3	MP steam condensate exchanger- Digesting	1.6	106	0.12
4	Black liquor cooler -digesting	0.6	127	0.27
Total for enlarged existing HEXs		**9.5**	**791**	**0.99**
TOTAL		***68.3***	***14483***	***21.82***

- ***Appendix 7 – Detail of Water Analysis of Chapter 8 (SWAEI) for mill B-Line 1***

Table 0-22 - List of all sinks in ascending order of contaminant concentration – Mill B, Line 1 (for Fig. 8-13)

Sink	Flowrate (t/h)	T (ºC)	Contaminant concentration (ppm)
Digester	328	71	122,065
Chip bin	4	69	55,674
Washer #1	364	69	55,097
Deknotters	1688	69	55,097
Separators & screeners- Washing	1655	76	26,605
Washer #2 & #3-washing	328	75	24,217
Washer #4	547	81	18,946
O2	656	85	15,436
Eop	1374	70	4,782
E2	1777	67	4,400
D1	1877	65	4,211
D0	1130	73	2,342
D2	1985	62	2,042
Recausticizing	230	85	2,033
Screener #2-PM	1571	53	393
Pulp Machine - PM	95	54	335
Screener #1- PM	2614	54	324
Washer -PM	25	80	0
Stripper condenser-Evap	60	2	0
Condensate tank -Deminerilized water	91	31	0
Lime kiln -Cooling	24	2	0
Vacuum pump – Recaust.	23	2	0
Classifier -Recaust .	1	85	0
Dust vent scrubber exchanger-Recaust A	23	2	0
vacuum pump-PM A	120	2	0

Table 0-23 - List of all sources in ascending order of contaminant concentration – Mill B, Line 1 (for Fig. 8-13)

Source	Flowrate (t/h)	T(ºC)	Contaminant concentration (ppm)
Washer #1	328	71	122,065
Deknotters	4	69	55,674
Washer #2 & 3	2094	69	55,097
Washer #4	2171	76	26,605
O2	1014	86	16,395
D0 ‡	977	72	3,679
Eop ‡	1415	72	4,958
D1	1912	67	4,510
E2	1741	70	5,208
D2	2069	63	2,296
Washer-PM	2595	55	452
Pulp Machine - PM	1869	55	384
Non clean condensate of Evap.	173	69	0
Lime kiln -cooling water	24	12	0
Vacuum pump-PM -seal water	120	2	0

‡After subtraction from inevitable effluent

Table 0-24 - List of all inevitable effluents – Mill B, Line 1 (for Fig. 8-13)

Inevitable effluent	Flowrate (t/h)	T(°C)	Contaminant concentration (ppm)
Deknotters	5	69	56,815
Separators & Screeners-Washing	2	76	26,646
D0†	283	72	3,679
Eop*	255	72	4,958
Screener #1 – PM	21	55	452
Cleaners – PM	1	55	12,298
Screener #2 – PM	8	53	394
Evaporation effluent	50	50	
Stripper condensate-Evaporation	60	2	
Blowdown of RB	9	188	
Rejects of classifier grit	23	53	
Dust vent scrubber exchanger-Recausticizing	4	98	
Total	**719**		

*Alkaline effluent: 18% of filtrate from Eop washer (currently: 29%) (Keshtkar et al., 2013)

†Acidic effluent: 29% of filtrate from D0 washer (currently: 67%) (Keshtkar et al., 2013)

Table 0-25 - List of new connections and the capital cost for purchasing, insulation, and installation of new pipes – Mill B, Line 1 (for Fig. 8-15, Fig. 8-16, and Fig. 8-17)

Pr. #	Project Name	New stream connection		Flowrate (m^3/h)	Cost (M$)
		From	To		
1	Washer #2 &3	Filtrate tank – Washer -PM	Washer #2 &3	29	0.12
2	Washer #2 &3	Filtrate tank – Washer –O2	Washer #2 &3	78	0.16
3	Washer #4	Filtrate tank – Washer -PM	Washer #4	29	0.12
4	Washer #4	Non-clean hot water tank-washing L1	Washer #4	14	0.11
5	O2	Non-clean hot water tank-washing L1	Before washer O2	29	0.12
6	O2	Filtrate tank –washer D0	At Washer O2	140	0.21
7	D0	Filtrate tank – Washer -PM	Before reactor D0	152	0.22
8	D0	Filtrate tank – Washer -PM	Before washer D0	26	0.12
9	Non-clean hot water tank-washing L1	Warm water 20 & 52 from Chemical preparation	Non-clean hot water tank-washing L1	9	0.11
10	Non-clean hot water tank-washing L1	Non-clean condensate-Evaporation of Line 2	Non-clean hot water tank-washing L1	93	0.17
11	Eop	Filtrate tank – Washer -PM	At washer Eop	46	0.14
12	D1	Filtrate tank – Washer -PM	Before washer D1	51	0.14
13	D1	Filtrate tank – Washer D2	Before washer D1	85	0.17
14	E2	Filtrate tank – Washer -PM	Before washer E2	44	0.14
15	D2	Filtrate tank – Pulp machine - PM of Line 2	Before washer D2	37	0.13
16	D2	Filtrate tank – Pulp machine - PM of Line 2	At washer D2	18	0.12
17	Screener #1-PM	HW 84	Before Screener #1-PM	266	0.31
18	Screener #1-PM	HW78	Before Screener #1-PM	258	0.30
19	Screener #1-PM	Vacuum pump seal water	Before Screener #1-PM	43	0.13
20	Screener #2-PM	HW 85	Before screener #2-PM	36	0.13
21	Screener #2-PM	HW 84	Before screener #2-PM	74	0.16
22	Vacuum pump-PM	Vacuum pump seal water	Vacuum pump-PM	77	0.16
23	Dust vents scrubber exchanger-Recaust.	Lime kiln	Dust vents scrubber exchanger-Recaust.	23	0.12
24	Lime kiln	Lime Kiln	Lime kiln	1	0.10
25	Lime kiln	Lime Kiln - line 2	Lime kiln	10	0.11
26	Lime mud mixer-Recaust.	Filtrate tank – Washer Eop	Lime mud mixer-Recaust.	55	0.14
27	Dregs #1 &2 washer – Recaust.	Filtrate tank – Washer Eop	Dregs #1 &2 washer – Recaust.	18	0.12
28	Pre-coat drive-Recaust.	Filtrate tank – Washer Eop	Pre-coat drive-Recaust.	21	0.12
		Total		**1667**	**4.36**

- ***Appendix 8– Detail of Water Analysis of Chapter 8 (SWAEI) for mill B-Line 2***

Table 0-26 - List of all sinks in ascending order of contaminant concentration – Mill B, Line 2 (for Fig. 8-14)

Sink	Flowrate (t/h)	T (ºC)	Contaminant concentration (ppm)
Chipbin	1	80	531,597
Digester	369	70	86,740
Washer #1 &2	414	80	21,956
Deknotter	1768	80	21,956
Separators & Screeners-washing	512	79	19,223
Washer #3	448	74	6,232
D1	2520	71	4,874
Washer #4	938	73	4,658
Eop	2594	74	4,619
E2	2583	71	4,487
D0	2781	65	4,376
Dregs washer Tank -Recaust	43	85	2,033
Lime Dust Slurry tank-Recaust	0	85	2,033
Lime Mud Precoat drive -Recaust	46	85	2,033
D2	2774	70	1,915
Cleaners-PM	2844	76	738
Screeners-PM	1830	77	712
Pulp machine-PM	598	75	671
Washer -PM	35	65	0
Condensate tank B-Deminerilized water	188	31	0
Lime kiln -Cooling	21	2	0
Vacuum pump-Recaust.	16	2	0
Classifier –Recaust.	3	85	0
Dust vent scrubber exchanger-Recaust	2	2	0
Chemical prep.	136	9	0
Vacuum pump-PM	150	2	0

Table 0-27 - List of all sources in ascending order of contaminant concentration – Mill B, Line 2 (for Fig. 8-14)

Source	Flowrate (t/h)	T(ºC)	Contaminant concentration (ppm)
Deknotter1	1	80	531,597
Washer #1&2	414	104	86,740
Washer #3	2644	80	22,127
Washer #4	1238	74	6,232
D1	2564	71	5,099
E2	2551	72	4,921
D0 ‡	2348	65	4,834
Eop ‡	2190	75	4,636
D2	2765	69	2,170
Washer –PM	217	76	745
Pulp machine-PM	3569	76	724
Screener-PM	1776	76	712
Deknotter2	21	80	0
Non clean condensate of Evap.	210	65	0
Lime kiln -cooling	21	12	0
Vacuum pump -Seal water	16	2	0
White liquor cooler - Chem. Prep.	1	20	0
Generator Vacuum-Chem Prep.	8	52	0
vacuum Pump-PM Seal water	150	2	0

‡After subtraction from inevitable effluent

Table 0-28 - List of all inevitable effluents – Mill B, Line 2 (for Fig. 8-14)

Inevitable effluent	Flowrate (t/h)	T(°C)	Contaminant concentration (ppm)
Non clean condensate of Surface condenser of digesting	10	89	0
Separators &Screeners-washing	23	80	22008
Screeners-PM	3	76	757
D0†	295	65	4834
Eop*	422	75	4636
Cleaners-PM	3	76	738
Surface condenser non clean condensate-Evap.	64	57	
Blowdown-RB	11	254	
Blowdown-PB	3	255	
Dregs washer Tank-Recaust.	44	85	
Dust vent Scrubber B Exchanger - Recaust.	3	91	
Barometric condenser - Chemical prep.	5	60	
Reactor(white liquor scrubber) -Chemical prep.	2	11	
Total	**887**		

*Alkaline effluent: 16% of filtrate from Eop washer (currently: 16%) (Keshtkar et al., 2013)

†Acidic effluent: 11% of filtrate from D0 washer (currently: 11%) (Keshtkar et al., 2013)

Table 0-29 - List of new connections and the capital cost for purchasing, insulation, and installation of new pipes – Mill B, Line 2 (for Fig. 8-18, Fig. 8-19, and Fig. 8-20)

Pr. #	Project Name	New stream connection		Flowrate (m^3/h)	Cost (M$)
		From	To		
1	Eop	HW 78	Before Eop washer	68	0.15
2	D1	HW78	Before D1 washer	8	0.10
3	Pulp machine-PM	Vacuum seal water-PM	Pulp machine-PM	54	0.14
4	Vacuum pump-PM	Vacuum seal water-PM	Vacuum seal water-PM	96	0.96
5	Dust vent scrubber exchanger-Recaust.	Lime Kiln	Dust vent scrubber exchanger-Recaust	2	0.10
6	Lime kiln	Lime kiln	Lime kiln	9	0.11
7	Lime kiln	Vacuum pump-Recaust.	Lime kiln	3	0.10
8	Vacuum pump-Recaust.	Vacuum pump-Recaust.	Vacuum pump-Recaust.	13	0.11
9	Dregs washers' tank-Recaust.	Filtrate tank –Eop washer-Line 1	Dregs washers' tank-Recaust.	18	0.12
10	Pre-coat drive-Recaust.	Filtrate tank –Eop washer-Line 1	Pre-coat drive-Recaust.	18	0.12
		Total		**289**	**0.98**

- ***Appendix 9 – Detail of HEX network of Chapter 8 (SWAEI) for mill B***

Table 0-30 – Mixed Cp of 0.333 kg water/ kg dried air humidity of dryer exhaust air of the Line 1 of mill B at different temperature intervals (for Fig. 8-21, Fig. 8-22, and Fig. 8-23)

T interval (°C)	0-10	10-20	20-30	30-34	34-38	38-42	42-46	46-50	50-54	54-58	58-62	62-66	66-70	70-80	80-132
Mixed Cp (kJ/kg.°C)	0	2.72	4.03	5.37	6.41	7.70	9.31	11.32	13.89	17.2	17.4	17.6	17.8	18	1.1

Table 0-31 – Mixed Cp of 0.358 kg water/ kg dried air humidity of dryer exhaust air of the Line 2 of mill B at different temperature intervals (for Fig. 8-21, Fig. 8-22, and Fig. 8-23)

T interval (°C)	0-10	10-20	20-30	30-34	34-38	38-42	42-46	46-50	50-54	54-58	58-62	62-66	66-70	70-80	80-131
Mixed Cp (kJ/kg.°C)	0	2.72	4.03	5.37	6.41	7.7	9.31	13.2	13.89	17.5	18	18.5	19	19.5	1.1

Table 0-32 - The extracted data for HEX network design – Whole Mill B (for Fig. 8-21, Fig. 8-22, and Fig. 8-23)

#	**Stream**	**T_{in} (°C)**	**T_{out} (°C)**	**ΔH (kW)**
	Heat Sinks			
1	Air to dryer-PM L1	-8	90	3251
2	Air to dryer-PM L2	-8	90	3251
3	Air to RB L1	45	200 (80)	11310 (2553)
4	Air to RB L2	35	200 (80)	13030 (3553)
5	Air to PB L2	35	200 (80)	5229 (1426)
6	Air to space	-8	25	13620
7	Glycol – PM L1	61	70	1085
8	Glycol – PM L2	66	75 (71)	1085 (597)
9	BL 52% → 67% of dissolved solid – L1	92	123	14960
10	Non-clean hot water-Recaust. L1	74	85	1642
11	Non-clean hot water- Washing L1	68	85 (68)	5319 (0)
12	Demineralized water-condensate tank L1	31	92 (70)	6931 (4431)
13	Demineralized water-condensate tank L2	31	95 (73)	15650 (10270)
14	Vacuum seal water- PM L1	2	85 (60)	4149 (2899)
15	White water – PM L2	83.8 (81.8)	85 (82.4)	5201 (3849)
16	HW85 – Evap. L1 (HW84)	2	85 (84)	47360 (46790)
17	HW85 – Evap. L2 (HW78)	2	85 (78)	77070 (70570)
18	HW85	2	85	24360
19	HW85 (HW72)	2	85 (72)	13550 (11448)
	Heat Sources			
1	Glycol – PM L1	70	61	1085
2	Glycol – PM L2	75	66	1085
3	Exhaust air of dryer – PM L1	132	2	35380
4	Exhaust air of dryer – PM L1	131	2	37210
5	Stack gas – RB L1	164	134	14960
6	Stack gas – RB L2	217	130	11750
7	Stack gas – PB L2	150	130	966
8	Non-clean steam #1– Evaporation L1	61	25	33550
9	Non-clean steam #2– Evaporation L1	79	25	5453

10	Non-clean steam – Evaporation L2	57	25	44300
11	Non-clean steam – Digesting L2	100	25	3505
12	Green liquor – Recaust. L1	142	95	6487
13	Green liquor – Recaust. L2	110	94	4745
14	Chemicals #1 – Chem. Prep.	98	52	2691
15	Chemicals #2 – Chem. Prep.	81	20	6
16	Alkaline effluent – Eop L1	82	25	16180
17	Alkaline effluent – Eop L2	76	25	24730
18	Acidic effluent – D0 L1	79 (75)	25	29330 (27030)
19	Acidic effluent – D0 L2	79 (72)	25	18210 (15780)
20	Clean flashed steam – PM L1	110	95	4651
21	Overflow of filtrate tank of washer #4 – L1	83 (80)	12	11540 (11210)
22	Overflow of filtrate tank of washer #3 – L2	91 (79)	12	5646 (4518)
23	Blow of digesting – L2	107	70	15170
24	Blowdown water – RB L1	100	12	594
25	Blowdown water – PB & RB L2	100	12	984
26	Clean condensate of dryer – PM L2	147	65	4185
27	Reject- Deknotters L1	77 (75)	12	3188 (3087)
28	Reject- Separators and screeners- Washing L1	83 (80)	12	177 (171)
29	Reject-Screeners #1-PM L1	84 (80)	12	1733 (1627)
30	Reject-Cleaners – PM L1	84 (80)	12	42 (39)
31	Reject-Screener #2 – PM L1	84 (80)	12	696 (658)
32	Grits of classifier-Recaust. L1	56	25	964
33	Reject- Separators and screeners- Washing L2	91 (79)	12	2132 (1799)
34	Reject-Screeners-PM L2	84 (82)	12	283 (273)
35	Reject-Cleaners – PM L2	84 (82)	12	213 (206)
36	Grits of classifier-Recaust. L2	84	25	3157
37	Mixture of condensate and steam-condensing turbine L1	46	45	0 (62860)
38	Mixture of condensate and steam-condensing turbine L2	46	45	0 (59420)

*the data in parenthesis represents the second targeting temperature, temperature of effluents, heat requirement of sink and heat available of heat source

Table 0-33 - Existing HEX network – Whole Mill B (for Fig. 8-21, Fig. 8-22, and Fig. 8-23)

#	Code	Source	Tin (°C)	Tout (°C)	Q (MW)	A (m^2)	Usage in new network
1	Space air heater	LP steam	-8	25	13.6	1175	Relocated as 1st con. of CT – L2
		Air-To building	170	100			
2	Exhaust air-Glycol HEX – L1	Exhaust air of dryer - PM L1	87.4	79.1	1.1	873	Same place
		Glycol –PM L1	61	70			
3	Air HEX –Glycol loop – L1	Glycol –PM L1	70	61	1.1	780	Same place
		Air to Dryer – PM L1	-8	24.7			
4	Air economizer of Dryer- L1	Exhaust air of dryer – PM L1	132	87.4	2.2	1198	Same place
		Air to Dryer – PM L1	24.7	90			
5	Exhaust air-Glycol HEX – L2	Exhaust air of dryer - PM L1	87.3	79.2	1.1	1220	Same place
		Glycol –PM L2	66	75			

6	Air HEX –Glycol loop – L2	Glycol –PM L2	75	66	1.1	715	Same place
		Air to Dryer – PM L2	-8	24.7			
7	Air economizer of Dryer- L2	Exhaust air of dryer – PM L2	131	87.3	2.2	1213	Same place 2nd air eco. Of dryer – L2
		Air to Dryer – PM L2	24.7	90			
8	Air heater of RB L1	LP steam	170	143	2.6	301	Relocated and enlarged as 1st air eco. Of dryer – L2
		Air to RB L1	45	80			
9	Air heater of RB & PB L2	LP steam	170	143	5.0	559	Relocated as 1st con. of CT – L1
		Air to RB & PB L2	35	80			
10	SC #1 – Evap. L1	Non-clean steam#1-Evaporation L1	61	50	32.1	931	Same place
		HW 67	2	57			
11	SC #2 – Evap. L1	Non-clean steam#2-Evaporation L1	79	76	5.0	156	Same place
		HW 67	57	67			
12	Water heater #1 – L1	LP steam	170	147	13.2	69	Relocated as cooler of clean flashed steam – PM L1
		HW80	60	80			
13	Water heater #2 – L1	LP steam	170	147	5.6	29	Relocated and enlarged as Cooler of non-clean steam of Digesting L2
		HW80	60	80			
14	GL cooler – Recaust. L1	Green liquor –Recaust. L1	142	95	6.5	318	Enlarged as 2nd GL cooler – Recaust. L1
		HW 80	2	80			
15	Contaminated water heater	LP steam	170	120	4.0	29	Relocated as 1st cooler of RB & PB blowdown water–L2
		Non-clean hot water-Recaust. L1	74	85			
16	Water economizer –Dryer L1	Exhaust air of dryer – PM L1	79.1	78.5	0.5	128	Same place as 1st water eco. Dryer L1
		WW40	2	40			
17	GL cooler – Recaust. L2	Green liquor –Recaust. L2	110	94	4.7	419	Enlarged
		HW 95	2	95			
18	Blow cooler – Digesting L2	Blow of digesting – L2	104	70	14.0	952	Enlarged as 2nd blow cooler – Digesting L2
		HW60	2	60			
19	SC of Evap. L2	Non-clean steam-Evaporation L2	57	52	42.3	781	Same place
		WW47	2	47			
20	Cooler of non-clean steam of Digesting L2	Non-clean steam-Digesting L2	100	89	0.6	4	Removed
		WW55	2	55			
21	Condensate cooler – PM L2	Clean condensate of dryer – PM L2	147	65	1.6	18	Enlarged as cooler of condensate - PM L2 (for white water heating)
		HW65	50	65			
22	Water heater – L2	LP steam	170	147	2.8	14	Relocated and enlarged as 2nd cooler of RB & PB blowdown water–L2
		HW65	60	65			
23	SC of Chemical preparation	Chemicals #2 – Chem. Prep.	81	20	0.01	1	Same place
		FW	2	50			
24	Indirect contact cooler- Chemical preparation	Chemicals #1 – Chem. Prep.	98	52	2.7	206	Same place
		FW	2	50			

Table 0-34 - Final HEX network – Whole Mill B (for Fig. 8-21, Fig. 8-22, and Fig. 8-23)

#	Code	Source	Tin (ºC)	Tout (ºC)	Q (MW)	A (m^2)	Usage in current network
1	1st con. of CT – L1	Mixture of condensate and steam – Condensing turbine L1	46	45	1.8	559	Relocated Air heater of RB & PB L2
		Air to space	-8	25			
2	2nd con. of CT – L1	Mixture of condensate and steam – Condensing turbine L1	46	45	5.0	1566	NEW
		Air to space	-8	25			
3	1st con. of CT – L2	Mixture of condensate and steam – Condensing turbine L2	46	45	3.8	1175	Space air heater
		Air to space	-8	25			
4	2nd con. of CT – L2	Mixture of condensate and steam – Condensing turbine L2	46	45	3.0	950	NEW
		Air to space	-8	25			
5	Exhaust air-Glycol HEX – L1	Exhaust air of dryer - PM L1	87.4	79.1	1.1	873	Same
		Glycol –PM L1	61	70			
6	Air HEX –Glycol loop – L1	Glycol –PM L1	70	61	1.1	780	Same
		Air to Dryer – PM L1	-8	24.7			
7	Air economizer of Dryer- L1	Exhaust air of dryer – PM L1	132	87.4	2.2	1198	Same
		Air to Dryer – PM L1	24.7	90			
8	Exhaust air-Glycol HEX – L2	Exhaust air of dryer - PM L2	80	79	0.6	1220	Same
		Glycol –PM L2	66	71			
9	1st air eco. Of Dryer – L2	Exhaust air of dryer - PM L2	79	78	1.1	454	Relocated and enlarged Air heater of RB L1
		Air to dryer – PM L2	-8	25			
10	Air HEX –Glycol loop – L1	Glycol –PM L2	71	66	0.6	715	Same
		Air to Dryer – PM L2	25	43			
11	2nd air eco. Of Dryer – L2	Exhaust air of dryer - PM L2	110	80	1.2	1213	Same
		Air to dryer – PM L2	43	90			
12	3rd air eco. Of Dryer – L2	Exhaust air of dryer - PM L2	110	80	0.4	401	NEW
		Air to dryer – PM L2	43	90			
13	Air eco. of RB – L2	Stack gas – RB L2	217	161	7.6	1663	NEW
		Air to RB L1, PB L2, & RB L2	39	80			
14	SC #1 – Evap. L1	Non-clean steam#1-Evaporation L1	61	50	32.1	931	Same
		HW 67	2	57			
15	SC #2 – Evap. L1	Non-clean steam#2-Evaporation L1	79	76	5.0	156	Same
		HW 67	57	67			
16	2nd GL cooler – Recaust. L1	Green liquor –Recaust. L1	130	95	4.8	500	Enlarged GL cooler – Recaust. L1
		HW 84	67	84			
17	GL cooler – Recaust. L2	Green liquor –Recaust. L2	110	94	4.7	670	Enlarged
		HW 84	67	84			
18	Cooler of Alkaline effluent L1	Alkaline effluent – Eop L1	82	25	16.2	3892	NEW
		HW72	2	72			

19	Cooler of Acidic effluent L1	Acidic effluent – D0 L1	75	53	11.8	1760	NEW
		HW65	2	65			
20	Cooler of clean flashed steam – PM L1	Clean flashed steam – PM L1	110	95	4.7	69	Relocated Water heater #1 – L1
		HW85	67	85			
21	1st GL cooler – Recaust L1	Green liquor –Recaust. L1	142	130	1.6	113	NEW
		Non-clean hot water- Recaust. L1	74	85			
22	1st Water economizer –Dryer L1	Exhaust air of dryer – PM L1	79.1	75	0.4	128	Same Water economizer –Dryer L1
		Vacuum seal water – Pm L1	2	60			
23	2nd Water economizer –Dryer L1	Exhaust air of dryer – PM L1	79.1	75	2.5	899	NEW
		Vacuum seal water – Pm L1	2	60			
24	Cooler of overflow of FT-W#4 – L1	Overflow of filtrate tank of washer #4 – L1	80	53	4.4	1088	NEW
		Demineralized water- Condensate tank L1	31	70			
25	SC of Evap. L2	Non-clean steam-Evaporation L2	57	52	42.3	781	Same
		WW47	2	47			
26	Cooler of overflow of FT-W#3 - L2	Overflow of filtrate tank of washer #3 – L2	79	57	1.5	562	NEW
		HW69	47	69			
27	Cooler of Alkaline effluent – L2	Alkaline effluent – Eop L2	76	56	9.6	3787	NEW
		HW66	47	66			
28	1st cooler of Acidic effluent L2	Acidic effluent – D0 L2	72	61	3.7	1013	NEW
		HW58	47	58			
29	2nd Blow cooler – Digesting L2	Blow of digesting – L2	78	70	3.3	1078	Enlarged Blow cooler – Digesting L2
		HW67	58	67			
30	1st Blow cooler – Digesting L2	Blow of digesting – L2	104	78	10.6	2254	NEW
		HW78	67	78			
31	Cooler of non-clean steam of Digesting L2	Non-clean steam-Digesting L2	100	89	3.1	35	Relocated and enlarged Water heater #2 – L1
		HW85	2	85			
32	2nd cooler of acidic effluent L2	Acidic effluent – D0 L2	61	47	4.6	1308	NEW
		Demineralized water- Condensate tank L2	31	50			
33	1st cooler of RB & PB blowdown water – L2	Blowdown – PB & RB L2	100	60	0.19	29	Relocated Contaminated water heater
		Demineralized water- Condensate tank L2	50	52			
34	2nd cooler of RB & PB blowdown water – L2	Blowdown – PB & RB L2	100	60	0.26	40	Relocated and enlarged Water heater – L2
		Demineralized water- Condensate tank L2	50	52			
35	Water economizer of PB L2	Stack gas – PB L2	150	130	1.0	161	NEW
		Demineralized water- Condensate tank L2	52	56			
36	Water economizer of RB L2	Stack gas – RB L2	161	130	4.2	744	NEW
		Demineralized water- Condensate tank L2	56	73			
37	White water economizer – Dryer L2	Exhaust air of dryer – PM L2	131	110	1.0	395	NEW
		White water – PM L2	81.8	82			
38	Cooler of	Clean condensate of dryer – PM L2	147	92	2.8	44	Enlarged Condensate

	condensate of dryer – PM L2	White water – PM L2	82	82.4			cooler – PM L2
39	SC of Chemical preparation	Chemicals #2 – Chem. Prep.	81	20	0.01	1	Same
		FW	2	50			
40	Indirect contact cooler- Chemical preparation	Chemicals #1 – Chem. Prep.	98	52	2.7	206	Same
		FW	2	50			

Table 0-35 - (a) The new HEXs that should be purchased and (b) the existing HEXs that should be enlarged – Whole Mill B (for Fig. 8-21, Fig. 8-22, and Fig. 8-23)

#	Name of HEX	Heat exchanging (MW)	Area (m^2)	Installed cost (M$)
	(a) New HEXs			
1	2nd con. of CT – L1	5.0	1566	2.03
2	2nd con. of CT – L2	3.0	950	1.11
3	3rd air eco. Of Dryer – L2	0.4	401	0.43
4	Air eco. of RB – L2	7.6	1663	2.18
5	Cooler of Alkaline effluent L1	16.2	3892	6.56
6	Cooler of Acidic effluent L1	11.8	1760	2.34
7	1st GL cooler – Recaust L1	1.6	113	0.13
8	2nd Water economizer –Dryer L1	2.5	899	1.04
9	Cooler of overflow of FT-W#4 – L1	4.4	1088	1.30
10	Cooler of overflow of FT-W#3 - L2	1.5	562	0.61
11	Cooler of Alkaline effluent – L2	9.6	3787	6.32
12	1st cooler of Acidic effluent L2	3.7	1013	1.20
13	1st Blow cooler – Digesting L2	10.6	2254	3.20
14	2nd cooler of acidic effluent L2	4.6	1308	1.63
15	Water economizer of PB L2	1.0	161	0.17
16	Water economizer of RB L2	4.2	744	0.84
17	White water economizer – Dryer L2	1.0	395	0.42
Total for new HEXs		**88.8**	**22556**	**33.23**
	(b) The enlarged existing HEXs			
1	1st air eco. Of Dryer – L2	0.4	153	0.20
2	2nd GL cooler – Recaust. L1	1.8	182	0.20
3	GL cooler – Recaust. L2	1.8	251	0.28
4	2nd Blow cooler – Digesting L2	0.4	126	0.16
5	Cooler of non-clean steam of Digesting L2	0.5	6	0.01
6	2nd cooler of RB & PB blowdown water – L2	0.3	26	0.04
7	Cooler of condensate of dryer – PM L2	1.7	26	0.04
Total for enlarged existing HEXs		**6.8**	**770**	**0.92**
TOTAL		***95.6***	***23326***	***34.15***

- ***Appendix 10–Specification of Turbine in Three Mills of Chapter 8***

Table 0-36 - Thermal and mechanical efficiencies of turbines in three mills (for Fig. 8-10, Fig. 8-24, and Fig. 8-33)

	MP back pressure turbine		LP back pressure turbine		Condensing turbine	
	Thermal efficiency (%)	Mechanical efficiency (%)	Thermal efficiency (%)	Mechanical efficiency (%)	Thermal efficiency (%)	Mechanical efficiency (%)
Mill A	69	96	70	98	70	98
Mill B- Line 1	67	94	67	95	70	98
Mill B- Line 2	70	93	70	94	70	98
Mill C	70	98	70	98	70	98