DYNAMIC ANALYSIS OF ANISOTROPIC OPEN CYLINDRICAL SHELLS

A. SELMANE and A.A. LAKIS

Department of Mechanical Engineering
École Polytechnique de Montréal
Campus de l'Université de Montréal
C.P. 6079, Succ. Centre-ville
Montréal, Québec, Canada, H3C 3A7

ABSTRACT

This report presents a method for the dynamic and static analysis of thin, elastic, anisotropic and non-uniform open cylindrical shells.

The open shells are assumed to be freely simply-supported along their curved edges and to have arbitrary straight-edge boundary conditions. The method is a hybrid of finite element method and classical shell theories.

The shell is subdivided into cylindrical panel segment finite elements, the displacement functions are derived from Sanders' equation for thin cylindrical shells. Expressions for the mass and stiffness are determined by precise analytical integration.

The free vibration of open and closed cylindrical shells are studied by this method as well as anisotropic shells and shells having circumferentially varying thicknesses. The results obtained reveal that the frequencies calculated by this method are in good agreement with those obtained by others.

1. INTRODUCTION

The analysis of thin shells under static or dynamic load has been the focus of many theories. Most of the research in this field has involved analysis of linear thin closed cylindrical shells. Very little is known concerning the dynamics of open cylindrical shells with circumferentially varying geometry and material properties.

This paper presents a method for the dynamic and static analysis of thin, elastic, anisotropic and circumferentially non-uniform open cylindrical shells.

The first attempt to formulate a bending theory of thin shells from the general equations of elasticity was made by Aron in 1874, and was followed in 1988 by a successful approximate theory known as Love's first approximation [1]. Since then the theory of elastic shells has repeatedly been re-examined, [2]-[8].

Open cylindrical shells (panels) have been analyzed by a number of authors. In general, the finite element method was used for solving these problems [9]-[16]. Various types of finite elements were used and a polynomial displacement functions were assumed.

Boyd [17] analysed a simply supported open cylindrical shell by solving Donell equations. Kurt and Boyd [18] used a trigonometric and polynomials displacement function and solved the dynamics of simply supported cylindrical panels. Strinivasan and Bobby [19] developed a matrix method for analysis of clamped cylindrical shell panels by using a Green function. Massalas et al. [20] analyzed a non-circular cylindrical panel by choosing a double series of cosine and sine for the displacement functions.

Belvins [21] simplified the work of Sewall [22] by studying an open cylindrical shell. Leissa et al. [23] analyzed the vibration of cantilevered cylindrical panels by using the Ritz method, with algebraic polynomial trial functions for the displacements.

Tonin and Bies [24] used the Rayleigh-Ritz method; Suzuki and Leissa [25]-[26], analysed the free vibration of circular and non-circular cylindrical shells having circumferentially varing thickness. Srinivasan and Krishnan [27] calculated the natural frequencies of cylindrical panels with clamped edges in the lateral direction and free to move in the in-plane directions. Cheung et al. [28] applied the Spline finite strip method to the forced vibration analysis of a singly curved shell panel.

Recently, Kumar and Singh [29] analysed the vibration of non-circular cylindrical shells. This analysis is based on the Ritz method in which a combination of eigenfunctions

for beams and quintic Bezier functions are used to represent the displacement. Jiang and Olsen [30] developed a finite element to analyse the vibration of orthogonally stiffened cylindrical shells and panels. They used a combination of polynomials and analytical functions to formulate the displacement functions.

Leissa [31] collected the work of several researchers into one excellent book. We find in different types of shells and panels, a particular study of Heri [32] in analytical and experimental analysis have been used to compare with our study. In that work the solution is developed for the Donnell-Mushtari theory neglecting tangential inertia, where the straight edges of the panel are free and the others edges are supported by shear diaphragms.

One of the most important criteria in determining the versatility of a method is the capacity to predict, with precision, both the high and the low frequencies. This criterion demands the use of a great many elements in the finite element method, and in order to meet it, our research group has developed a hybrid type of finite element, wherein the displacement functions in the finite element method are derived from Sanders' classical shell theory [5]. This method has been applied with satisfactory results to the dynamic linear and non-linear analysis of cylindrical [33]-[39], conical [40], spherical [41], isotropic and anisotropic, uniform and axially non-uniform shells, both empty and liquid-

filled. This method has also been applied to the dynamic analysis of circular and annular plates [42], [43].

The purpose of this study is to explore the static and dynamic analysis of thin, elastic, anisotropic and non-uniform open cylindrical shells subjected to a flowing fluid. Here we consider the problem of panels which are freely simply-supported along their curved edges and have arbitrary straight edge boundary conditions. The effect of the flowing fluid on the natural frequencies of these panels will be the subject of a later work.

2. FUNDAMENTAL EQUATIONS FOR OPEN CYLINDRICAL SHELLS

Sanders' thin shell theory [5] is used in order to obtain the equations of motion. These equations are based on Love's first approximation [1] and give zero strain for small rigid-body motion, this is not the case with other theories. The geometry of the mean surface of the shell studied and the coordinates used are shown in Figure 1.

The equilibrium equations of an open cylindrical shell may be written as follows :

$$\frac{\partial N_{xx}}{\partial x} + \frac{1}{R}\frac{\partial \bar{N}_{x\theta}}{\partial \theta} - \frac{1}{2R^2}\frac{\partial \bar{M}_{x\theta}}{\partial \theta} = 0$$

$$\frac{1}{R}\frac{\partial N_{\theta\theta}}{\partial \theta} + \frac{\partial \bar{N}_{x\theta}}{\partial x} + \frac{3}{2R}\frac{\partial \bar{M}_{x\theta}}{\partial x} + \frac{1}{R^2}\frac{\partial M_{\theta\theta}}{\partial \theta} = 0 \qquad \textbf{(1)}$$

$$\frac{\partial^2 M_{xx}}{\partial x^2} + \frac{2}{R}\frac{\partial^2 \bar{M}_{x\theta}}{\partial x\, \partial \theta} + \frac{1}{R^2}\frac{\partial^2 M_{\theta\theta}}{\partial \theta^2} - \frac{N_{\theta\theta}}{R} = 0$$

where N_x, N_θ, $\bar{N}_{x\theta}$, M_x, M_θ and $\bar{M}_{x\theta}$ are the stress components and x and θ are the coordinates of the shell.

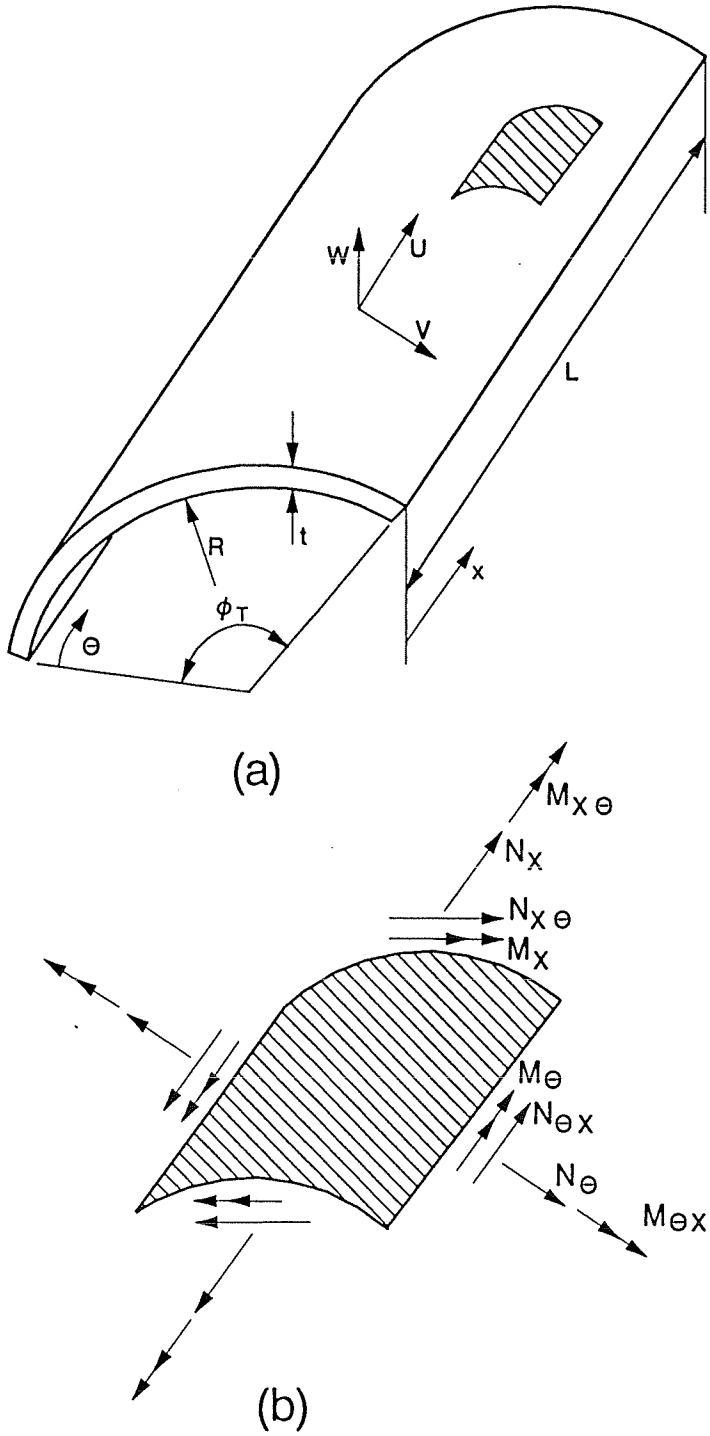

Figure 1: (a) Open cylindrical shell geometry

(b) Differential element for an open cylindrical shell.

The strain vector of the middle surface is

$$\{\epsilon\} = \{\epsilon_x, \epsilon_\theta, 2\bar{\epsilon}_{x\theta}, \kappa_x, \kappa_\theta, 2\bar{\kappa}_{x\theta}\}^T$$

where ϵ_x, ϵ_θ are the in-plane tensile or compressive strains, $2\bar{\epsilon}_{x\theta}$ is the in-plane shear, κ_x, κ_θ are the bending components and $2\bar{\kappa}_{x\theta}$ is the torsion of middle surface during deformation. For a linear elastic behaviour, the strain vector is related to the displacements through the following equation:

$$\{\epsilon\} = \left\{ \begin{array}{c} \dfrac{\partial U}{\partial x} \\ \\ \dfrac{1}{R}\left(\dfrac{\partial V}{\partial \theta} + W\right) \\ \\ \dfrac{\partial V}{\partial x} + \dfrac{1}{R}\dfrac{\partial U}{\partial \theta} \\ \\ \dfrac{-\partial^2 W}{\partial x^2} \\ \\ \dfrac{1}{R^2}\left(\dfrac{\partial^2 W}{\partial \theta^2} - \dfrac{\partial V}{\partial \theta}\right) \\ \\ -\dfrac{2}{R}\dfrac{\partial^2 W}{\partial x\,\partial \theta} + \dfrac{3}{2R}\dfrac{\partial V}{\partial x} - \dfrac{1}{2R^2}\dfrac{\partial U}{\partial \theta} \end{array} \right\} \qquad (2)$$

where U, V, W are axial, tangential and radial displacements.

For an anisotropic and elastic material, the constitutive equation which links the stress vector to the strain vector is

$$\{\sigma\} = [P]\{\epsilon\} \tag{3}$$

where [P] is the elasticity matrix, in which the general term is designated by Pij(i = 1,..., 6 ; j = 1,..., 6) and given in reference [44].

For isotropic material, the only non-vanishing terms are:

$$\begin{aligned} P_{11} &= P_{12} = D & P_{44} &= P_{55} = K \\ P_{12} &= P_{21} = \nu D & P_{45} &= P_{54} = \nu K \\ P_{33} &= \frac{(1-\nu)}{2} D & P_{66} &= \frac{(1-\nu)}{2} K \end{aligned} \tag{4}$$

where D, the membrane stiffness and K, the bending stiffness, are given by:

$$D = \frac{Et}{1-\nu^2} \qquad K = \frac{Et^3}{12(1-\nu^2)} \tag{5}$$

E being Young's modulus, ν Poisson's ratio and t the shell thickness.

The elements P_{ij} of [P] characterize the shell's anisotropy which depends on the mechanical properties of the material of the structure.

By substituting equations (2) and (3) in the equilibrium equations (1), we obtain new equations (6) in terms of axial, tangential and radial displacements (U, V, W) of the mean surface of the shell and in terms of the element P_{ij} of the matrix of elasticity [P], these equations are:

$$
\begin{aligned}
L_1\ (U,V,W,P_{ij}) &= 0 \\
L_2\ (U,V,W,P_{ij}) &= 0 \\
L_3\ (U,V,W,P_{ij}) &= 0
\end{aligned}
\tag{6}
$$

where L_k (k = 1, 2, 3) are three linear differential operators, the form of which is fully explained in Appendix A-1.

The solution of equations (6) will permit us to derive the displacement functions.

3. DISPLACEMENT FUNCTIONS

The finite element used in this theory, as shown in Figure 2, is a cylindrical panel segement defined by two nodal lines i and j. As stated in the introduction, in the present method, we employ the equilibrium equations of this cylindrical shell to obtain the pertinent displacement function, instead of using the more common arbitrary polynomial forms. By assuming that the panels are to be freely supported ($V = W = 0$) along their curved edges, the displacements are periodic functions of x, and therefore, they may be developed into a Fourier series as follows:

$$\{U(x,\theta),\ W(x,\theta),\ V(x,\theta)\}^T = \sum_{m=1}^{\infty} \left[T_m\right] \{U_m(\theta),\ W_m(\theta),\ V_m(\theta)\}^T \qquad (7)$$

where m is the axial wave number and $[T_m]$ is a 3 x 3 square diagonal matrix given in Appendix A-2. U_m, W_m, V_m are the magnitudes of the deflections and depend on θ only.

Upon substituting equation (7) into equation (6), we obtain three ordinary differential equations in U_m, W_m and V_m. Solutions of these equations have the general form [8]:

$$U_m(\theta) = \bar{A}\ e^{\eta\theta} \qquad V_m(\theta) = \bar{B}\ e^{\eta\theta} \qquad W_m(\theta) = \bar{C}\ e^{\eta\theta} \qquad (8)$$

where η is a complex number.

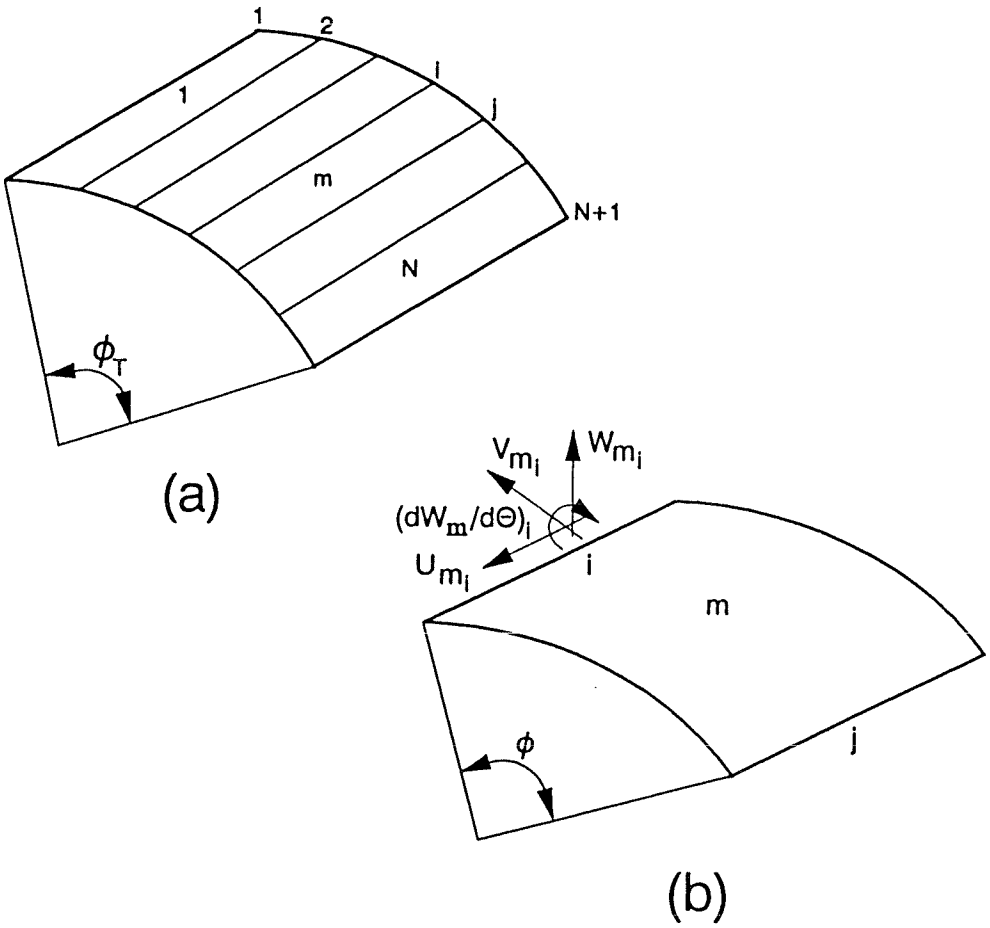

Figure 2: (a) Finite element idealization

(b) Nodal displacements at note i for the finite element m.

N: number of finite elements.ns (6) yield three ordinary linear

The substitution of equation (8) into equations yield three ordinary linear equations in $\bar{A}$, $\bar{B}$ and $\bar{C}$ of the form:

$$[H] \begin{Bmatrix} \bar{A} \\ \bar{B} \\ \bar{C} \end{Bmatrix} = \{0\} \tag{9}$$

For a non-trivial solution of (9), the determination of [H] must vanish yielding the following characteristic equation:

$$h_8\, \eta^8 + h_6\, \eta^6 + h_4\, \eta^4 + h_2\, \eta^2 + h_0 = 0 \tag{10}$$

The expressions for [H] and hi are given in Appendix A-2.

Equation (10) provides for eight complex roots, the complete solution is a linear combination of these eight solutions:

$$\begin{aligned} U_m(\theta) &= \sum_{i=1}^{8} \bar{A}_i\, e^{\eta_i \theta} \\ V_m(\theta) &= \sum_{i=1}^{8} \bar{B}_i\, e^{\eta_i \theta} \\ W_m(\theta) &= \sum_{i=1}^{8} \bar{C}_i\, e^{\eta_i \theta} \end{aligned} \tag{11}$$

$\bar{A}_i$, $\bar{B}_i$ and $\bar{C}_i$ are not independent, we shall next express the $\bar{A}_i$ and $\bar{B}_i$ in terms of $\bar{C}_i$ as:

$$\bar{A}_i = \alpha_i \bar{C}_i \qquad \bar{B}_i = \beta_i \bar{C}_i \qquad i = 1,2,\ldots 8 \tag{12}$$

where α_i and β_i are complex. Substituting equation (12) into equation (9), we may now determine α_i and β_i by solving the simple Cramer system:

$$\begin{bmatrix} H_{11} & H_{12} \\ H_{21} & H_{22} \end{bmatrix} \begin{Bmatrix} \alpha_i \\ \beta_i \end{Bmatrix} = \begin{Bmatrix} -H_{13} \\ -H_{23} \end{Bmatrix} \tag{13}$$

H_{ij} are the terms of matrix [H] given in Appendix A-2.

The final form of U, V and W may be written as:

$$\begin{Bmatrix} U \\ W \\ V \end{Bmatrix} = [T_m]\ [R]\ \{\ C\ \} \tag{14}$$

where $[T_m]$ and [R] are shown in Appendix A-2 and $\{C\} = \{C_1, \ldots, C_8\}^T$ is a set of constants. The C_i (i = 1,8) are the only free constants in our problem and must be determined from eight boundary conditions, four at each edge of constant θ.

We are now in position to specify the displacement function. At each node in Figure 2, the axial, circumferential and radial displacements, as well as a rotation, will be prescribed. The displacement of node i can thus be defined by the vector:

$$\{\delta_i\} = \left\{ U_{mi}, W_{mi}, \left(\frac{dW_m}{d\theta}\right)_i, V_{mi} \right\}^T \tag{15}$$

where all these components represent amplitudes of U,V, W and dW/dθ associated with the m th axial wave number. The element, having two nodes and eight degrees of freedom, will have the following nodal displacements:

$$\begin{Bmatrix} \delta_i \\ \delta_j \end{Bmatrix} = \left\{ U_{mi}\ W_{mi} \left(\frac{dW_n}{d\theta}\right)_i V_{mi}\ U_{mj}\ W_{mj} \left(\frac{dW_m}{d\theta}\right)_j V_{mj} \right\}^T = [A]\{C\} \tag{16}$$

where [A] is given in Appendix A-2, the terms of [A] being obtained from the terms of [R].

Now, pre-multiplying by $[A^{-1}]$, we obtain:

$$\{C\} = [A^{-1}] \begin{Bmatrix} \delta_i \\ \delta_j \end{Bmatrix} \tag{17}$$

and substituting into equation (14), we obtain:

$$\begin{Bmatrix} U \\ W \\ V \end{Bmatrix} = [T]\ [R]\ [A^{-1}] \begin{Bmatrix} \delta_i \\ \delta_j \end{Bmatrix} \tag{18}$$

The displacement function is defined by:

$$[N] = [T]\,[R]\,[A^{-1}] \tag{19}$$

4. STRESS VECTOR

The strain vector may be found by using equations (2) and (18):

$$\{\epsilon\} = \begin{bmatrix} [T_m] & [0] \\ [0] & [T_m] \end{bmatrix} [Q]\,[A^{-1}] \begin{Bmatrix} \delta_i \\ \delta_j \end{Bmatrix} = [B] \begin{Bmatrix} \delta_i \\ \delta_j \end{Bmatrix} \tag{20}$$

where the matrices [T], [A] and [Q] are given in Appendix (A-2).

Referring to equation (3), the stress vector is given as:

$$\{\sigma\} = [P]\,\{\epsilon\} = [P]\,[B] \begin{Bmatrix} \delta_i \\ \delta_j \end{Bmatrix} \tag{21}$$

5. MASS AND STIFFNESS MATRICES FOR ONE FINITE ELEMENT

Following the framework of the finite element approach [45], the mass and stiffness matrices may be expressed as:

$$[m] = \rho t \int_{o}^{L} \int_{o}^{\phi} [N]^T [N] \, dA \tag{22}$$

$$[k] = \int_{0}^{L} \int_{0}^{\phi} [B]^T [P] [B] \, dA \tag{23}$$

where $dA = rdxd\theta$. Here, [N], [B] and [P] are defined in equations (19), (20) and (3). Using these equations in equations (22), (23) and integrating over x and θ, we obtain:

$$[m] = [A^{-1}]^T [S] [A^{-1}] \tag{24}$$

$$[k] = [A^{-1}]^T [G] [A^{-1}] \tag{25}$$

where [S] and [G] are defined by the above equations:

$$S(i,j) = \frac{RL}{2} \frac{(\alpha_i \alpha_j + \beta_i \beta_j + 1)}{(\eta_i + \eta_j)} (e^{(\eta_i+\eta_j)\phi} - 1) \quad \text{if } \eta_i + \eta_j = 0 \tag{26}$$

$$S(i,j) = \frac{RL\ \phi}{2} (\alpha_i \alpha_j + \beta_i \beta_j + 1) \quad \text{if } \eta_i + \eta_j = 0 \tag{27}$$

$$\begin{aligned} G(i,j) = \frac{RL}{2} (&P_{11} A_i A_j + P_{12} A_i B_j + P_{14} A_i D_j + P_{15} A_i E_j \\ &+ P_{21} B_i A_j + P_{22} B_i B_j + P_{24} B_i D_j + P_{25} B_i E_j \\ &+ P_{41} D_i A_j + P_{42} D_i B_j + P_{44} D_i D_j + P_{45} D_i E_j \\ &+ P_{51} E_i A_j + P_{52} E_i B_j + P_{54} E_i D_j + P_{55} E_i E_j \\ &+ P_{33} C_i C_j + P_{36} C_i F_j + P_{63} F_i C_j + P_{66} F_i F_j) \\ &\frac{(e^{(\eta_i + \eta_j)\phi} - 1}{(\eta_i + \eta_j)} \quad \text{if } \eta_i + \eta_j \neq 0 \end{aligned} \tag{28}$$

$$G(i,j) = \frac{RL\ \phi}{2} (P_{11} A_i A_j + \ldots\ldots + P_{66} F_i F_j) \quad \text{if } \eta_i + \eta_j = 0 \tag{29}$$

The terms A_i, B_i, C_i, D_i, E_i and F_i ($i = 1, \ldots, 8$) may be expressed as follows:

$$A_i = -\frac{m\ \pi\ \alpha_i}{L}, \tag{30}$$

$$B_i = -\frac{\eta_i \beta_i + 1}{R}, \tag{31}$$

$$C_i = -\frac{m \pi \beta_i}{L} + \frac{\eta_i \alpha_i}{R} \tag{32}$$

$$D_i = -\frac{(m \pi)^2}{L^2}, \tag{33}$$

$$E_i = -\frac{\eta_i^2 + \eta_i \beta_i}{R^2} \tag{34}$$

and

$$F_i = -\frac{2 m \pi \eta_i}{RL} + \frac{3 m \pi \beta_i}{2 RL} - \frac{\eta_i \alpha_i}{2R^2} \tag{35}$$

6. THE GLOBAL MASS AND STIFFNESS MATRICES

The complete shell or panel is divided into finite elements each of which is a cylindrical segment panel. The position of the nodal points (nodal lines) may be chosen arbitrarily. With the mass and stiffness matrices known of each element, the global mass and stiffness matrices for the whole structure, M and K, respectively, may be constructed by superposition in the normal manner. Each of these square matrices will be of order 4(N+1), where N is the total number of finite elements (see Figure 2).

If the panel has in the straight edges constraints such as simply-supported, clamped, etc., the appropriate lines and columns in [M] and [K] are deleted to satisfy these constraints. Consequently, matrices [M] and [K] reduce to square matrices of order $4(N+1)-J$, where J is the number of constraints applied. Thus, for a closed cylindrical shell, free simply supported along its curved edges, no specification of boundary conditions need be made and $J = 0$. For this case we connect the last node of the structure to the first node with the total angle ϕ_T equal 360°. For a panel with two straight edges clamped we have $J = 8$.

7. ANALYSIS OF AN OPEN SHELLS SUBJECTED TO STATIC LOADS

The study of the static equilibrium is carried out in the following manner:

When: $\{F_A\}$ is the vector of the forces applied to the nodes of the shell

$\{F_B\}$ is the vector of unknown reactions

$\{\delta_A\}$ is the vector of unknown nodal displacements

$\{\delta_B\}$ is the vector of displacements defined by the boundary conditions

The static equilibrium equation $[K]\{\delta\} = \{F\}$ becomes

$$\begin{bmatrix} K_{AA} & K_{AB} \\ K_{BA} & K_{BB} \end{bmatrix} \begin{Bmatrix} \delta_A \\ \delta_B \end{Bmatrix} = \begin{Bmatrix} F_A \\ F_B \end{Bmatrix} \tag{36}$$

We have therefore

$$\begin{aligned} \{\delta_A\} &= [K_{AA}]^{-1} (\{F_A\} - [K_{AB}] \{\delta_B\}) \\ \{F_B\} &= [K_{BA}] \{\delta_A\} + [K_{BB}] \{\delta_B\} \end{aligned} \tag{37}$$

Finally, the stresses can then be found from the displacements by relation (21).

8. FREE VIBRATIONS

In the case of free vibrations, the equations of motion are:

$$[M] \{\ddot{\delta}\}_T + [K] \{\delta\}_T = \{0\} \tag{38}$$

where [M] and [K] are the global mass and stiffness matrices, $\{\delta_T\}$ is the vector for the global displacements of the whole shell.

$$\{\delta_T\} = \{\delta_1 , \delta_2 , ..., \delta_{N+1}\}^T$$

N being the number of finite elements.

By specifying:

$$\{\delta_T\} = \{\delta_o\}_T \sin(\omega t + \psi) \tag{39}$$

where ω is the natural angular frequency and ψ is the phase angle.

By introducing equation (39) in (38), we obtain

$$([K] - \omega^2[M])\ \{\delta_0\}_T = 0 \tag{40}$$

This relation holds only for certain values of ω where the determinant of the matrix in parentheses is zero. These values define the natural angular frequencies of the structure and give rise to a typical problem of eigenvalues and eigenvectors.

$$\det\ [[K] - \omega^2[M\ ]] = 0 \tag{41}$$

9. CALCULATIONS AND DISCUSSION

9.1 Convergence of the method

A first set of calculations was undertaken to determine the requisite number of finite elements for a precise determination of natural frequencies. Calculations were made for the same panel with the number of finite elements N = 2, 4, 6, 8, 10. The data for the panel are as follows : R = 2.286 m, t = 0.01143 m, L = 1.143 m, ϕ_T = 30°, E = 193.26 GPa, ν = 0.3 and ρ = 7933 kg/m^3, the boundary conditions are clamped at the straight edges and free simply-supported in the curved edges. The results for m = 2,10 and n = 1,2 are shown in Table 1. We conclude that the convergence of the system demands 6 finite elements for both the low and the high modes.

Table 1

Convergence study for increasing number of finite element (N) for m = 2, 10 and n = 1,2

Frequency [Hz] \ N	2	4	6	8	10
m = 2, n = 1	313.8	298.1	288.9	286.8	286.2
m = 2, n = 2	407.0	307.5	299.1	296.8	296.1
m = 10, n = 1	2310	2244	2133	2105	2098
m = 10, n = 2	3435	2305	2199	2166	2158

9.2 Calculations for uniform panels and shells

The eigenvalues of a uniform shell may unquestionably be calculated by simpler methods than these. Our main aim here is to test the correctness of the mass and stiffness matrices in their general form as developed in this paper.

(a) The first calculation involves the determination of the natural frequencies of a particular panel, having its straight edges free and the others free simply-supported.

The data of the panel are as follows : $\phi_T = 60°$, L = 20 cm, R = 10 cm, t = 0.1 cm, E = 210 GPa, $\nu = 0.3$ and $\rho = 7800$ kg/m^3.

As may be seen in Table 2, our results are in fairly good agreement with other theories and with experiments

.

Table 2
Frequency (Hz) of cylindrical panel having its straight edges free and the others free simply-supported

(m,n)	Theory [32]	Experimental [32]	Present method
(1, 1)	299	300	286
(1, 2)	474	470	476
(1, 3)	1530	1490	1486
(2, 1)	860	870	859
(2, 2)	840	850	819
(3, 2)	1320	1330	1341
(3, 3)	1450	1460	1440

(b) The second calculation involves the determination of natural frequencies of a particular simply-supported closed shell which has been analysed by Michalopoulos and Muster [46], Baron and Bleich [47], Lakis and Paidoussis [33] and many others.

The data for the shell are as follows : R = 103.6 mm, t = 1.194 mm, L = 471 mm, $\phi_T = 360°$, E = 207 GPa, $\nu = 0.3$, $\rho = 7790$ kg/m^3.

The natural frequencies of this shell for n = 0 to 5 and m = 1 are shown in Table 3. The results obtained by our method were calculated using 10 equal finite elements. As may be seen, the results obtained by this method are in good agreement with those from other theories.

Table 3
Natural frequencies, in Hz, for a particular uniform closed shell, as calculated by various theories (m = 1)

n	Michalopoulos and Muster [46]	Baron and Bleich [47]	Lakis and Paidoussis [33]	Present method
0	3384	3540	3398*	3385
1	1775	1920	1790*	1777
2	750	760	752	750
3	436	435	436	435
4	467	463	468	468
5	675	670	678	675

* Lakis and Sinno [37]

9.3 Calculations for orthotropic shell and panel

This example illustrates that of the hybrid finite element method developed in this paper can be used with success for an orthotropic closed or open cylindrical shell.

The data for the shell are the same as for the panel except the total angle ϕ_T. $\phi_T = 360°$ for closed shell and $\phi_T = 90°$ for the panel described in Figures 3 and 4.

For $n = 1$ (beam bending mode) and long axial wave lengths, the frequency parameters are asymptotic to those of beams according to the Euler-Bernouilli theory [32]. This asymptotic behavior is shown in Figure 3 for the case when $E_\theta/E_x > 1$.

The results for an open cylindrical shell are given in Figure 4 for different axial and circumferential modes. This figure shows that the small axial wave length 'mR/L' has little effect on the frequency. This effect decreases when the circumferential mode increases.

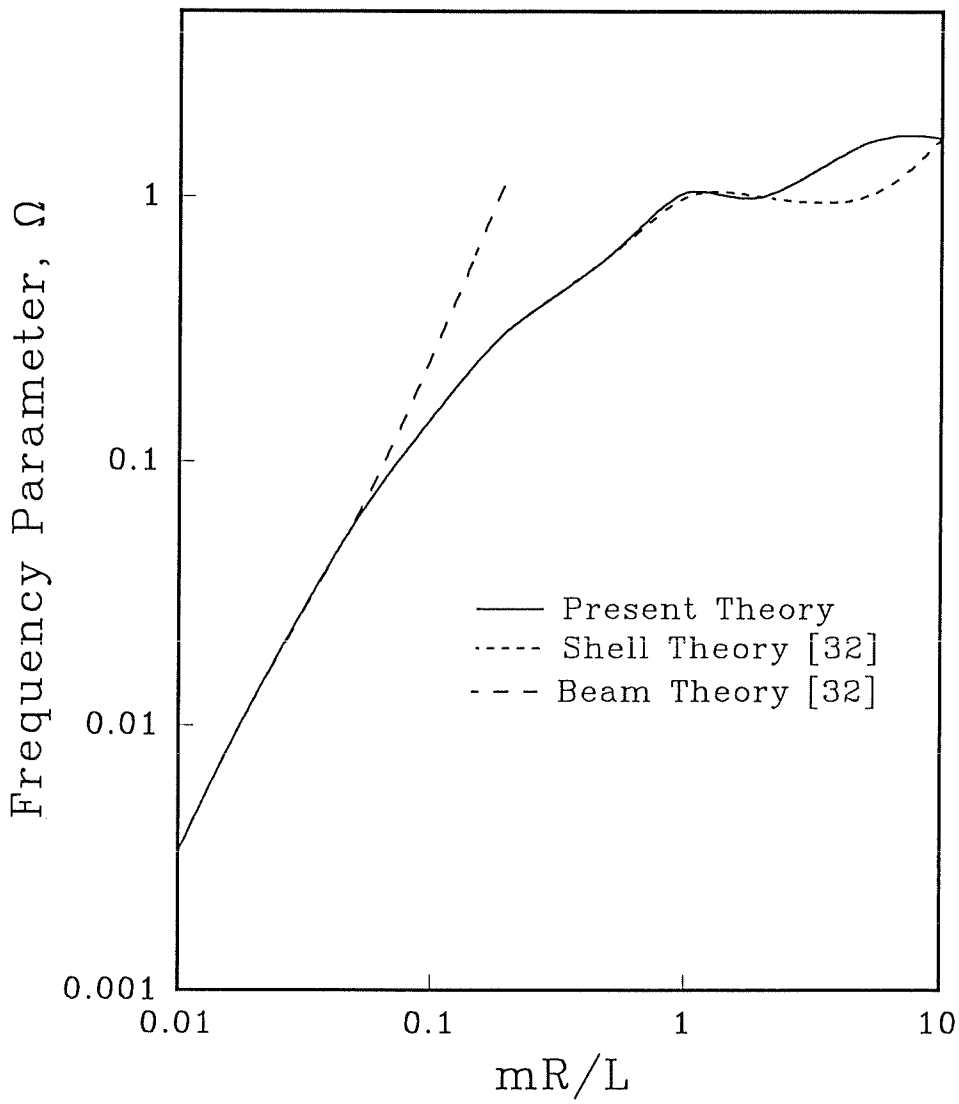

Figure 3. Frequency parameters for the beam-type mode (n=1) of simply-supported orthotropic closed cylindrical shells

$R/t = 1000,\ E_\theta/E_x = 24.2,\ G/E_x = 0.527,\ \nu_\theta = 0.527$

$$\Omega = \omega R\sqrt{\rho\ (1-\nu_x\nu_\theta)/E_x}$$

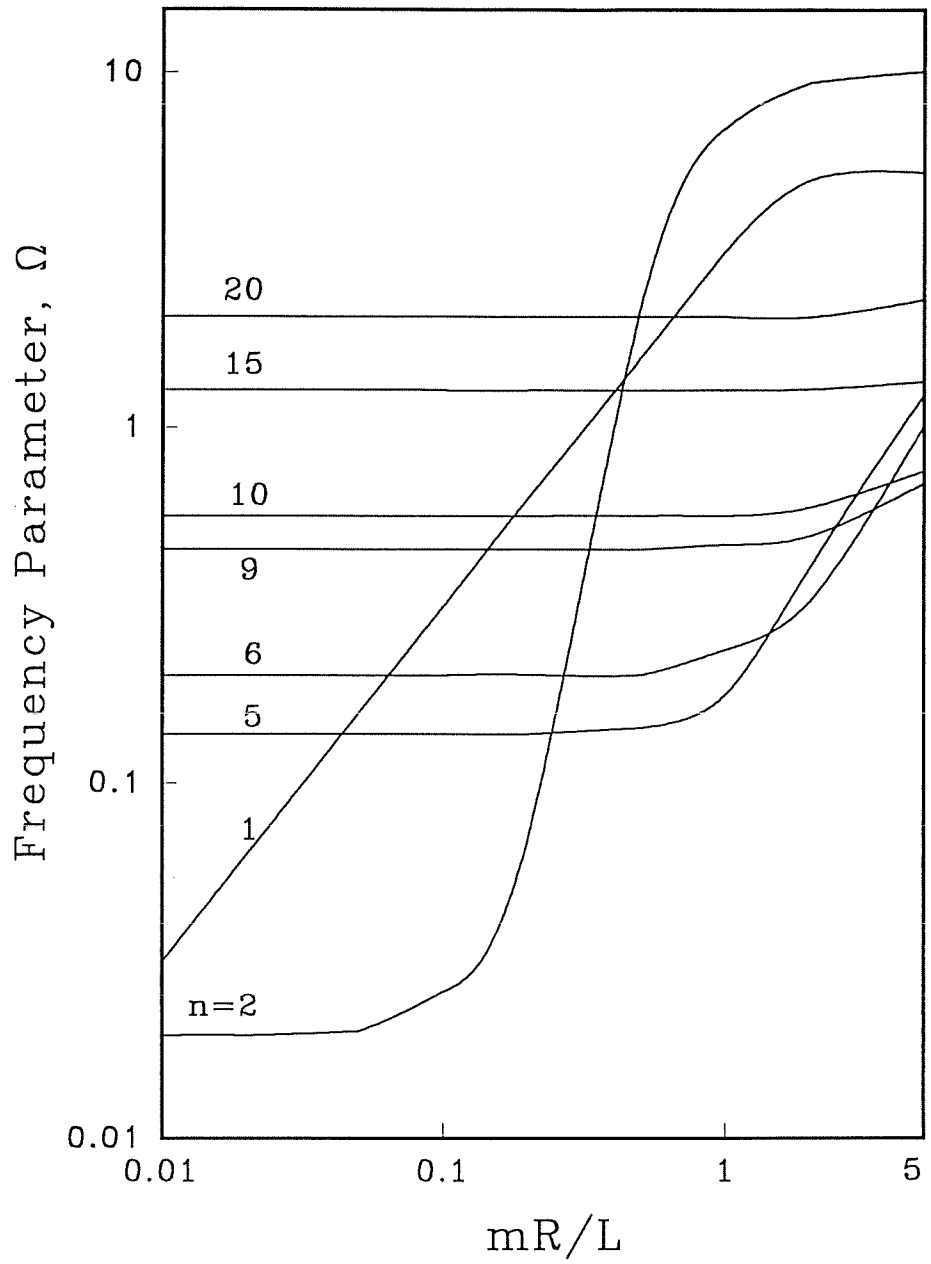

Figure 4. Variation of frequency parameter with mR/L for an orthotropic open cylindrical shell; having its straight edges free and the others free simply-supported.

$\phi_T = 90°$, R/h = 1000, $E_\theta/E_x = 24.2$, $G/E_x = 0.527$, $\nu_\theta = 0.527$, $n \geq 1$

$$\Omega = \omega R \sqrt{\rho\ (1-\nu_x \nu_\theta)/E_x}$$

9.4 Calculations for shells having circumferentially varying thickness :

The present method has been applied to a cylinder whose inner bore is circular but non-concentric with circular outer surface (figure 5). This case was studied by Tonin and Bies [24] using the Rayleigh-Ritz method.

The steel cylinder is free simply supported at both ends, and the data for this analysis are as follows :

$a^- = 37.83$ mm, $a^+ = 40.75$ mm, $a = 39.29$ mm, $L = 398.8$ mm, and the eccentricity e was studied for three values $e = 0, 0.5, 1$. The effect of the eccentricity on the calculated natural frequencies for various modes is detailed in Table 4. Note that the effect of increasing eccentricity is to lower the frequencies of the shell.

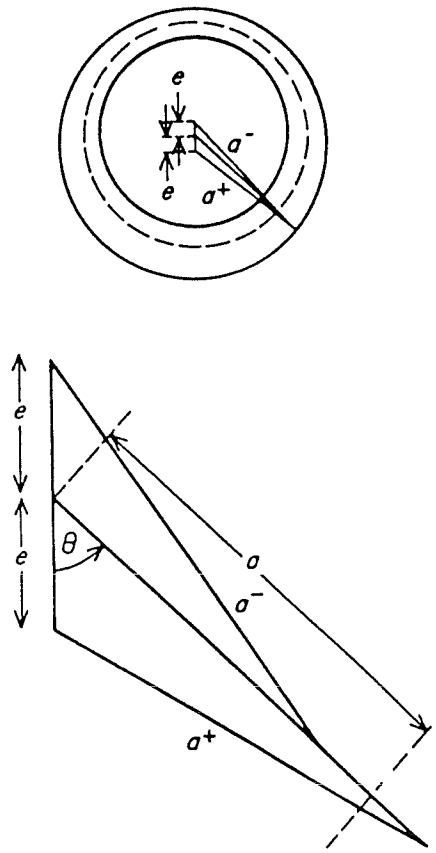

Figure 5. Geometry of the distortion

Table 4

Variation of natural frequencies (Hz) of some modes with varying distortion

m, n	e = 0		e = 0.5			e = 1	
	TONIN and BIES [24]	present method	[24]	Experimental [24]	present method	[24]	present method
1,2	1340	1341	1347	1330	1343	1302	1303
1,3	3553	3540	3420	3442	3410	3060	2949
1,4	6773	6758	6510	6495	6479	6177	5499
2,2	2105	2090	2071	2063	2062	1955	1954
2,3	3740	3728	3605	3627	3596	3243	3132
2,4	6905	6890	6638	6617	6607	6308	5618
3,2	3598	3568	3542	3463	3518	3302	3253
3,3	4204	4188	4083	4085	4071	3816	3743
3,4	7159	7144	6890	6861	6860	6575	5869

10. CONCLUSIONS

A method based on Sanders' equations for thin shells and making use of the finite element method has been formulated for the static and dynamic analysis of thin, elastic, anisotropic and non-uniform open cylindrical shells. The extensional and bending stiffnesses of the structures have been taken into account.

A new panel finite element was developed, making possible the derivation of the displacement functions from the equation of motion of the shell. Mass and stiffness matrices were also determined by analytical integration. The convergence of the method was established and the natural frequencies were obtained for different shells and panels. These were compared with the results of other investigations and satisfactory agreement was obtained.

This method combines the advanges of finite element analysis and the precision of formulation which the use of displacement functions derived from shell theory contributes.

Only a few cases have been presented here; a sufficient number, the authors believe, to illustrate the capabilities of the method. Several other cases could also have been tackled, but were not because of the volume of the paper.

A paper currently under preparation will deal with liquid-filled open and closed cylindrical shells. The dynamic stability of shells containing flowing fluid will also be analysed. Further work is under way to deal with the non-linear dynamic analysis of an open cylindrical shell containing flowing fluid.

REFERENCES

[1] LOVE, A.E.H., "A Treatise on the Mathematical Theory of Elasticity," Dover Publications Inc., New York, 1944.

[2] REISSNER, E., "A New Derivation of the Equations for the Deformation of Elastic Shells," Amer. J. Math. 63, pp. 177-184, 1941.

[3] VLASOV, V.S., "Basic Differential Equations in General Theory of Elastic Shells," NACA, Technical Memorandum 1241, February, 1951.

[4] NAGHDI, P.M., "On the Theory of Thin Elastic Shells," Quart. Appl. Math., vol. 14, pp. 369-380, 1957.

[5] SANDERS, J.L., "An Improved First Approximation Theory for Thin Shells," NASA, TR-R24, 1959.

[6] KOITIER, W.T., "A Consistent First Approximation in the General Theory of Thin Elastic Shells," Proc. Sym. on Theory of Thing Elastic Shells, Amsterdam, North Holland, pp. 12-33, 1960.

[7] KRAUS, H., "Thin Elastic Shells," John Wiley and Sons, New York, 1967.

[8] FLÜGGE, W., "Stress in Shells," 2nd Edition, Springer-Verlag, Berling, 1973.

[9] BOGNER, F.K., FOX, R.L. and SHMIT, L.A., "A Cylindrical Shell Discrete Element," AIAA Journal, Vol. 5, No. 4, pp. 745-750, 1967.

[10] CANTIN, G. and CLOUGH, R.W., "A Curved, Cylindrical-Shell Finite Element," AIAA Journal Vol. 6, No. 6, pp. 1057-1062, 1968.

[11] OLSON, M.D. and LINDBERG, G.M., "A Finite Cylindrical Shell Element and the Vibrations of a Curved Fan Blade," NRCA, Aeronautical Report, LR=497, Ottawa, 1968.

[12] BREBBIA, C.A. and NATH, J.M.D., "A Comparaison of Recent Shallow Shell Finite-Element Analysis," Int. J. Mech. Sci., Vol. 12, pp. 849-857, 1970.

[13] PETYT, M., "Vibration of Curved Plates," J. of Sound and Vib., Vol. 15(3), pp. 381-395, 1971.

[14] OLSEN, M.D. and LINDBERG, G.M., "Dynamic Analysis of Shallow Shells with a Doubly-Curved Triangular Finite Element," J. of Sound and Vib., Vol. 19(3), pp. 299-318, 1971.

[15] SABIR, A.B. and LOCK, A.C., "A Curved, Cylindrical Shell, Finite Element," Int. J. Mech. Sci., Vol. 14, pp. 125-135, 1972.

[16] MUSTAPHA, B.A.J. and ALI, R., "Prediction of Natural Frequency of Vibration of Stiffened Cylindrical Shells and Orthogonally Stiffened Curved Panels," J. of Sound and Vib., Vol. 113(2), pp. 317-327, 1987.

[17] BOYD, D.E., "Analysis of Open Noncircular Cylindrical Shells," AIAA Journal, Vol. 7, No. 3, pp. 563-565, 1969.

[18] KURT, C.E. and BOYD, D.E., "Free Vibrations of Noncircular Cylindrical Shell Segments," AIAA Journal, Vol. 9, No. 2, pp. 239-244, 1971.

[19] SRINIVASAN, R.S. and BOBBY, W., "Free Vibration of Non-Circular Cylindrical Shell Panels," J. of Sound and Vib., Vol. 46(1), pp. 43-49, 1976.

[20] MASSALAS, C., SOLDATOS, K. and TZIVANIDIS, G., "Free Vibrations of Non-Circular Panels with Arbitrary Boundary Conditions," J. of Sound and Vib., vol. 69(3), pp. 491-495, 1980.

[21] BLEVINS, R.D., "Natural Frequencies of Shallow Cylindrically Curved Panels," J. of Sound and Vib., 75(1), pp. 145-149, 1981.

[22] SEWALL, J.L., "Vibrations Analysis of Cylindrically Curved Panels with Simply Supported of Clamped Edges and Comparaison with some Experiments," NASA, TN, D-3791, 1967.

[23] LEISSA, A.W., LEE, J.K. and WANG, A.J., "Vibrations of Cantilivered Shallow Cylindrical Shells of Rectangular Planform," J. of Sound and Vib., Vol. 78(3) pp. 311-328, 1981.

[24] TONIN, R.F. and BIES, D.A., "Free Vibration of Circular Cylinders of Variable Thickness" J. of Sound and Vib., Vol. 62(2), pp. 165-180, 1979.

[25] SUZUKI, K. and LEISSA, A.W., "Free Vibrations of Non-Circular Cylindrical Shells Having Circumferentially Varying Thickness," J. Appl. Mech., Vol. 52, pp. 149-154, 1985.

[26] SUZUKI, K. and LEISSA, A.W., "Exact Solutions for the Free Vibrations of Open Cylindrical Shells with Circumferentially Varyins Curvature and Thickness, " J. of Sound and Vib., Vol. 107(1), pp. 1-15, 1986.

[27] SRINIVASAN, R.S. and KRISHNAN, P.A., "Vibration of Cylindrical Shell Panels," J. of Sound and Vib., Vol. 114(3), pp. 583-587, 1987.

[28] CHEUNG, Y.K., LI, W.Y. and THAM, L.G., "Free Vibration Analysis of Singly Curved Shell by Spline Finite Strip Method", J. of Sound Vib., Vol. 128(3), pp. 411-422, 1989.

[29] KUMAR, V. and SINGH, A.V., "Vibration Analysis of Non-Circular Cylindrical Shells Using Bezier Functions", J. of Sound and Vib., Vol. 161(2), pp. 333-354, 1993.

[30] JIANG, J. and OLSEN, M.D., "Vibration Analysis of Orthogonally Stiffness Cylindrical Shells Using Super Finite Elements" J. of Sound and Vib., Vol. 173(1), pp. 73-83, 1994.

[31] LEISSA, A.W., "Vibration of Shells", NASA SP-288, 1973.

[32] HEKI, K., "Vibration of Cylindrical Shells", J. of the Inst. of Polytechniques, Osaka City Univ., Vol. 1(1), 1957.

[33] LAKIS, A.A. and PAIDOUSSIS, M.P., "Dynamic Analysis of Axially Non-Uniform Thin Cylindrical Shells", J. Mech. Eng. Science, Vol. 14, No. 1, pp. 49-71, 1972.

[34] LAKIS, A.A. and PAIDOUSSIS, M.P., "Free Vibration of Cylindrical Shells Partially Filled with Liquid," J. of Sound and Vib., Vol. 19, pp. 1-15, 1971.

[35] LAKIS, A.A and PAIDOUSSIS, M.P., "Predictions of the Response of a Cylindrical Shell to Arbitrary of Boundary Layer-Induced Random Pressure Field," J. of Sound and Vib., Vol. 25, pp. 1-27, 1972.

[36] LAKIS, A.A. and DORÉ, R., "General Method for Analysing Contact Stresses on Cylindrical Vessels," Int. J. Solids and Struct., Vol. 14, No. 6, pp. 499-516, 1978.

[37] LAKIS, A.A. and SINNO, M., "Free Vibration of Axisymmetric and Beam-Like Cylindrical Shells, Partially Filled With Liquid", Int. J. for Num. Meth. in Eng., Vol. 33, pp. 235-268, 1992.

[38] LAKIS, A.A., "Effects of Fluid Pressures on the Vibration Characteristics of Cylindrical Vessels", Proc. of the Int. Conf. on Pressure Surges, London, UK, pp. J1, 15, 1976.

[39] LAKIS, A.A., and LAVEAU, A., "Non-Linear Dynamic of Anisotropic Cylindrical Shells Containing a Flowing Fluid", Int. J. Solids and Struc., Vol. 28(9), pp. 1079-1094.1991.

[40] LAKIS, A.A, VAN DYKE, P. and OURICHE, H., "Dynamic Analysi of Anisotropic Fluid-Filled Conical Shells" J. of Fluids and Struc., Vol. 6, pp. 135-162, 1992.

[41] LAKIS, A.A., TUY, N.Q., and SELMANE, A., "Analysis of Axially Non-Uniform Thin Spherical Shells", Proc. of the Int. Symposium on Structural Analysis and Optimization, Paris, France, pp. 80-85, 1989.

[42] LAKIS, A.A., and SELMANE, A., "Analysis of Non-Uniform Circular and Annular Plates", Proc. of the Third Int. conf. on Numerical Methods in Engineering, Swansea, U-K, pp. 239-248, 1990.

[43] LAKIS, A.A., and SELMANE, A., "Hydrid Finite Element Analysis of Non-Uniform Circular and Annular Plates" Proc. of the Int. conf. on Advances in Structural Testing, Analysis and Design, Bangalor, India, pp. 499-505, 1990.

[44] AMBARTSUMYAN, S.A., "Theory of Anisotropic Shells", NASA TT F-118, 1961.

[45] ZIENKIEWICZ, A.C., "The Finite Element Method", McGraw-Hill, 1977.

[46] MICHALOPOULOS, C.D. and MUSTER, D., "The In-Vacuo Vibration of Simply Supported Ring-Stiffened, Mass-Loaded Cylindrical Shell", Proc. Symp. Theory Shells, 1967.

[47] BARON, M.L. and BLEICH, H.H., "Tables of Frequencies and Modes of Free Vibration of Infinitely long Thin Cylindrical Shells", J. Appl. Mech., Vol. 21, pp. 178, 1954.

APPENDIX A-1

EQUATIONS OF MOTION

This appendix contains the equations of motion for a thin cylindrical anisotropic shell.

$$L_1\,(U,V,W,P_{ij}) = P_{11}\,\frac{\partial^2 U}{\partial x^2} + \frac{P_{12}}{R}\left(\frac{\partial^2 V}{\partial x\,\partial\theta} + \frac{\partial W}{\partial x}\right) - P_{14}\,\frac{\partial^3 W}{\partial x^3} +$$

$$\frac{P_{15}}{R^2}\left(\frac{\partial^3 W}{\partial x\,\partial\theta^2} + \frac{\partial^2 V}{\partial x\,\partial\theta}\right) + \left(\frac{P_{33}}{R} - \frac{P_{63}}{2R^2}\right)\left(\frac{\partial^2 V}{\partial x\,\partial\theta} + \frac{1}{R}\,\frac{\partial^2 U}{\partial\theta^2}\right) + \qquad (1)$$

$$\left(\frac{P_{36}}{R^2} - \frac{P_{66}}{2R^3}\right)\left(-\frac{2\partial^3 W}{\partial x\,\partial\theta^2} + \frac{3}{2}\,\frac{\theta^2 V}{\partial x\,\partial\theta} - \frac{1}{2}R\,\frac{\partial^2 U}{\partial\theta^2}\right)$$

$$L_2\,(U,V,W,P_{ij}) = \left(\frac{P_{21}}{R} + \frac{P_{51}}{R^2}\right)\left(\frac{\partial^2 U}{\partial x\,\partial\theta}\right) + \frac{1}{R}\left(\frac{P_{22}}{R} + \frac{P_{52}}{R^2}\right)$$

$$\left(\frac{\partial^2 V}{\partial\theta^2} + \frac{\partial W}{\partial\theta}\right) - \left(\frac{P_{24}}{R} + \frac{P_{54}}{R^2}\right)\left(\frac{\partial^3 W}{\partial x^2\,\partial\theta}\right) + \frac{1}{R^2}\,\frac{(P_{25}}{R} + \frac{P_{55}}{R^2}\Big)$$

$$\left(-\frac{\partial^3 W}{\partial\theta^3} + \frac{\partial^2 V}{\partial\theta^2}\right) + \left(P_{33} + \frac{3P_{63}}{2R}\right)\left(\frac{\partial^2 V}{\partial x^2} + \frac{\partial^2 U}{R\partial x\,\partial\theta}\right) + \qquad (2)$$

$$\frac{1}{R}\left(P_{36} + \frac{3P_{66}}{2R}\right)\left(-2\,\frac{\partial^3 W}{\partial x^2\,\partial\theta} + \frac{3}{2}\,\frac{\partial^2 V}{\partial x^2} - \frac{\partial^2 U}{2R\,\partial x\,\partial\theta}\right)$$

$$L_3\,(U,V,W,P_{ij}) = P_{41}\,\frac{\partial^3 U}{\partial x^3} + \frac{P_{42}}{R}\left(\frac{\partial^3 V}{\partial x^2\,\partial\theta} + \frac{\partial^2 W}{\partial x^2}\right) - P_{44}\,\frac{\partial^4 W}{\partial x^4} +$$

$$\frac{P_{45}}{R^2}\left(-\frac{\partial^4 W}{\partial x^2\,\partial\theta^2} + \frac{\partial^3 V}{\partial x^2\,\partial\theta}\right) + \frac{2\,P_{63}}{R}\left(\frac{\partial^3 U}{R\,\partial x\,\partial\theta^2} + \frac{\partial^3 V}{\partial x^2\,\partial\theta}\right) + \left(\frac{2P_{66}}{R^2}\right)$$

$$\left(-2\frac{\partial^4 W}{\partial x^2\partial\theta^2} + \frac{3}{2}\frac{\partial^3 V}{\partial x^2\,\partial\theta} - \frac{\partial^3 U}{2R\partial x\,\partial\theta^2}\right) + \frac{P_{51}}{R^2}\,\frac{\partial^3 U}{\partial x\,\partial\theta^2} + \frac{P_{52}}{R^3}\left(\frac{\partial^3 V}{\partial\theta^3} + \right. \qquad (3)$$

$$\left.\frac{\partial^2 W}{\partial\theta^2}\right) + \frac{P_{55}}{R^4}\left(-\frac{\partial^4 W}{\partial\theta^4} + \frac{\partial^3 V}{\partial\theta^3}\right) - \frac{P_{21}}{R}\,\frac{\partial U}{\partial x} - \frac{P_{54}}{R^2}\,\frac{\partial^4 W}{\partial x^2\,\partial\theta^2}$$

$$-\frac{P_{22}}{R^2}\left(\frac{\partial V}{\partial\theta} + W\right) + \frac{P_{24}}{R}\,\frac{\partial^2 W}{\partial\theta^2} - \frac{P_{25}}{R^3}\left(-\frac{\partial^2 W}{\partial\theta^2} + \frac{\partial V}{\partial\theta}\right)$$

APPENDIX A-2

Appendix A-2 contains the matrices referred to in the text which were too large to be included therein.

The matrices are listed as follows.

[H]	(See Table 5)
hi (i=0,2,4,6,8)	(See Table 6)
$[T_m]$	(See Table 7)
[R]	(See Table 8)
[A]	(See Table 9)
[Q]	(See Table 10)

Table 5 : Matrix $[H]_{3 \times 3}$

$$[H] \begin{Bmatrix} A \\ B \\ C \end{Bmatrix} = \{0\} \quad (9) \ ;$$

Where :

$$[H] = \begin{bmatrix} H_{11} & H_{12} & H_{13} \\ H_{21} & H_{22} & H_{23} \\ H_{31} & H_{32} & H_{33} \end{bmatrix}$$

$$H_{11} = -P_{11}\,\bar{m}^2 + \frac{\eta^2}{R^2}\left[P_{33} - \frac{1}{R}P_{36} + \frac{1}{4R^2}P_{66}\right]$$

$$H_{12} = \bar{m}\,\eta\left[\frac{1}{R}(P_{12} + P_{33}) + \frac{1}{R^2}(P_{15} + P_{36}) - \frac{3}{4R^2}P_{66}\right]$$

$$H_{13} = \frac{P_{12}}{R}\bar{m} + P_{14}\,\bar{m}^3 - \frac{\bar{m}}{R^2}\eta^2\left(P_{15} + 2P_{36} - \frac{1}{R}P_{66}\right)$$

$$H_{21} = H_{12}$$

$$H_{22} = \bar{m}^2\left(P_{33} + \frac{3}{R}P_{36} + \frac{9}{4R^2}P_{66}\right) - \frac{\eta^2}{R^2}\left(P_{22} + \frac{1}{R^2}P_{55} + \frac{2}{R}P_{25}\right)$$

$$H_{23} = -\frac{\eta}{R^2}\left(P_{22} + \frac{1}{R}P_{52}\right) + \frac{\eta^3}{R^3}\left(P_{25} + \frac{1}{R}P_{55}\right) - \frac{\eta\bar{m}^2}{R}\left(2P_{36} + P_{24} + \frac{3}{R}P_{66} + \frac{1}{R}P_{54}\right)$$

$$H_{31} = H_{13}$$

$$H_{32} = H_{23}$$

$$H_{33} = -\frac{1}{R^4}P_{55}\,\eta^4 + \frac{\eta^2}{R^2}\left[\frac{2}{R}P_{25} + \bar{m}^2\left(2P_{45} + 4P_{66}\right)\right]$$

and $\bar{m} = \dfrac{m\pi}{L}$

Table 6 : Characteristic Equation

$$h_8\,\eta^8 + h_6\,\eta^6 + h_4\,\eta^4 + h_2\,\eta^2 + h_0 = 0 \qquad (10)$$

where

$$h_8 = f_1\,f_6\,f_{10} - f_1\,f_8^2$$

$$h_6 = f_1\,f_6\,f_{11} + f_1\,f_7\,f_{10} - 2f_1\,f_8\,f_9 + f_2\,f_6\,f_{10} - f_2\,f_8^2 - f_3^2\,f_{10} + f_3\,f_8\,f_4 + f_4\,f_3\,f_8 - f_4^2\,f_6$$

$$h_4 = f_1\,f_6\,f_{12} + f_1\,f_7\,f_{11} - f_1\,f_9^2 + f_2\,f_6\,f_{11} + f_2\,f_7\,f_{10} - 2f_2\,f_8\,f_9 - f_3^2\,f_{11} + f_3\,f_9\,f_4 + f_3\,f_8\,f_5 + f_4\,f_3\,f_9 - f_4^2\,f_7 - f_4\,f_6\,f_5 + f_5\,f_3\,f_8 - f_5\,f_6\,f_4$$

$$h_2 = f_1\,f_7\,f_{12} + f_2\,f_6\,f_{12} + f_2\,f_7\,f_{11} - f_2\,f_9^2 - f_3^2\,f_{12} + f_3\,f_9\,f_5 - f_4\,f_7\,f_5 + f_5\,f_3\,f_9 - f_5\,f_7\,f_4 - f_5^2\,f_6$$

$$h_o = f_2\,f_7\,f_{12} - f_7\,f_5^2$$

The coefficients f_i (i = 1,12) are given by the above equations :

$$f_1 = \frac{1}{R}(P_{55} - \frac{1}{R} P_{36} + \frac{1}{4R^2} P_{66})$$

$$f_2 = - P_{11} \bar{m}^2$$

$$f_3 = \bar{m} \left[\frac{1}{R} (P_{12} + P_{13}) + \frac{1}{R^2} (P_{15} + P_{36}) - \frac{3}{4R^3} P_{66}\right]$$

$$f_4 = - \frac{\bar{m}}{R^2} (P_{15} + 2 P_{36} - \frac{1}{R} P_{66})$$

$$f_5 = \frac{P_{12}}{R} \bar{m} + P_{14} \bar{m}^3$$

$$f_6 = - \frac{1}{R^2} (P_{22} + \frac{1}{R^2} P_{55} + \frac{2}{R} P_{25})$$

$$f_7 = \bar{m} (P_{33} + \frac{3}{R} P_{36} + \frac{9}{4R^2} P_{66})$$

$$f_8 = \frac{1}{R^3} (P_{25} + \frac{1}{R} P_{55})$$

$$f_9 = - \frac{1}{R^2} (P_{22} + \frac{1}{R} P_{52}) - \frac{\bar{m}^2}{R} (2P_{36} + P_{24} + \frac{3}{R} P_{66} + \frac{1}{R} P_{54})$$

$$f_{10} = - \frac{1}{R^4} P_{55}$$

$$f_{11} = \frac{2}{R^3} P_{25} + \frac{\bar{m}}{R^2} (2P_{45} + 4P_{66})$$

$$f_{12} = - \frac{1}{R} P_{22} - \frac{2}{R} P_{24} \bar{m}^2 - P_{44} \bar{m}$$

and $\bar{m} = m \frac{\pi}{L}$

Table 7 : Matrix $[T_m]_{3 \times 3}$

$$[T_m] = \begin{bmatrix} \cos \frac{m \pi x}{L} & 0 & 0 \\ 0 & \sin \frac{m \pi x}{L} & 0 \\ 0 & 0 & \sin \frac{m \pi x}{L} \end{bmatrix}$$

Table 8 : Matrix $[R]_{3 \times 8}$

$$R\ (1,j) = \alpha_j\ e^{\eta_j \theta} \qquad j = 1,8$$
$$R\ (2,j) = e^{\eta_j \theta} \qquad j = 1,8$$
$$R\ (3,j) = \beta_j\ e^{\eta_j \theta} \qquad j = 1,8$$

Table 9 : Matrix $[A]_{8 \times 8}$

For $j = 1,8$

$$A(1,j) = \alpha_j$$
$$A(2,j) = 1$$
$$A(3,j) = \eta_j$$
$$A(4,j) = \beta_j$$
$$A(5,j) = \alpha_j\ e^{\eta_j \theta}$$
$$A(6,j) = e^{\eta_j \theta}$$
$$A(7,j) = \eta_j\ e^{\eta_j \theta}$$
$$A(8,j) = \beta_j\ e^{\eta_j \theta}$$

Table 10 : Matrix [Q] $_{6 \times 8}$

For $j = 1,8$

$$Q(1,j) = A_j \, e^{\eta_j \theta}$$
$$Q(2,j) = B_j \, e^{\eta_j \theta}$$
$$Q(3,j) = C_j \, e^{\eta_j \theta}$$
$$Q(4,j) = D_j \, e^{\eta_j \theta}$$
$$Q(5,j) = E_j \, e^{\eta_j \theta}$$
$$Q(6,j) = F_j \, e^{\eta_j \theta}$$

The terms A_j, B_j, C_j, D_j, E_j and F_j ($j = 1,8$) are given by equations (30) to (35).

APPENDIX A-3

NOMENCLATURE

LIST OF SYMBOLS

A_i , B_i , C_i , D_i , E_i , F_i ($i = 1, \ldots, 8$)	Defined by equations (30) to (35)
$\bar{A}$, $\bar{B}$, $\bar{C}$	Defined by equation (8)
$\bar{A}_i$, $\bar{B}_i$, $\bar{C}_i$	Defined by equation (11)
D	Membrane Stiffness
E	Young's modulus for isotropic shell
E_x, E_θ	Young's modulus for orthotropic shell
e	Distortion (figure 5)
f_i ($i = 1, 12$)	Defined in Appendix A-2, Table 6
G	Shear modulus
h_i	Coefficients of the characteristic equation (10), ($i = 0, 2, 4, 6, 8$)
K	Bending stiffness
L	Length of the shell
M_x, M_θ, $\bar{M}_{x\theta}$	Bending moments
m	Axial mode number

$\bar{m}$	Defined by $m\pi/L$
N	Number of finite elements
N_x, N_θ, $\bar{N}_{x\theta}$	Stress components
n	Circumferential mode number
Pij	Terms of eleasticity matrix (i = 1, ...6; j = 1, ...6)
R	Mean radius of the shell
t	Thickness of the shell
U, V, W	Axial, tangential and radial displacements
U_m , V_m , W_m	Amplitudes of U, V, W associated with m th axial mode number
x	Axial coordinate
α_i , β_i	Defined by equation (12)
η_i	Complex roots of the characteristic equation (10)
ϵ_x, ϵ_θ, $\bar{\epsilon}_{x\theta}$	Deformation of reference surface
κ_x, κ_θ, $\bar{\kappa}_{x\theta}$	Changes in curvature and torsion of reference surface
θ	Circumferential coordinate

ν	Poisson's ratio for isotropic shell
ν_x, ν_θ	Poisson's ratio for orthotropic shell
ϕ	Angle for one finite element
ϕ_T	Angle for the whole open shell
ω	Natural frequency (rad/s)
Ω	Nondimensional frequency, Figures 3 and 4
ρ	Density of the shell material

LIST OF MATRICES

[A]	Defined by equation (16)
[B]	Defined by equation (20)
{C}	Vector for arbitrary constants
[G]	Defined by equations (28) and (29)
[H]	Defined by equation (13)
[k]	Stiffness matrix for one finite element
[K]	Global stiffness matrix
[m]	Mass matrix for one finite element
[M]	Global mass matrix
[N]	Displacement function defined by equation (19)
[P]	Elasticity matrix
[Q]	Defined by equation (20)
[R]	Defined by equation (14)
[S]	Defined by equations (26) and (27)
$[T_m]$	Defined by equation (14)
$\{\epsilon\}$	Deformation vector
$\{\sigma\}$	Stress vector
$\{\delta_i\}$	Degrees of freedom at node i
$\{\delta_T\}$	Degrees of freedom for total shell

École Polytechnique de Montréal
C.P. 6079, Succ. Centre-ville
Montréal (Québec)
H3C 3A7